HUGHES

HUGHES AIRCRAFT COMPANY

ELECTRON DYNAMICS DIVISION

INDEX

HUGHES

HUGHES AIRCRAFT COMPANY

ELECTRON DYNAMICS DIVISION

INDEX

ITEM	DATE
TAB – INDEX	
Index	11/83
TAB – CATALOG	
TWT/TWTA Catalog	1/81
TAB – TRAVELING–WAVE TUBE PRODUCTS	
173H	7/75
214H	11/71
219H	11/71
230H	2/79
240H	11/71
244H	3/79
246H, 8510H, 8511H	2/81
249H	3/79
254H	7/72
261H	7/74
262H	5/74
263H	5/71
265H	11/71
271H	12/74
272H	12/74
275H	3/82
276H	7/75
277H	12/74
278H	9/78
280H	8/76
285H	12/72
287H	4/73
291H	6/83
293H	11/76
294H	7/75
296H	12/74
298H	8/76
307H	7/71
308H	11/73
312H	5/71
340H	3/73

ITEM	DATE
TAB – TRAVELING–WAVE TUBE PRODUCTS (CONTINUED)	
414H	11/71
551H	7/75
554H	12/72
555H	2/82
559H	10/75
614H	7/73
621H	8/73
622H	9/77
634H	8/73
635H	8/73
641H	12/74
710H	12/72
719H	8/73
745H	8/73
750H	7/75
751H	2/82
752H	7/75
756H	7/74
760H	8/73
767H	7/75
774H	9/75
781H	8/77
786H	9/73
792H	7/75
796H	8/73
820H	8/73
830H	8/73
835H	9/73
837H	11/71
837HA	4/74
837HC	3/82
837HD	2/76
845H	9/78
851H	7/72
854H	7/74
861H	8/73
866H	8/76
870H	11/76
874H	5/79
8281H	6/80
8507H	8/81
8508H	8/81
8702H	5/74

HUGHES

HUGHES AIRCRAFT COMPANY

ELECTRON DYNAMICS DIVISION

INDEX

ITEM — DATE

TAB – TRAVELING–WAVE TUBE PRODUCTS (CONTINUED)

8713H. . . . 2/82
8722H. . . . 3/80
8742H. . . . 10/77
8754H. . . . 3/80
8760H. . . . 9/76
8774H. . . . 11/82
1160H. . . . 3/73
1190H. . . . 11/71
1202H. . . . 7/72
1220H. . . . 3/73
1224H. . . . 3/73
1230H. . . . 1/76
1238H. . . . 11/76
1240H. . . . 1/76
1243H. . . . 7/78
1244H. . . . 3/82
1247H. . . . 9/78
1248H. . . . 3/82
1264H. . . . 2/79
1266H. . . . 7/78
1268H. . . . 9/78
1288H. . . . 3/82
1292H. . . . 1/76
1294H. . . . 3/82
1652H. . . . 10/83
1653H. . . . 10/83
1654H. . . . 10/83
1655H. . . . 10/83
Commercial TWTs. . . . 7/80
Multi-Band Commercial TWTs 11/79

TAB – TWT INSTRUMENTATION AMPLIFIER PRODUCTS

Hughes Traveling-Wave Tube Amplifiers Brochure 1980
1077H11 . . . . 11/79
1077H12 . . . . 6/80
Standard Band 10W TWT Amplifiers 1177H Series 5/82
Multi-Band 10-20W TWT Amplifiers 1177H Series. . . . 5/82
1216H. . . . 12/72
1233H, 1234H, 1235H and 1236H 8/73
1277H. . . . 8/79
Domestic Sales Price List TWT Power Amplifiers. . . . 3/83
Domestic Sales Option List 1077H, 1177H and 1277H Series TWT Amplifiers 4/82

ITEM **DATE**

TAB – SOLID STATE MILLIMETER-WAVE PRODUCTS

Solid State Millimeter-Wave Products Catalog 1/83

Test Instruments
Millimeter-Wave Synthesizer
Automatic Scalar Network Analyzers
Plug-in Sweep Generators
Plug-in Sweep Generators with AFC
Adjustable Sweep Sources
Modulator/Leveling Loops
Direct Reading Phase Shifters
Direct Reading Frequency Meters
Direct Reading Attenuators
Temperature Compensated Thermistor Mounts

IMPATT Products
Pulsed IMPATT Power Sources
Short Pulse Injection Locked Amplifiers
Long Pulse Injection Locked Amplifiers
Micrometer Tuned IMPATT Sources
CW IMPATT Sources
IMPATT Phase-locked Oscillators
CW Injection Locked Amplifiers
IMPATT Diodes

Gunn Products
Gunn Diodes
Gunn Oscillators
Gunn Phase-locked Oscillators

Mixers & Detectors & PIN Switches
Balanced Mixers – IF Preamplifiers
Single Ended Mixers
Harmonic Mixers
Spectrum Analyzer Mixers
Tunable and Flat Broadband Detectors
Balanced Phase Detectors
Single Sideband Up-Converters
Broadband SPST & SPDT PIN Switches
High Speed PIN Switches

Ferrite and Waveguide Products
Full Band Isolators and Modulators
Junction Circulators and Isolators
Fixed Attenuators, Level Set Attenuators and Variable Phase Shifters
Directional Couplers
Manual and Stepper Motor Driven Waveguide Switches
Matched Hybrid Tees
E-H Tuners, Hybrid Tees and Multipole Waveguide Bandpass Filters
Terminations, Tunable Loads and Tunable Shorts
E- and H-Plane Bends and Twists
Waveguide Sections, Transitions and Flange Adaptors

HUGHES

HUGHES AIRCRAFT COMPANY

ELECTRON DYNAMICS DIVISION

INDEX

ITEM	DATE
SOLID STATE MILLIMETER-WAVE PRODUCTS CATALOG (CONTINUED)	
Antenna Products	
Parabolic Dish Antenna with Monopulse Capability	
Antenna Accessories	
Gain Standard Horns	
Subsystems	
Subsystems	
Miscellaneous	
Waveguide Specifications and MIL Specification Cross Reference	
Product Functional Index	
Domestic Sales Offices and International Sales Offices	
Solid State Millimeter-Wave Products Domestic Price List	7/83
TAB – GaAs FET PRODUCTS	
GaAs FET Products Brochure	2/83
Models C2421H-1000 & C2422H-1000 10 GHz Matched GaAs Power FETS.	5/83
Models C2421H-1300 & C2422H-1300 13 GHz Matched GaAs Power FETS.	5/83
Models C2421H-1500 & C2422H-1500 15 GHz Matched GaAs Power FETS.	9/83
TAB – THERMAL PRODUCTS	
1350H.	3/74
Heat Pipes "Off the Shelf" 1370H series	2/82
1388H.	4/83
1395H.	2/77
Heat Pipes "Off the Shelf" 1370H series Domestic Price List	1/82
7000H Split-Stirling Cooler	9/83
7009H Integral-Stirling Cooler	4/83
7012H Integral-Stirling Cooler	11/83
7014H Split-Stirling Cooler	11/83
TAB – COMMUNICATIONS HPAs/TWTs	
High Power Amplifiers Brochure	6/83
662H	4/79
677H	8/81
881H	1/80
9020H04	5/82
9040H02	5/82
9040H03	9/82
9210H02	5/82
9225HA04	1/82
9240HA02	5/82
9300H.	7/83
9345HA04	6/82

CATALOG

HUGHES TWT AND TWTA HANDBOOK

HUGHES
HUGHES AIRCRAFT COMPANY
ELECTRON DYNAMICS DIVISION

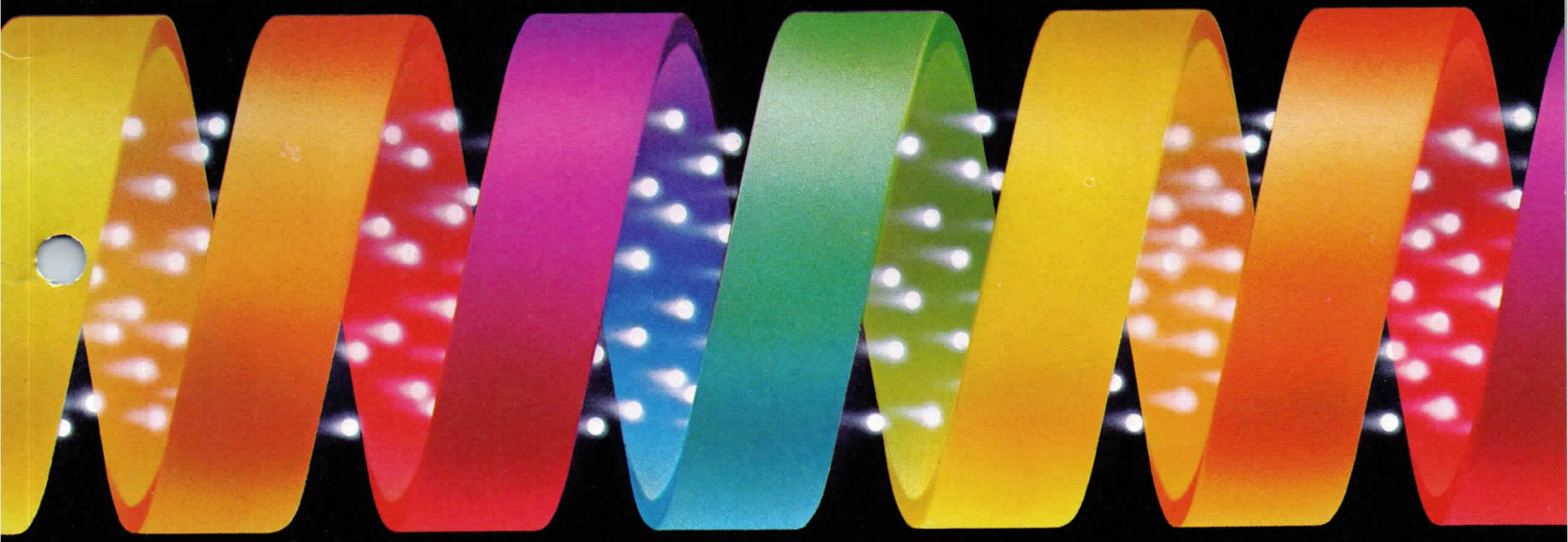

Table of Contents

Introduction to the TWT 1

Glossary of Terms 2

The Hughes/TWT Connection 6

How It Works 7

A Choice of Types 10

TWT Design—Inside and Out 14

How to Evaluate TWTs 20

Radar Applications 29

Electronic Countermeasures 30

The TWT in Space 35

Earth Terminal Communications 38

Instrumentation TWTAs 43

Looking Ahead 43

A Spectrum of TWTs and TWTAs 44

Introduction to the TWT

Traveling-wave tube

Electron tube used for the generation of microwave frequency radiation or for amplification at ultra-high frequencies, the operation of which depends on the interaction of a beam of electrons with an electromagnetic wave.

The history of microwave technology is a history of progressive advances in the techniques used to generate and amplify microwave frequencies. First came the triode, at the threshold of the microwave region, followed by the magnetron and other crossed-field devices. Then the klystron, and today the traveling-wave tube (TWT).

It would be difficult to imagine present-day microwave technology *without* the TWT and TWT amplifier (TWTA). No other devices can match the TWT's unique combination of bandwidth and gain. From electronic warfare to space exploration to the relaying of home-video signals, the TWT has expanded the microwave horizon. And the Hughes organization has been at the forefront of each of these TWT developments.

The purpose of this Handbook is to present an overview of today's TWT technology and the Hughes products which can be used to implement this technology. It is, in a sense, both a history and a prophecy. It will tell you where we are, and point the way toward new TWT innovations and applications — at Hughes and in your own development laboratory.

Glossary of Terms

AM/PM conversion
A term used with microwave tubes. Defined as the "amplitude modulation/phase modulation conversion," and is the change in phase angle of the output RF voltage produced by variations in input signal level, usually expressed in degrees/dB.

Anode
1. A positively charged electrode to which the main stream of electrons flow. 2. In a gridded vacuum tube, it is called a plate. 3. In a cathode-ray tube, the anodes are connected to a positive potential source. The anodes concentrate and accelerate the electron beam for focusing.

Average power
1. A value of power equal to the time integral of the instantaneous peak power divided by the time of the integration. 2. In circuits containing reactance and resistance, the current and voltage values may, at any instant, be of the same or different polarity. Depending on this condition the instantaneous power (E^XI) will have a positive or negative sign. The average power will be the net value taken over a cycle. This net power is due to the resistance present in the circuit.

Backstreaming
A condition in which a portion of the electron beam is reflected from the collector and travels "backward" toward the electron gun. This is an undesirable effect, distorting the primary electron beam and any modulation that may be present.

Backward wave oscillator
Abbreviated BWO. A wideband voltage tunable oscillator related to a traveling-wave tube in somewhat the same way that a klystron oscillator is related to a klystron amplifier. It uses a broadband circuit similar to a TWT. Internal feedback exists because the RF energy travels in a direction opposite to that of the electron stream.

Body/helix protection
Any combination of circuit elements from a simple resistive network to a complex "crow-bar" device, designed to prevent damage to the TWT slow-wave structure as the result of arcing or unusually high intercept current.

Cathode
A negatively charged electrode which emits electrons.

Cathode loading
The current density at the emitting surface of the cathode — usually expressed in amperes per square centimeter.

Collector
1. The output element of a vacuum tube that dissipates (or collects) the unconverted energy in the electron beam as thermal energy. It performs the same function as a plate in a standard vacuum tube. 2. In a transistor, the element which "collects" the current generated at the junction between the emitter and the base. The collector is the output element in a transistor and performs the same function similar to the plate in a vacuum tube.

Contra-wound helix
A slow-wave structure where two helices, wound in opposite directions, are superimposed into a single structure. This circuit offers substantially higher power than a conventional helix with some sacrifice of bandwidth.

Control grid
An electrode mounted between the cathode and the anode of a tube to control the flow of electrons. An appropriate negative voltage (with respect to the cathode) reduces the electron flow (beam current) to zero or cut-off and an appropriate positive voltage allows current to flow. This electrode is usually some sort of mesh structure.

Coupled-cavity tube
A TWT with a slow-wave structure made up of a number of "cavities" electrically coupled by means of coupling holes or slots. This circuit is capable of very high-power operation.

Crossed-field device
A high-vacuum electron tube in which a direct, alternating or pulsed voltage is applied to produce an electric field perpendicular both to a static magnetic field and to the direction of propagation of a radio-frequency delay line. The electron beam interacts synchronously with a slow wave on the delay line.

Current density
The number of electrons per unit area. Usually expressed as amperes per square centimeter.

Depressed collector
Applying a negative potential (with respect to the tube body or "ground") to the collector to slow the electron beam velocity in the region of the tube output coupler. This provides better synchronism near the output with the result that more power can be extracted from the beam, thus, improving the conversion efficiency of the device.

Dispenser cathode
A cathode that is not coated. A matrix-like structure which, when heated, continuously supplies emission material to the surface.

Dispersion
A term used to describe changes in phase velocity of an RF wave with respect to frequency.

Drift tube
A section of metal tubing, held at a fixed potential that forms a drift space where the electron beam is unaffected by external forces.

Drive
A term to indicate the RF input or RF signal to an electronic device.

Dual-mode
Any device having more than one set of operating parameters, i.e., a TWT operating in both a low-power CW mode and a high-power pulse mode.

Dynamic range for linear operation
The ratio of maximum input power producing 1 dB or less of gain compression to the reference noise level of the TWT.

Earth station
A surface-mounted transmitter or receiver designed to communicate to or via a satellite. Mobile earth stations can be vehicle mounted — land or sea.

ECCM (Electronic counter-counter-measures)
That sector of electronic warfare dealing with the neutralization of an unfriendly *jamming* device.

ECM (Electronic counter-measures)
That sector of electronic warfare dealing with the neutralization of an unfriendly *detection* device.

Efficiency
The ratio of RF power output to dc power input.

Electron
The smallest known negatively charged stable particle. It has a charge of 1.602×10^{-19} coulombs, and all electric charges are presumed to be integral multiples of this number. Electrons constitute the extra-nuclear structure of atoms, and hence are present in all matter. High speed electrons emitted during radioactive decay are called beta rays. Electrons released from a negatively charged electrode by the action of heat, light, ions or intense electrical fields constitute cathode rays.

Equalizers
A passive device providing selective loss over an operating band such that the net gain matches a required profile.

EPC (Electronic power conditioner)
A sophisticated power supply/modulator usually associated with space-qualified TWTAs.

ESM (Electronic support measures)
That division of EW involving actions to search for, intercept, locate and identify radiated electromagnetic energy for the purpose of threat recognition.

Focus electrode
An element which is part of the electron gun that is used to focus the electron beam.

Folded-waveguide circuit
See Coupled-Cavity.

Frequency designations
An "officially" (FCC, DOD, etc.) approved alphabetic designation for a range of frequencies. See Figure 1.

Gain
The ratio of output voltage, current or power to the input voltage, current or power respectively in an amplifier stage, receiver or system. Usually expressed in decibels.

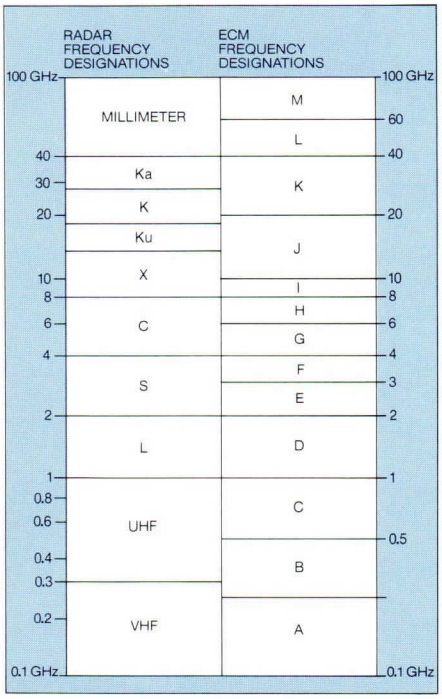

Figure 1 — *Traditional and new frequency designations*

Getter
A device which, when activated, absorbs gasses within an electron tube.

Grid
An electrode mounted between the cathode and the anode of a radio or electronic tube to control the flow of electrons from cathode to anode. The grid electrode may be either a cylindrical shaped ring or wire screen or a spiral of wire through which electrons can readily move.

Group delay
The distortion that results from the phase shift of a transmitted signal through a device is a nonlinear function of frequency. Areas of interest are linear delay, parabolic delay and the ripple component.

Linear delay is the difference in nanoseconds of delay between the ends of the specified bandwidth. Parabolic delay is the center frequency distance in nanoseconds between two defined frequency points within the specified bandwidth, divided by the square of the 1/2 bandwidth in MHz. Ripple is the maximum peak-to-peak variation in nanoseconds of the test data curve about the smoothed curve prepared.

Harmonic drive
The inclusion of phase-conditioned harmonic power in the input RF signal to reduce harmonic capture and improve efficiency at the low end of the operating band of a TWT.

Harmonic interaction
The effect of the harmonic content of the RF input signal on the beam modulation. This is generally undesirable and usually reduces the fundamental power output.

HPA (High Power Amplifier)
Usually refers to a subsystem used in Satellite Ground Terminal applications.

Intercepting grid
A control grid that is not mechanically shielded from the cathode and, thus, intercepts some electrons when a positive potential is applied.

Inter-digital line
A slow-wave structure composed of a comb-like structure with alternate segments being connected together at one end, remaining segments connected together at the opposite end.

Interfering mode
A higher order mode which, when excited, detracts from or distorts the signal in a transmission system.

Intermodulation distortion
1. Impairment of fidelity resulting from the production of frequencies that are the sum of, and the difference between, frequencies contained in the applied waveform. 2. When a signal containing two or more frequencies is applied to the input of a nonlinear device, the output consists of waves having the original frequencies plus additional new frequencies. These new frequencies are the result of intermodulation distortion in the nonlinear device. Undesirable in audio amplifiers and microwave tubes such as klystrons and traveling-wave tubes.

Isolation filters
A passive device or network which isolates a circuit or device from the effects of connected or surrounding circuits or devices.

Jammer

An active Electronic Counter-Measures (ECM) device designed to deny intelligence to unfriendly detectors.

Klystron

A microwave tube which operates on the principle of velocity modulation. Klystrons are designated as reflex klystron oscillator, two-cavity klystron oscillator and multi-cavity klystron amplifier. In each case electrons are bunched in a cavity gap to create oscillations or amplify microwave energy in the case of a multi-cavity klystron amplifier.

Loss buttons

In coupled-cavity TWT's, a patented method for inserting frequency selective loss in order to inhibit the excitation of higher order modes.

Magnetron

A microwave oscillator tube of special design containing a cathode and anode (or resonant cavities) in which a constant magnetic field modifies the space charge distribution and the current voltage relations. Under the action of the RF voltages across the resonators and the axial magnetic field, the electrons from the cathode form a bunched space charge cloud that rotates around the tube axis exciting the cavities and maintaining the RF voltages.

Metal-ceramic

A term applied to the vacuum tight seal, usually a braze joint, between a ceramic structure and a metal structure.

Mode interference

See "interfering mode."

Multi-mode

Having the capability of operating with more than a single set of parameters —see "Dual Mode."

Multi-octave

Capable of operating satisfactorily over a frequency range of 2 or more octaves.

Multipactor

A term to denote an electron-RF field interaction in which the electrons take energy from the RF fields and give up this energy to the surface on which the electrons are collected. Initially electrons are supplied by field emission but the number is increased by secondary emission.

In microwave tubes, multipactor is generally considered to be an undesirable effect and can occur across cavity or drift tube gaps, in output waveguides or involving the ceramic output window. It is detected by observing the output power as it is increased until multipactor occurs, at which point the RF power stays constant. On high power tubes, there will be heating of the surface involved.

Multi-stage collector

A collector with several segments, each segment being "depressed" more than the preceeding segment. This further enhances the collection efficiency thus the overall efficiency of the device.

Noise figure

1. Indicates the ratio of signal-to-noise on the input of a device to signal-to-noise on the output. It is important because it indicates the amount of noise the amplifier contributes to the signal and it is an absolute indicator of the sensitivity of the device. It is usually expressed in dB, and is abbreviated NF. 2. The noise figure of a network is defined as the ratio of the total noise power available at the output port when the input termination is at 290° K to that portion of the total available output noise power engendered by the input termination and delivered to the output via the primary signal channel.

Noise power

1. The noise generated by a device or tube, measurable at the output port, with the input terminated and without a driven signal. Ideally, the output power should be measured using a bandpass filter in order to define the bandwidth properly. Usually symbolized by $N.P_O$ and measured in milliwatts or dBm. 2. A term given to a calculated noise figure and symbolized a NF. This measurement is only an approximate method since it is restricted to several limitations. However, it serves as a useful method in obtaining noise figures when elaborate noise measurement equipment is not available. It is defined as $NF = 114 + NP_O - G - BW$, where NP_O is the measured noise power out of the device, G is the gain in dB and BW is the bandwidth in dB (referred to 1 MHz).

Non-intercepting grid

A control grid that is mechanically shielded from the cathode by a "shadow grid" in such a way that no electrons are intercepted when a positive (with respect to cathode) voltage is applied, to the control grid.

Outgassing

A term used to describe the emission of various gasses from heated metal surfaces during the processing and testing of thermionic devices.

Overdrive

An input signal level greater than that required for saturation, resulting in decreasing output power.

Peak power

1. The power at the maximum of a pulse of power, excluding spikes. 2. The output power, averaged over a carrier cycle, at the maximum amplitude that can occur with any combination of signals to be transmitted.

Perveance

1. A numerical constant representative of the cathode to anode spacing inside a vacuum tube. 2. A quantity which represents saturation current which can flow in a vacuum tube of given geometry. For any shape, the saturation current is proportional to the three-halves power of the applied potential. The perveance is the constant of proportionality. It is symbolized as K and is expressed as

$$K = \frac{I}{E\sqrt{E}} \text{ or } I = K(E)^{3/2}$$

Phase linearity

A term referring to the degree of deviation from a straight line of the phase-versus-frequency characteristic of a device.

Phase tracking

The closeness or similarity of the phase characteristic of a number of devices. This is an important consideration when power combining two or more devices.

Phase velocity

Indicates the transit time of a given signal as it travels along the axis of the RF circuit in relation to the electron beam. It is the product of frequency and wavelength. May not be equal to the free space velocity of radiation.

Power curve

A plot of output power versus frequency.

PPM (Periodic Permanent Magnet)
A term describing a method of focusing a TWT where permanent magnets of opposite polarity are placed side by side along the length of the tube.

Pulse compression
A matched filter technique used to discriminate against signals which do not correspond to the transmitted signal. Used in radar systems for improved detection capability.

Pulse-up ratio
The ratio, usually expressed in dB, between the CW power level and the pulse-power level in a Dual-Mode device.

Radar
Acronym for radio detecting and ranging. A system where a relatively high-frequency radio pulse is used to bounce a signal off a distant object. The direction and time of response give the location of the object.

Redundancy, automatic
In a communications system, a feature which automatically switches to a standby unit in the event of a failure.

Resonant cavity
A short piece of waveguide of adjustable length, and terminated at either or both ends with a metal piston, an iris diaphram, or some other wave-reflecting device. It can be used as a filter, a coupler between guides of different diameters and as an impedance network corresponding to those used in radio circuits, or microwave tubes such as klystrons.

Ring-bar tube
A TWT with a slow-wave structure composed of ring-like segments connected by straps or "bars." This device is capable of higher power levels than a conventional helix tube at a significant reduction in bandwidth.

Saturated power output
A term used to describe that point on the power output versus power input characteristic where an increase in input power does *not* produce an increase in output power.

Screen grid
A grid structure placed between the control grid and anode to shield the control grid from electrostatic lines from the anode. In a multi-mode electron gun the element used to control beam current from the edge of the cathode.

Serrodyne
A term describing the linear translation of the phase of a signal on the helix of a TWT by a linear sawtooth waveform being applied to the helix. It is important because it indicates a property of a helix that enables it to operate as a single sideband frequency translator.

Shadow grid
A grid structure placed between the cathode and control grid and electrically connected to the cathode. This element shields the control grid from interception.

Single-stage collector
A term referring to a conventional collector — may be simply grounded or depressed (see "depressed collector").

Slow-wave circuit
Any structure which "slows" the effective axial velocity of an RF wave in order to maintain synchronism between that wave and an electron beam.

Slow-wave structure
A microwave propagating structure called a helix in one type of a traveling-wave tube. See Slow Wave Circuit.

Spherical diode
A two element (cathode and anode) structure built in such a manner as to duplicate the spherical geometry of the cathode in a typical electron gun. Used for evaluation and analysis of electron and analysis of electron gun designs and for realistic cathode life testing.

Tapered termination
A gradual increase in the amount of loss applied to a slow-wave structure to control reflections within a TWT.

Tapered velocity
A change in the pitch of a helix or height of a cavity to effectively change the velocity of the RF wave. This is done to maintain synchronism between the RF wave and the electron beam.

Tetrode
A Thermionic device having four elements usually a cathode, control grid, screen grid, and anode. In multi-mode TWT's, a term describing the electron gun (cathode, shadow grid, control grid and screen grid).

Time-in circuitry
A combination of circuit elements designed to actuate after the lapse of a certain period of time. Commonly used to apply high voltage to a tube following an appropriate warm-up time after application of heater voltage.

Transfer curve
1. The family of curves for various values of plate voltage in which plate current is plotted as a function of control grid voltage. 2. Specifically with regard to microwave tubes, a curve or family of curves in which input drive power is plotted as a function of output power in an amplifier or system at a fixed beam voltage. Sometimes referred to as a gain-curve.

Triode
A three element thermionic device composed of a cathode, a control grid and an anode.

TR limiter
A Transmit/Receive switching device which limits the amount of power transmitted. Usually employed as a Receiver protect device in a Radar system.

TWT (Traveling-wave tube)
A microwave tube of special design using a broadband circuit in which a beam of electrons interact continuously with a guided electromagnetic field to amplify microwave frequencies.

TWTA (Traveling-wave-tube-amplifier)
A combination of power supply, modulator, and traveling-wave tube usually packaged in a common enclosure.

Uplink/downlink
Uplink refers to the transmission of intelligence to a satellite while downlink refers to the re-transmission to a ground station.

Vacuum envelope
Any structure containing or capable of containing a high vacuum environment. Usually refers to the "body" structure of a thermionic tube.

Velocity resynchronization
Any method for changing the axial velocity of an RF wave to improve the synchronism between that wave and an electron beam.

The Hughes/TWT Connection

The TWT is not a new device. Its remarkable capabilities, and some of its potential applications, have been known for more than thirty years. It was invented during the latter part of World War II by an Austrian refugee, Dr. Rudolf Kompfner, while working on microwave tubes for the British Admiralty.

The TWT was not utilized during that war and remained an experimental laboratory device until the first practical tube was developed by J. R. Pierce and L. M. Field at the Bell Telephone Laboratories (BTL) in 1945. The first details were published in the IRE Transactions for February, 1947.

From 1945 to 1950, most of the development work was done at BTL and Stanford University. By present-day standards, these efforts were relatively low key. BTL, in particular, was interested in the TWT because of its potential application in the communication field.

Meanwhile, the military services had other potential applications in mind — radar and electronic countermeasures. The development of radars during World War II had been rapidly followed by the development of countermeasure techniques to deceive and jam them. The evolution of new radars has, therefore, been partially the result of a continuous need to stay ahead of any new countermeasure tactics which might compromise the radar's effectiveness (and vice versa). The trend in search radar, for example, has been toward much higher powers and toward new techniques which would have the effect of increasing visibility even while being jammed. A good anti-jamming radar must be able to shift frequency over a wide bandwidth quickly to avoid dwelling at the jammer's source frequency.

Similarly, the trend in ECM has been toward wide bandwidth system capabilities where the jammer amplifies wideband noise, or may deceptively retransmit the hostile radar pulse to offset the radar's ability to determine the target's position or track.

Since wide-frequency bandwidths are essential to the employment of all these tactics, an amplifying device capable of broad operating ranges with sufficient gain, output power and efficiency was needed. The TWT was found to be ideally suited for the task, and the military deserves credit for funding many of the early advances in TWT development.

Much of this advance-technology work was done at Hughes. In the late 1950's, with the future of the TWT as a key element in a number of application areas assured, a small group of scientists, engineers and skilled technical support people who had been involved in TWT research throughout Hughes were brought into one organization. The organization later became the Electron Dynamics Division, which now has an established reputation as a leader in the development and production of military and commercial TWTs, TWTAs and related subsystems.

Some of the earliest successes for Hughes TWTs were in the area of space applications. Hughes space TWTs and TWTAs have been used in scientific experiments, manned missions, and communication applications by both military and commercial customers. Early programs included Syncom, the ATS series, the Intelsat series and, more recently, domestic communication satellites both here and abroad. To meet the requirements for future space programs, such as DSCS-III, Intelsat V, Space Shuttle, TDRSS, and the domestic communication satellites, these devices continue to be developed and refined. This work is advancing the state-of-the-art in areas of longer life, lighter weight, higher efficiencies and frequencies, and smaller size.

Hughes TWTs are also meeting the expanding customer requirements in other application areas, such as radar, electronic countermeasures, ground terminals and microwave instrumentation. In all of these fields, on-going programs for further product refinement and basic research continue to produce devices and subsystems of the most advanced designs.

How It Works

The basic form of the TWT has changed very little since its invention by R. Kompfner in 1944, although the performance of these devices today is orders of magnitude better in all attributes.

Amplification in a TWT is attained by causing an electromagnetic RF wave to travel along a propagating structure in close proximity to an electron beam, as indicated in Figure 2.

At the left of this simplified diagram is an electron gun assembly. The gun cathode, when heated, emits a continuous stream of electrons. These electrons are drawn through the anode and are then focused into a tight, narrow tubular beam by a magnetic field and thereby made to travel inside the helix for the length of the tube, and eventually are dissipated in the form of heat in the "collector."

At the same time that the cylindrical electron beam is moving along the length of the tube axis, the desired RF signal is fed onto a "slow-wave" structure consisting, in this case, of a tightly wound wire called a helix. The RF energy travels along the helix wire at the velocity of light. However, because of the helical path, the energy progresses along the axial length of the tube at a considerably lower axial velocity, determined primarily by the pitch and diameter of the helix.

The phase velocity of the RF wave, or the speed at which the energy is moving along the length of the tube, is made slightly slower than the velocity of the electron beam. The near-synchronism results in a continuous interaction between the electron beam and the RF signal. Some of the electrons in the beam are slowed by the RF field, while others are accelerated.

As the "velocity-modulated" electrons move down through the helix they form bunches. These bunches, in turn, overtake and interact with the slower helix RF wave, surrendering dc energy to it. The result is an exponential amplification of the RF signal by the time it reaches the output coupler. Single TWTs have been built with power gains of more than 10,000,000 (70 dB).

Controlling the beam

The electron gun functions like the lens in a projector. The objective is to get as much electron current flowing within as concentrated a beam as possible without distortion. Good gun design is extremely important since it is the source of electrons for the beam. A wide variety of gun designs have been developed by Hughes in an effort to provide better electron beams that can be readily adapted to new TWT types.

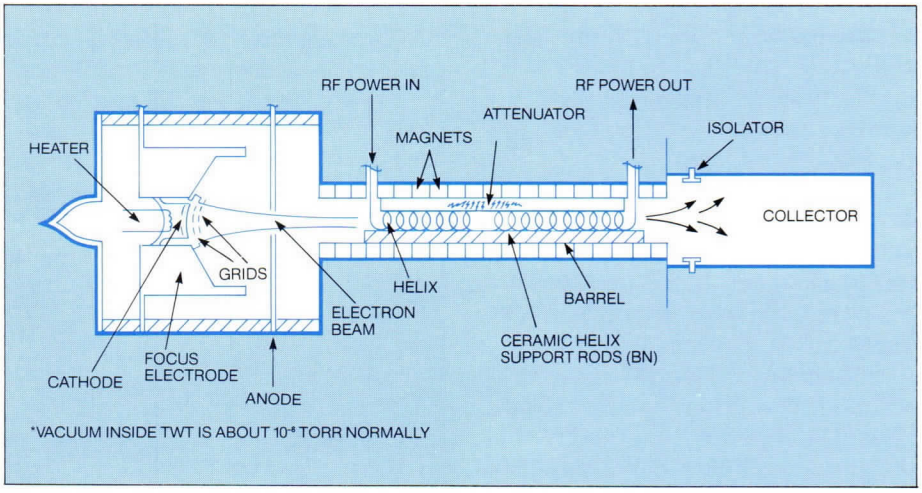

Figure 2 — *Simplified TWT schematic.*

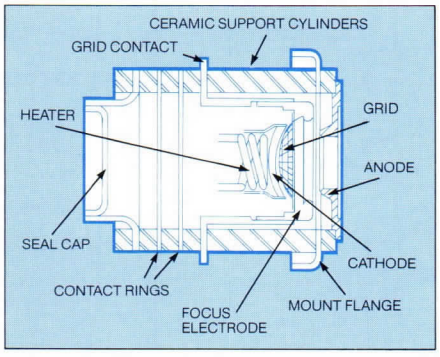

Figure 3 — *A typical grid-controlled electron gun includes a support structure, heater, cathode grid, focus electrode and anode.*

Most TWT guns also include control grids to make it possible to turn the electron beam on and off rapidly with a much smaller voltage swing than is required when the cathode voltage is modulated.

The typical grid-controlled gun has six main elements — the gun shell or support structure, which is usually ceramic; the heater; the cathode or electron emitter; a control grid; a focus electrode to aid in proper formation of the electron beam; and an anode which effectively provides the accelerating field for the electrons. Figure 3 shows a typical gun in cross-section.

Life and reliability of the end product are largely dependent upon the design and type of cathode material used. Many different types of cathode materials have been used as electron emitters, but two have generally become standard. The first is an oxide type with a nickel base and a barium/strontium coating. The second is a dispenser type which typically has an emitting surface consisting of porous tungsten through which barium is dispensed from a base material impregnated with a mixture of barium-calcium aluminates. A variation of this type of cathode, known as M-type cathode, is coated with a porous layer of osmium to lower the work function and allow a lower operating temperature.

A second type of dispenser cathode is the coated particle cathode (CPC) which, as the name suggests, is a structure made up of specially coated particles bonded to a nickel support.

The choice of a specific cathode material is dependent upon the required beam power (current density) and is a function of individual tube design.

Variations on the helix

Although there are many types of helix structures, most are based upon Kompfner's original helix design — still the widest bandwidth structure available.

Figure 4 illustrates the principal component parts of a typical metal-ceramic helix TWT. In the illustration, the metal-ceramic envelope and PPM focusing structure can be seen in the central portion of the photograph. The final assembly, incorporating the balance of the package parts, can be seen in Figure 5.

Figure 6 demonstrates the kind of performance characteristics that can be achieved with this type of slow-wave circuit. The extremely broadband performance is ensured by the highly accurate tolerances held during the helix-winding process. This accuracy is essential to the process of interaction between the electron beam and the superimposed RF wave.

For example, in a 1,500 volt electron beam, the electrons travel at 1/13th the speed of light. Since the RF signal is carried by the helix at about the speed of light, the resulting linear ratio of the helix to the beam must approximate 13:1.

In its basic form, the helix is generally restricted to devices having power outputs of less than 3,000 watts. A number of configurations derived from the basic helix structure have been explored at Hughes, therefore, in an attempt to extend its properties to provide even higher output powers. Early among these was a scheme of using two helices wound in opposite directions. This device, known as a contra-wound helix, extends the useful range of operating voltages up to the 20 to 70 kV range and allows larger transverse dimensions at a given frequency range.

The reason the peak-power capability of helix tubes is usually restricted to about 3 kW output power is that their circuit characteristics are susceptible to "backward-wave" oscillations when the operating voltage exceeds 10 kV.

One solution to this problem is the ring-bar tube, which has distinctly different circuit properties and is not subject to backward-wave oscillations. Ring-bar TWTs are generally designed for voltages in the 12 kV to 30 kV range, with peak-power levels in order of 10 kW to 20 kW. With sufficiently high voltages, peak-power output levels can be in excess of 100 kW.

Another significant TWT development in recent years has been the utilization of basic waveguide mode resonators, coupled together by means of capacitive or inductive apertures to provide either a fundamental forward- or backward-wave circuit. The circuit, developed by Hughes, is known as the coupled-cavity circuit. It is also described as a folded-waveguide circuit since its structure resembles a waveguide folded up in accordian-like fashion.

The coupled-cavity structure effectively slows the RF energy to allow its synchronization with the electron beam — just as in the case of the helix.

The original coupled-cavity structures provided frequency bandwidths on the order of 10 to 15%. Recently, however, methods have been developed for increasing the bandwidth to 40% and more. Tubes utilizing this circuit have been built to produce several hundred kilowatts of peak power at S- through Ku-bands with up to 60 dB gain.

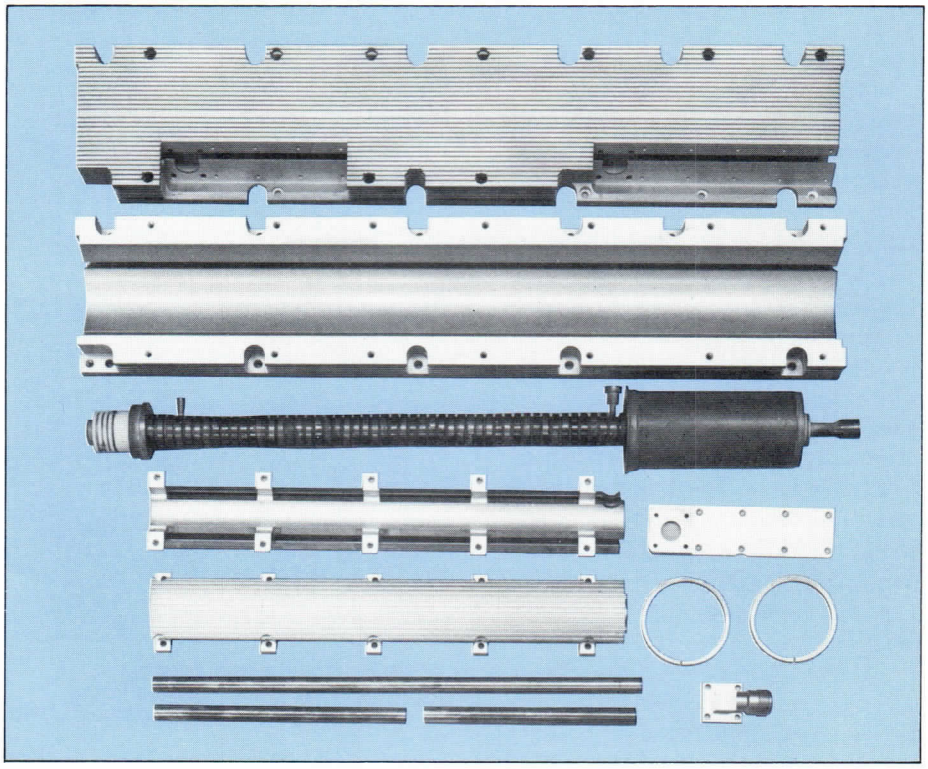

Figure 4 — *658H Traveling-wave tube with major package parts.*

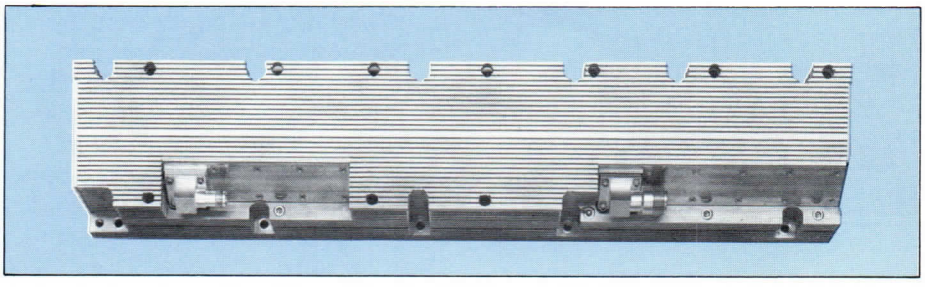

Figure 5 — *Assembled helix TWT*

The inter-digital line is also a version of the coupled-cavity circuit and has found extensive use in low and medium power amplifiers ranging up to one kW peak-power output with gains of about 30 dB.

All of these variations on the helix TWT are described in detail in Section 5.

Comparison with the klystron

At the input of the TWT circuit, the RF signal level is quite low and the resulting modulation of the electron beam is similar to that of the input cavity of a klystron. In the case of the TWT, however, the circuit is nonresonant and the wave actually propagates with the same speed as the electrons in the beam.

The initial effect on the beam is that a small amount of velocity modulation later translates to current modulation, which then induces an RF current in the circuit causing amplification — assuming the proper phase relationships are maintained.

The major difference between this mechanism and that of a klystron is that the TWT interaction is continuous over the entire length of the circuit rather than occurring at the gaps of a few resonant cavities. This continuous interaction is the result of a propagating wave, whereas in the klystron the wave does not propagate. In fact, in the klystron there is generally no coupling between any of the cavities except that afforded by the modulation of the electron stream.

The question can be asked, however, whether any real difference exists between a very narrowband TWT and a broadband klystron — both of which can indeed possess the same bandwidth performance. The answer is that in a true klystron, the wave does *not* propagate. Each cavity operates independently and in complete isolation from all other cavities. There are exceptions to this rule in the form of hybrid configurations in which the pure klystron concept is significantly modified. But these cases do not alter the basic distinctions between the two devices.

Obviously, then, the single most powerful attribute of the TWT is bandwidth. Although there are applications for TWTs where the bandwidth requirement is very small, by and large the primary impetus for their continued development has been applications where the bandwidth is 10 percent or more of the center frequency.

Another advantage intrinsic in the TWT amplification process is that extremely large gains in the neighborhood of 60 dB can be realized with little sacrifice in bandwidth or any of the other desirable properties of the TWT design.

Because the gain-bandwidth product is not the result of an unpleasant tradeoff, as is often the case in other microwave amplifiers, there is no reason to be limited by any such figure of merit. Instead, the gain of a TWT is an exponential function of the interaction length. Each incremental increase in length produces the same incremental increase in gain. This means that measured in decibels, the gain is directly proportional to length, which gives the TWT a distinct advantage over crossed-field amplifiers, for which the gain dependence on length is much less favorable.

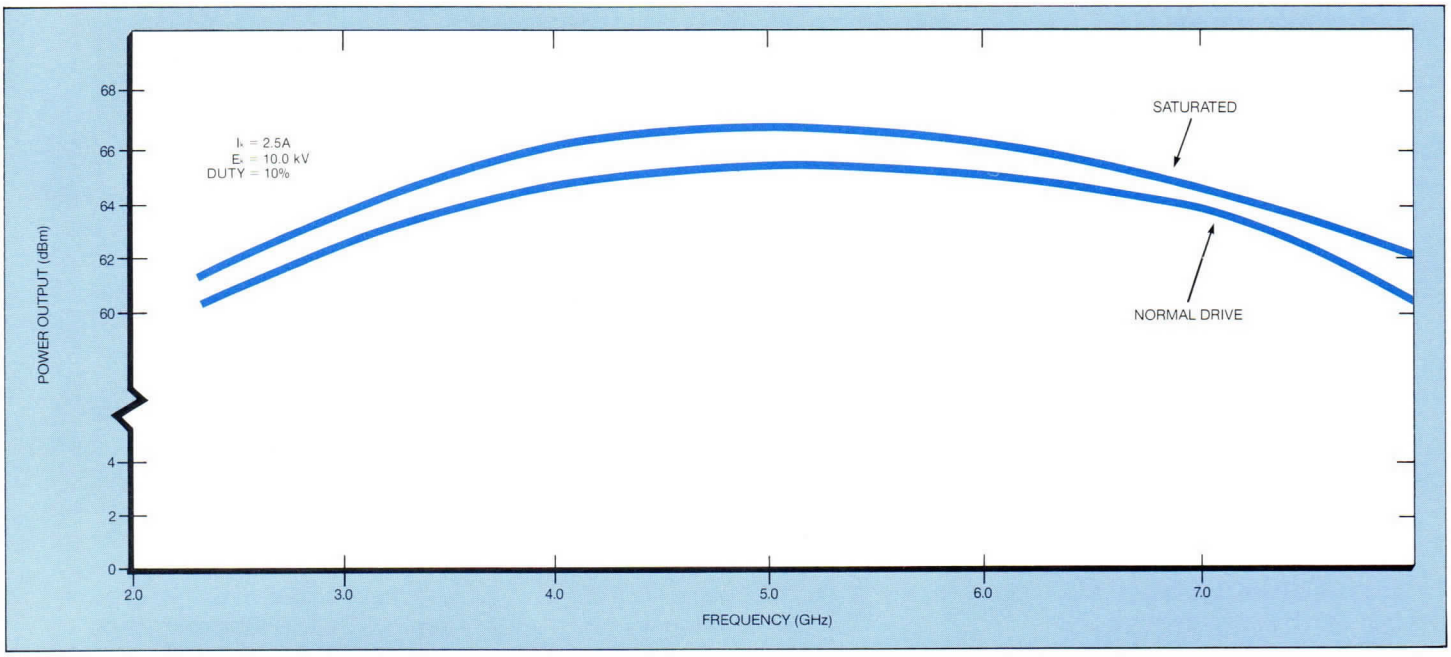

Figure 6 — *Output Power, 658H*

A Choice of Types

Historically, the first circuit to be investigated by R. Kompfner in 1944 was the simple helix, which proved to be the mainstay of the TWT industry 25 years later.

Obviously this circuit must possess some outstanding advantages to have persisted so long in such a commanding position. Probably its simplicity appealed to Kompfner and led him to utilize it in his broadband modulation experiments, since at that time the available techniques for fabrication and assembly of vacuum components were crude and primitive compared to those of the present art.

The early investigators of this elegant circuit probably did not fully realize that almost all of the theoretical measurement standards would show that the helix was far superior to hundreds of other propagating structures which were to be investigated during the formative years of TWT development. In retrospect it is easy to appreciate the basic physical reasons which have given the helix its unchallenged position of leadership, but in the beginning, many hoped that the very first circuit candidate could be superseded by something much better.

Simple first-order considerations of the interaction process between an electron stream and a propagating electromagnetic wave suggest that the following properties determine a figure of merit for the particular circuit being evaluated:

- Minimum stored energy in the propagating wave
- Maximum axial electric field in the region of the electron beam
- Constant phase velocity (no dispersion)
- No interfering modes

The last property is one which must be qualified since it is highly dependent upon the specific design under consideration, but in general the helix possesses a very manageable mode structure that is indeed superior to almost all other substitutes.

The dispersion characteristic of the helix is probably the single most significant property that has caused this circuit to find such acceptance for broadband application. ECM systems and broadband test equipment demand an octave or more of good performance from a TWT to provide maximum coverage in a single amplifier.

Widest bandwidth

No circuit has ever rivaled the helix in bandwidth capability, and most do not come close in this department. It behaves very much like a single wire above a ground plane, propagating a TEM mode. Such a circuit is, of course, completely nondispersive. Since the helix is much more complicated than a single wire over a ground plane, it does not provide infinite bandwidth and does exhibit mode interference—at a very well-defined point where the circumference is exactly one-half the wavelength of the propagating frequency.

Since the helix geometry does not involve large opposed metallic surfaces, the stored energy for a given power level is naturally quite low. Almost any conceivable alternative to the helix employs more massive metal surfaces, which provide an equivalent capacitance for the storage of energy and a lowering of this figure of merit.

The helix also provides a very convenient electric-field configuration. Inside the structure the field is somewhat constant (it does vary) over the cross section of the pencil beam which is generally utilized as the energy source. It is difficult to imagine another geometry with the same natural uniformity in this regard. Most alternative circuits do not provide, therefore, as strong an interaction between the electric field and the beam.

Analytically, this parameter is referred to as the circuit impedance even though it relates to the electric field which is available for interaction with the electron beam and is, therefore, not the same impedance as is generally employed in ordinary microwave circuit investigations.

Mechanical advantages

Aside from purely electrical considerations, the helix is almost ideal from a mechanical viewpoint. It lends itself to simple fabrication techniques which are highly precise. And it can be accurately assembled in structures which fit well with the rest of the TWT package. Circuit symmetry is essential if an elegant design is desired at a reasonably low cost.

The first helix TWTs constructed in the late 1940's were characterized by their fragility and very low thermal capacity. As a consequence, their early development was directed primarily towards low-power applications where the signal power was a few watts or less. These devices were tempermental and short-lived because of the poor techniques of design and construction.

Today, by contrast, helix-type TWTs are quite capable of delivering several kilowatts of CW power at S-band and C-band over an octave of frequency coverage. The lifetime and reliability of many examples exceed most other types of active microwave sources. In short, this generic device has advanced in capability by orders of magnitude as a result of 25 years of sustained high-level development efforts by the major TWT manufacturers.

Helix-derived TWTs

To create suitable high-power beams for the generation of more than 5 kW of peak RF power, it is almost mandatory to utilize beam voltages in excess of 10 kV—assuming a conventional TWT design approach is to be employed.

Above 10-kV beam velocities, however, the pure helix is a poor circuit for traveling-wave interaction because of its electric-field characteristics. Historically, therefore, investigators have proceeded in two separate directions, both of which have proved successful in their efforts to develop suitable TWT circuits for use above 10 kV.

The first attempts concentrated on a modification of the simple helix circuit by employing another helix coincident with the first, but wound with a reversed pitch. This came to be known as the contra-wound helix, and later versions were designated as the ring-bar circuit. Figure 7 illustrates these geometries.

It can be shown from simple circuit considerations that the phase velocity of these two configurations is going to be much higher than a simple helix, and consequently synchronous beam voltages far in excess of 10 kV should be realizable.

This is, in fact, the case. And many successful TWTs have been developed using this structure in the peak-power range of 5-200 kW at frequencies through Ku-band and higher.

The basic assembly is almost identical to that of a conventional helix tube in that the RF structure is supported on ceramic rods inside a long tubular barrel. Unfortunately, the thermal capacity of such a circuit is not much different from that of the simple helix, so the ultimate average power capability is restricted to roughly the same numbers for a given frequency and a given size.

Ring-bar TWTs

Ring-bar TWTs can conceptually be considered as structures derived from multiple helix circuits — in particular, the twin crosswound helix.

The ring-bar circuit has, however, significantly higher interaction impedance than a helix, and is thus capable of more efficient beam power conversion and larger gain per wavelength.

Such tubes also exhibit superior RF-stability with respect to backward-wave oscillations (BWO), compared to helix tubes, and are therefore capable of operating at higher voltages, as well as of producing higher peak-power levels. They are also capable of handling larger average RF power loads, and thus they frequently use nonintercepting gridded guns rather than intercepting (single) gridded guns characteristic of high-power helix tubes.

Unlike most helix tubes, the bandwidth of a ring-bar tube is generally limited to about 10% to 20%. As a result, the ring-bar design finds its most frequent application in radar systems. Typical is the Hughes 8729H prototype ring-bar TWT, with performance characteristics summarized in Figures 8 and 9.

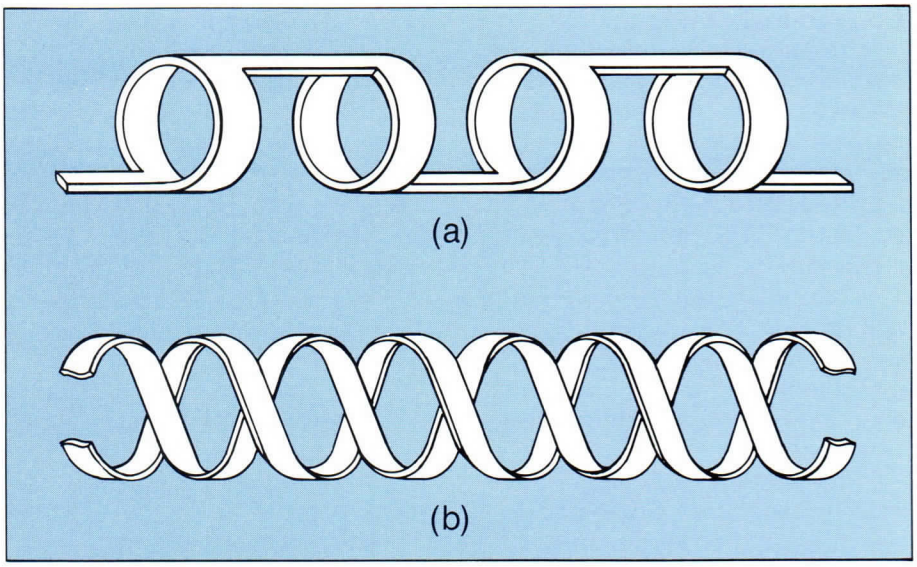

Figure 7 — *(a) Ring-and-bar type contra-wound helix. (b) Two-tape contra-wound helix.*

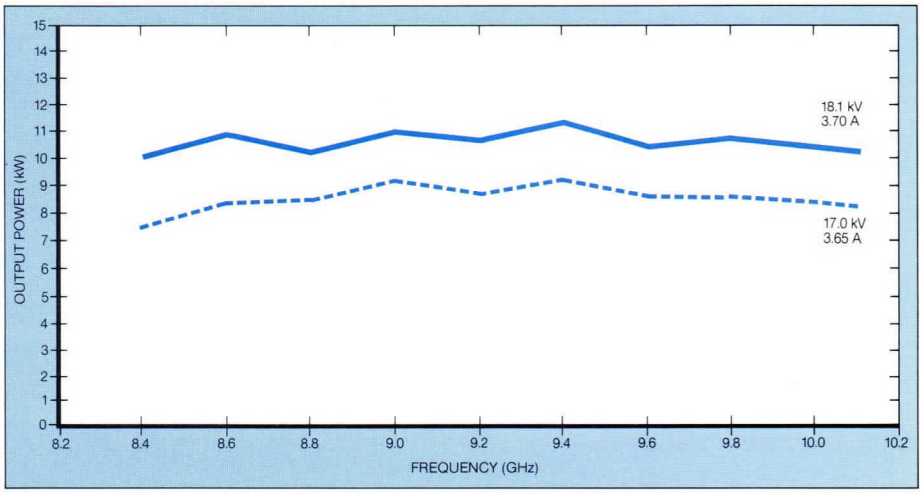

Figure 8 — *Peak output power of ring-bar tube 8729H.*

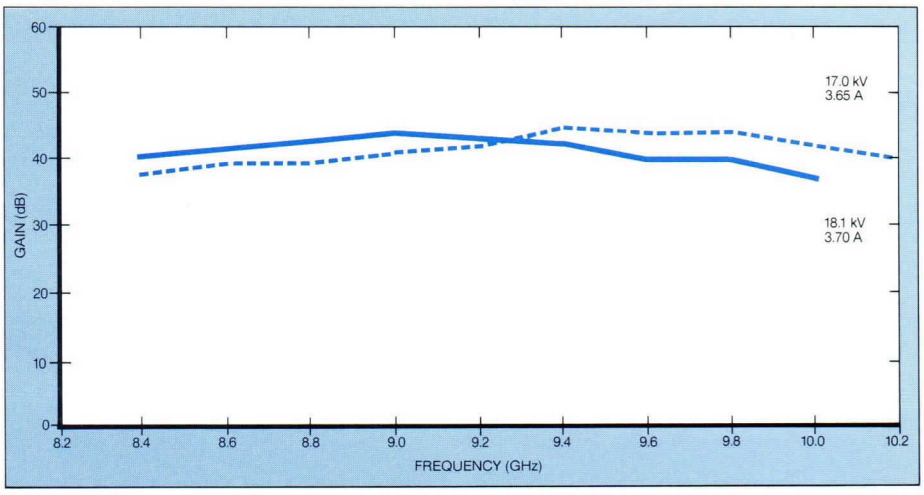

Figure 9 — *Saturated gain for ring-bar tube 8729H.*

Coupled-cavity TWTs

The second basic approach to high-power circuits—other than variations on the helix—has been far more popular because of its many distinct advantages and tremendous flexibility. It represents a complete departure from the helix concept both in its electrical behavior and mechanical configurations.

The best generic description is a high-power filter circuit with bandpass characteristics, a form of traveling-wave circuitry which was first considered at the very beginnings of the technology in the 1940's.

Any repetitive series of lumped LC elements constitutes a propagating filter-type circuit, and the techniques for synthesizing these circuits are well established in the art. Almost any phase characteristic desired can be realized if the proper LC elements are selected. The real test comes when one tries to transform these choices into a practical mechanical structure that can be fabricated and assembled in accordance with accepted vacuum-tube techniques.

The early attempts at this task resulted in some very interesting museum pieces, which probably consumed thousands of man-hours of fruitless labor. These were rejected because they lacked simplicity and symmetry, which would have made them practical from the viewpoint of cost and flexibility. Probably as a result of these frustrating endeavors, the real objectives were properly identified and the main thrust proceeded in a direction which satisfied the basic requirements of a good universal filter-type circuit.

All of this early work culminated in the discovery and development of the coupled-cavity circuit, which now constitutes the fundamental building block of an extremely important class of high-power TWTs. Its remarkable acceptance is clear testimony to its inherent superior qualities, which can be summarized as follows:

- Excellent electrical characteristics in terms of impedance, bandwidth, and mode structure
- Mechanical simplicity, circular symmetry for easy machining and assembly
- Form factor ideally suited to PPM focusing
- Rugged from both a mechanical and thermal viewpoint
- Very versatile; simple procedures for scaling frequency, power, and bandwidth

The versatility of the coupled-cavity circuit is demonstrated by the fact that it is widely used from L-band to millimeter waves and for power levels from 1 to 500 kW. Probably 90% of all high-power TWTs employ this basic type of filter structure.

Coupling through the slots

The term "coupled cavity" stems from the striking similarity of the individual unit cells to an ordinary klystron resonant cavity. In the latter case, of course, there is no coupling, so each cavity is completely closed. In the case of the TWT circuit, coupling is provided by a long slot in the wall of each cavity, as illustrated in Figure 10.

This slot strongly couples the magnetic component of the field in adjacent cavities in such a manner that the passband of the circuit is primarily a function of this one variable. For very small slots, or coupling holes, the passband is quite narrow. When the slot angle (Ø) is somewhat larger than 180° the passband is close to its practical limits.

The drift tube is formed by the re-entrant part of the cavity, just as is the case with a klystron. Its length is determined by beam-interaction considerations, but the optimum design for a given bandwidth is not a critical function of the gap length. In fact, all of the important cavity dimensions can be adjusted over a rather broad range to accommodate tradeoffs between thermal requirements and electrical performance without seriously degrading circuit capability.

Once the design is made, however, the tolerances of the circuit dimensions must be very closely maintained. Each half-cavity section can be fabricated in laminated form, which is ideal for the assembly and brazing operations. The individual parts are almost self-jigging, which assures very accurate alignment and spacing between cavities.

Liquid cooling of the circuit can be provided by properly channeling the outer diameter such that the coolant flows around the massive copper walls of the individual sections. In extreme cases, the coolant can be channeled around the drift tubes to absorb beam interception heating directly, at the price of greater fabrication complexity.

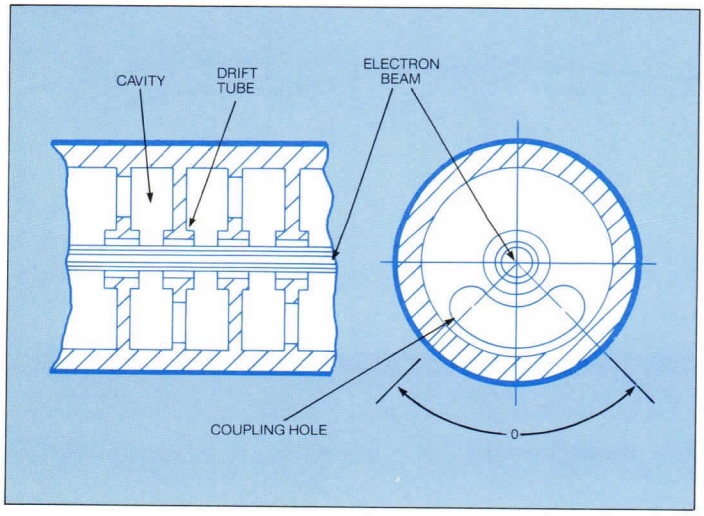

Figure 10 — *Basic coupled-cavity circuit.*

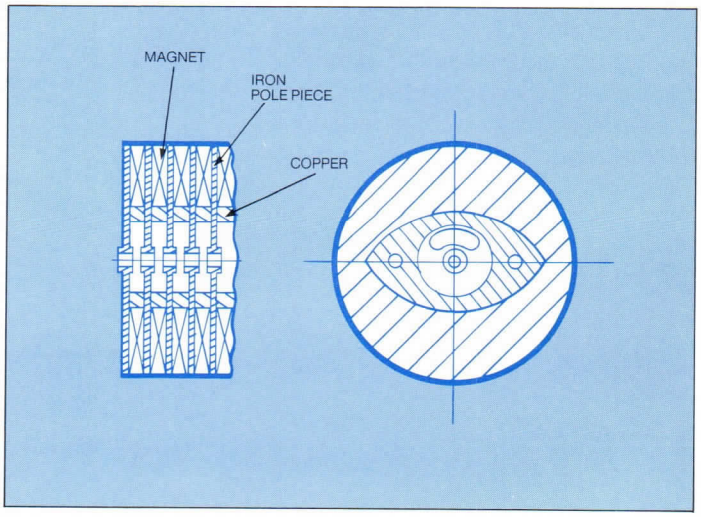

Figure 11 — *Coupled-cavity circuit with integral periodic-permanent-magnet (PPM) focusing.*

Lightweight focusing

Perhaps the most outstanding advantage of the coupled-cavity circuit from the user's viewpoint is its natural adaptability to lightweight PPM focusing. In many airborne systems, the weight and bulk of a separate focusing solenoid, along with its sizable power supply, are unacceptable. In these situations a TWT would be rejected if it were not possible to simplify the focusing requirements with a PPM structure.

Figure 11 illustrates the manner in which the PPM focusing system and the RF circuit are combined together to bring the magnetic field down to the beam periphery. The individual cavity walls are fabricated from high purity iron, subsequently plated with copper to reduce RF losses. The iron channels the magnetic field in a very efficient way to the beam region where its effectiveness is maximized.

If such a geometry were not available for this purpose, it is highly unlikely that the typical high-powered TWT could even be focused with available permanent magnet materials. Generally these beams are very dense and require powerful magnetic forces to hold them together.

On the outside of the vacuum envelope the iron pieces (extensions of the cavity walls) are made large enough to contain most of the magnetic material utilized in the focusing cells. Such a configuration improves the accuracy of alignment of the magnetic field and also gives good mechanical support to the entire assembly.

From Figure 11 it is apparent that some degree of circular symmetry is lost in the PPM geometry due to the presence of the cooling channels. With the iron pole pieces, it is generally desirable to provide liquid-cooling lines close to the cavity walls to minimize the temperature drop from the internal sections of the tube to the outside environment.

It should be emphasized that iron is not a good thermal conductor when compared to copper, and, furthermore, the presence of the permanent magnets creates some difficulty in accommodating simple cooling schemes. For low-to-moderate average-power applications these considerations are not important, and less complex geometries are then possible.

Millimeter-wave tubes

The work which has been done in the development of high-power millimeter-wave tubes has been largely influenced by the needs of actual systems operating in this frequency band. Significant results of the work done in this band are summarized by Figures 12 and 13, which define both the CW and the pulsed-power levels that have been achieved.

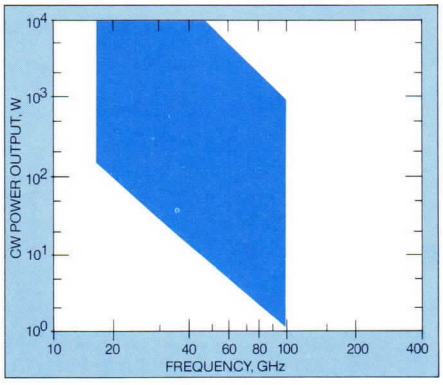

Figure 12 — *The status of CW millimeter-wave tubes.*

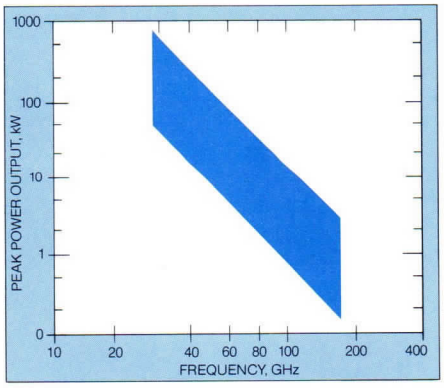

Figure 13 — *The status of pulsed millimeter-wave tubes.*

The lower edge of the shaded portions of these diagrams indicate the state of the art as it existed in 1960, and the upper edge indicates the current state-of-the-art. However, these curves are not meant to imply that the technology does not exist today to construct tubes which fall outside the shaded regions, but only that there have been no pressing system applications that have demanded it.

In general, millimeter-wave tubes utilize very low perveance electron guns, which create some unusual electron-beam focusing problems assocated with the proper containment of the "thermal" electrons. Hence millimeter-wave tubes have frequently been equipped with heavy solenoids. Recently, however, PPM focusing of an electron beam suitable for a millimeter-wave tube has been demonstrated.

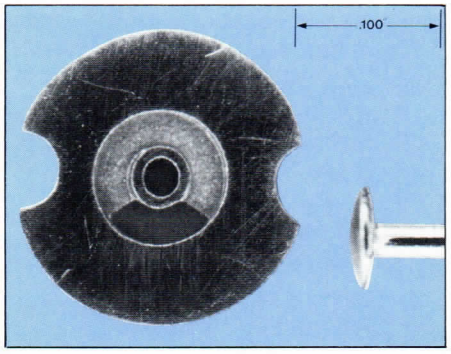

Figure 14 — *Photograph of copper circuit part for a millimeter-wave tube.*

This development was in response to a specific application which called for a lightweight tube and was made possible by the recent development of new magnetic materials capable of extremely high energy products. Aside from the focusing structure, the major challenge in the manufacture of millimeter-wave tubes is the precision and tight tolerances required for the extremely small circuit parts. To illustrate this problem, Figure 14 is a photograph of an OFHC copper circuit part in relationship to the head of a regular sewing needle. From this picture, one can appreciate the small size and the assembly difficulties involved in the fabrication of circuits utilizing these parts.

TWT Design—Inside and Out

The purpose of this section is to give the reader a general insight into the design of TWT devices, their limitations and potential capabilities. Toward the end of the section, consideration is given to power supplies and other "accessories" required to integrate the TWT into a working system.

Electron gun

With increasing performance demands on TWTs, the quality of the electron gun design is a key factor at Hughes. There is, therefore, a specialized group within Hughes which concentrates in gun design, focusing, and related electron-optical problems.

Design tools, such as computer programs for analysis and gun analyzers for experimental evaluation, are continuously upgraded and improved. A file on previously designed guns of all types is maintained for reference and as a basis for new designs.

Electron guns used in traveling-wave tubes are generally convergent. This means that the current density at the cathode, i.e., the cathode loading, is significantly lower than the current density in the beam and below a specified maximum value. Cathode loading is related to the cathode life; reduced cathode loading will allow the cathode to be operated at a lower temperature and will provide a longer cathode life.

The design of high perveance, convergent guns is well established and is based on Pierce's "spherical diode" concept—a conical convergent electron flow with uniform current density in the beam cross-sections. The design procedures provide data on cathode and anode curvatures and their aperture angles, and radii for specified gun design requirements, but do not give sufficient details on the shape of the beam-focusing electrode and anode.

The design of these electrodes can be determined with an electrolytic tank in conjunction with Langmuir's theory. Use of the tank enables the designer to evaluate a variety of electrode shapes and to establish an optimized configuration.

Experimental design methods of this type have recently been replaced by theoretical approaches based on analytical extension methods. The theoretical methods have been computerized and provide faster and much more accurate electrode designs—with improved quality of the gun optics.

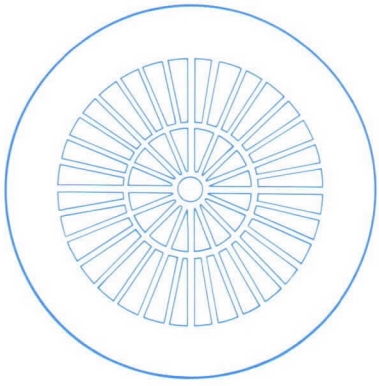

Figure 15 — *Grid with radial vanes.*

Single-gridded guns

It is often required that the current control of guns be accomplished by relatively small voltages. This is possible with a single-grid structure, placed in front of the cathode, provided that the thermal load on the grid due to interception is within acceptable limits.

A commonly used type of grid structure consists of a mesh or, better still, a large number of radial vanes supported by one or two rings. Figure 15 shows a grid structure of this type.

Nonintercepting gridded guns

The insertion of a grid structure into the electron gun will perturb the equipotential distribution in the gun and cause electron-optical lens effects on the electron trajectories passing through the grid.

A portion of the cathode current will also be intercepted by the grid, as determined by the screening factor of the grid. As a result, single-grided guns such as that shown in Figure 16, can only be used for low-average-power tubes because of the thermal power limitations of the intercepting grid.

High-average-power tubes employ, therefore, nonintercepting gridded guns, which use a precisely aligned pair of grids, with the "shadowing" grid closest to the cathode electrically connected to the cathode, as shown schematically in Figure 17.

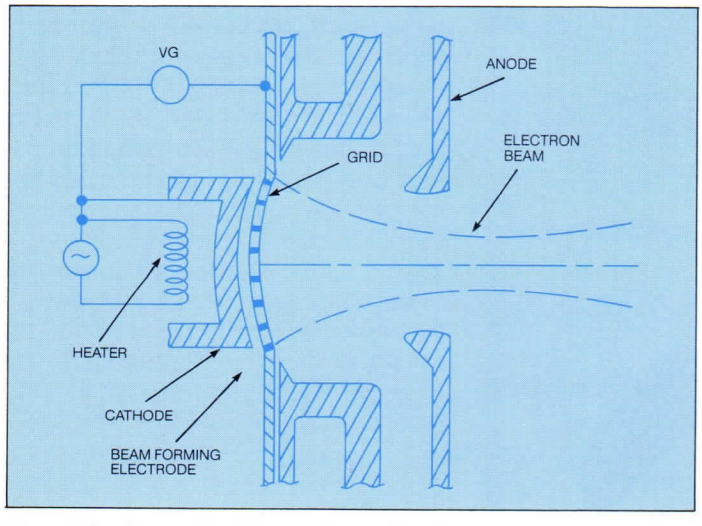

Figure 16 — *Schematic of intercepting gridded gun.*

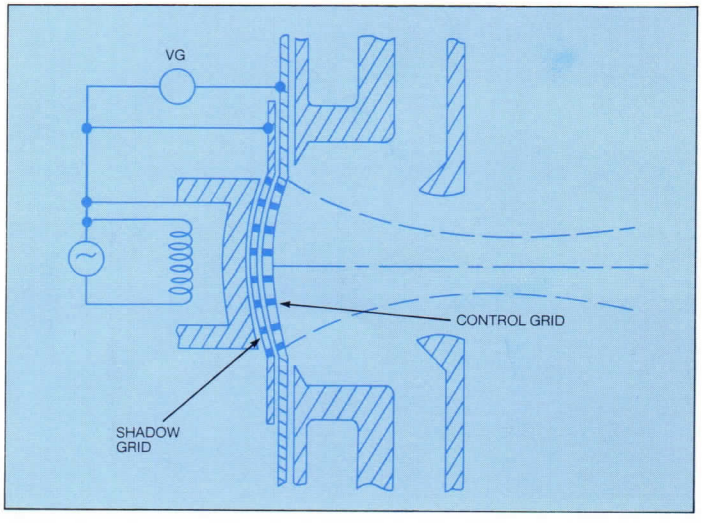

Figure 17 — *Schematic of nonintercepting gridded gun.*

The grid configuration reduces grid interception of the control grid from about 10% to a very small fraction of one percent, thus making it possible to substantially increase the average power capability. Figure 18 shows typical gridded electron gun characteristic curves which determine the specific point of tube operation, as well as the required negative voltage for tube cut-off.

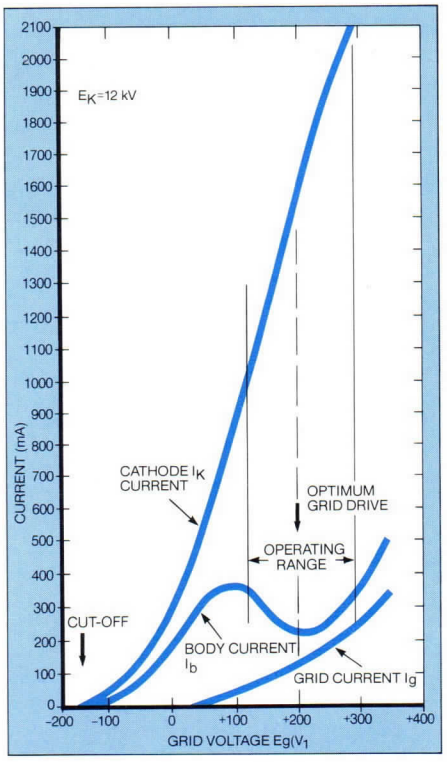

Figure 18 — *Focusing characteristics of gridded gun.*

The focusing structure

All TWTs require some means of holding the cylindrical electron beam in shape as it travels along the inner diameter of the interaction structure. Without a focusing structure, the beam tends to disperse or spread out as a result of the mutual repulsive electrical forces between electrons.

A magnetic field in varied forms is used for this purpose. Such a field of proper magnitude will confine the electron beam to the pencil-like cylindrical shape it must maintain. The four principal types of magnetic focusing discussed here are illustrated in Figure 19.

Of these, the solenoid is still regarded as one of the best magnetic focusing structures. Its magnetic lines are parallel to the direction of travel of the electrons, and it can be accurately aligned with the beam. It provides excellent beam collimation and will continue to be used in applications where the last bit of average power is required from a tube — so long as tube size and weight are not critical factors.

Most of the very-high-power TWTs to date have utilized solenoids. In fact, Hughes has pioneered a technique for wrapping the solenoid directly onto the tube barrel. This optimizes the alignment between the tube axis and the magnetic axis. It also brings the solenoid windings as close to the tube axis as possible, providing the required magnetic field with the very minimum size and weight. A secondary benefit is that less dc power is required to provide the magnetic field.

In certain structures, however, where the interaction structure is short enough, permanent magnet focusing is often utilized in lieu of the bulky solenoid. Because of the length limitations, this type of focusing is generally restricted to low-gain or low-power tubes.

Perhaps the most profound development in beam control has been the evolution of double-period, periodic-permanent-magnet (PPM) focusing — particularly its adaptation to high-power TWTs. Previous to Hughes' patented developments in this field, the fundamental limitations of the PPM design were thought to be

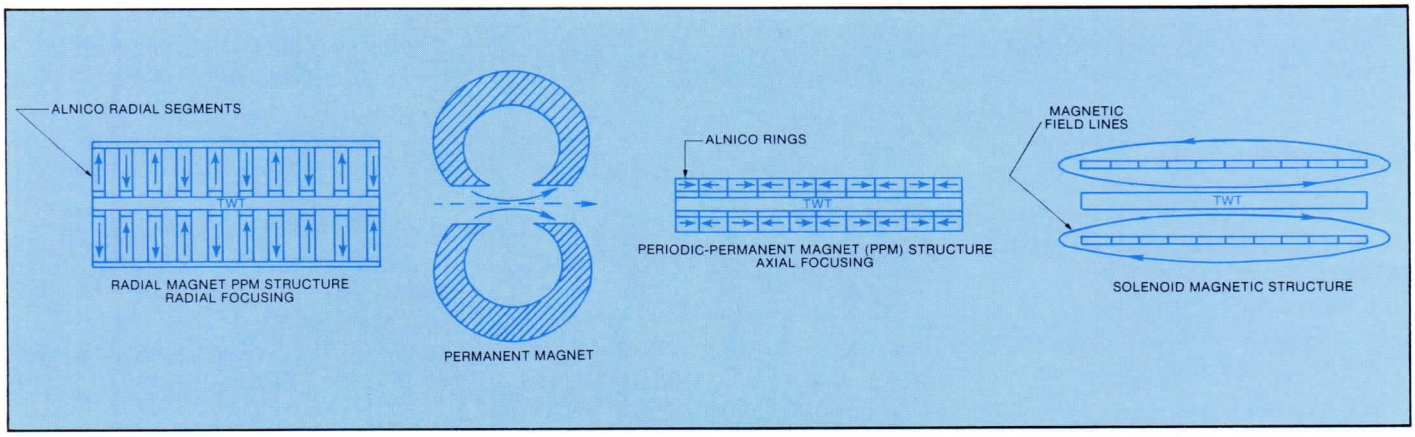

Figure 19 — *Among the four principal methods of magnetic focusing, the solenoid is considered the best choice.*

so restrictive that it could only be utilized in low-power TWTs where the beam power density is typically quite low. Yet one of the greatest needs for this lightweight focusing method has been at the high-power levels required for many airborne and space applications where tubes with focusing solenoids have been too large and heavy. PPM focusing has now been successfully utilized to achieve 12 kW of average beam power in a 125 kW peak power.

Figure 20 shows a cross-section view of the Hughes 774H, a high-power pulsed helix TWT, complete with the focusing structure and external package. The tube is of metal-ceramic construction having a total weight of only five pounds. The PPM focusing structure is composed of round magnet discs shown in the cross-section.

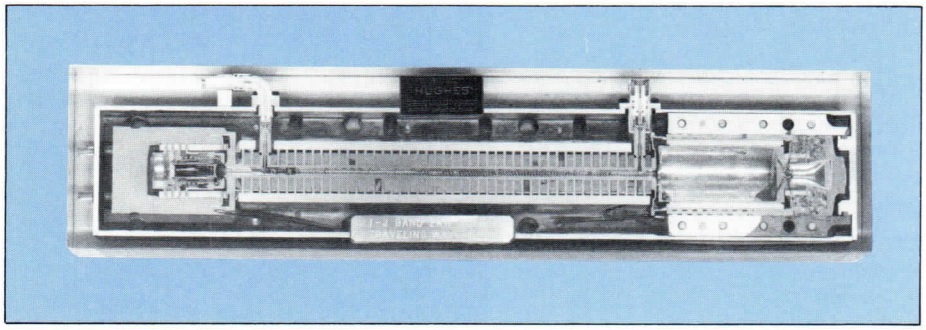

Figure 20 — *The Hughes 774H X-band high-powered helix TWT weighs only five pounds and is rated at 1.25 kW minimum power output with a 0.04 duty cycle.*

Dissipating the beam

The collector dissipates the electrons in the form of heat as they emerge from the slow-wave structure. This is usually accomplished by thermal conduction to a colder outside surface where the heat is absorbed by circulated air or liquid. The specific collector is determined by the method of cooling used and the amount of energy that must be dissipated.

The simplest collector is a single-stage collector with the voltage typically set between 40 and 65 percent of the cathode voltage with the same polarity. In this way the electrons which have been accelerated in the gun, and have had some fraction of that energy removed by the amplification of the circuit wave, are further slowed upon entering the collector — with a resultant recovery of kinetic energy of the beam.

A schematic of a single-stage collector is shown in Figure 21. This type of collector is usually employed when efficiency is not a primary objective or when power supply restrictions only allow a single potential to be available to the collector.

When greater efficiency is required, a doubly depressed collector is used which effectively sorts the electron velocities into two groups. The slower group is collected on the first stage (V_1) as shown in Figure 22. The more energetic group is collected on the second stage (V_2) which is depressed further. The average kinetic energy recovered by a two-stage depressed collector is greater than that of a single-stage collector since more electrons of the spent electron beam are able to be collected on depressed collector electrodes.

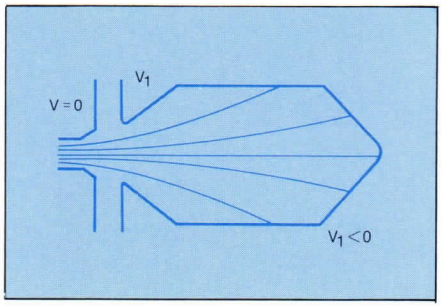

Figure 21 — *Schematic of single-stage collector.*

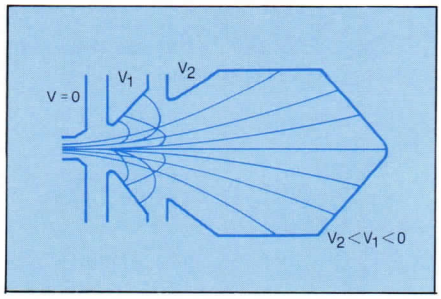

Figure 22 — *Schematic of two-stage collector.*

A three-stage collector provides an even greater degree of electron sorting and is usually employed only when high efficiency is of primary importance. A schematic of a multiple-depressed collector is shown in Figure 23. Here the beam is sorted into three different energy groups, and each stage contributes to the overall recovery of spent beam energy.

It has long been recognized that significant power savings could be obtained in a TWT by decelerating the spent electron beam and collecting it at a reduced potential. Depressed collector operation will, therefore, improve the tube efficiency, as well as reduce the thermal load of the collector and simplify its cooling requirements.

The amount of collector depression is, however, limited by the inherent velocity modulation of the spent beam. A part of the kinetic beam energy, which serves

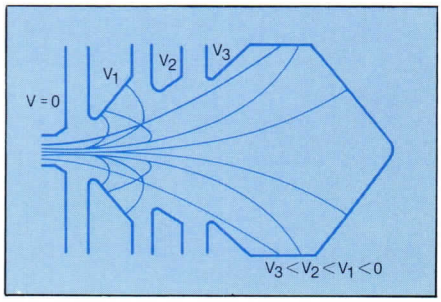

Figure 23 — *Schematic of three-stage collector.*

as the energy source for the traveling-wave tube, is converted into RF power in the interaction region. As a result, the spent electron beam will have a velocity spread, and its average velocity will be reduced.

When the collector potential is depressed to a greater degree than the corresponding velocity of the slowest spent beam electrons, these electrons have insufficient energy to penetrate into the collector. Therefore, their flow will be reversed and backstreaming current is then initiated.

Such backstreaming is undesirable. Not only will it defeat the power-saving purpose of collector depression, but it may also produce an excessive thermal load on the circuit, interfere with the RF performance, and cause instabilities.

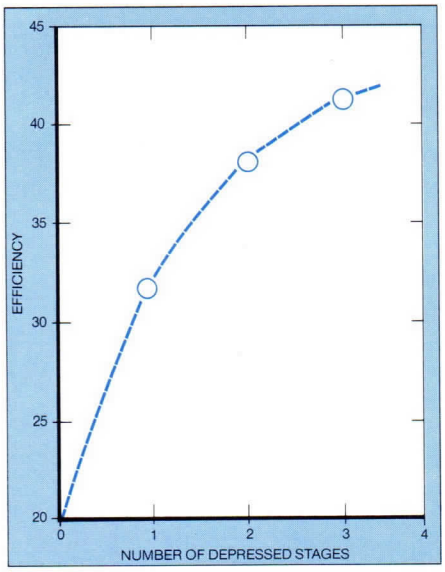

Figure 24 — *Efficiency versus the number of depressed collector stages for S-band traveling-wave tube.*

The incremental efficiency improvement which can be obtained by increasing the number of depressed collector stages diminishes as the number of stages is increased. Efficiency as a function of the number of depressed stages is shown in Figure 24 for a space TWT. For this reason the number of depressed stages is generally limited to three or four.

Multi-stage collectors also offer the advantage of substantial power savings during small signal operation or without RF drive. This, in turn, offers a near constant thermal load, as shown in Figure 25, for a 10-watt device.

The vacuum envelope

One of the major disadvantages of early helix circuit tubes was the fragile glass-vacuum envelope enclosing the tube parts. However, the art of packaging has reached the point where such glass structures are sufficiently well-supported to withstand almost any environment and all but the highest shock or G loads.

A recent innovation, however, in the manufacturing of helix TWTs has been the successful utilization of metal and ceramic materials in place of glass. These tubes can not only withstand higher G loads, but can be vacuum processed at higher temperatures—typically 600° to 700°C as opposed to 450° in the case of glass structures. This ensures considerably more complete "bake-out" of undesirable gasses entrapped in the tube, providing improved reliability at higher tube operating temperatures.

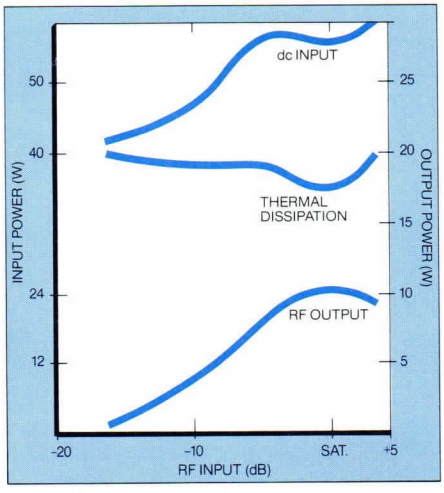

Figure 25 — *Multi-stage collectors offer substantial power savings during small-signal operation or without RF drive resulting in a near constant thermal load.*

In a practical TWT, attenuators (lossy sections) are placed along the helix (slow-wave structure) to provide stability by absorbing internal and external mismatch reflections. The attenuators also isolate external system components on the output arm from those on the input arm. A typical high-grain TWT will provide up to 80 dB or more isolation or "cold" insertion loss. Without this "loss" added to the internal structure, it would be possible for reflected RF power to travel back to the input causing regeneration. In a high-grain device this would, in turn, cause a self-induced oscillation.

Since that portion of the slow-wave structure dedicated to attenuation does not contribute to the gain of the tube, the effect of adding attenuation increases the length of the device. The higher the gain, the more attentuator sections will be required. A rule-of-thumb is about 20 dB per section, so a tube with 50 dB gain would have three active sections and two attentuator sections.

Power supply interface

The TWT and the power supply are the key elements in any power amplifier. Equally important are the interfaces between these elements to insure optimum performance and maximum life of the resultant traveling-wave tube amplifier (TWTA) or high-power amplifier (HPA).

There must be a continuing interaction between the TWT and power supply designers since the design of both elements must go far beyond "voltage and current" requirements. Cooling, protection (TWT and power supply), mechanical and control interfaces require detailed attention.

As a result, today's high performance TWTAs and HPAs are not a power supply designed around a TWT, but rather TWTs and power supplies are designed together (Figure 26) to meet performance and reliability criteria.

The following are some of the interface considerations used in the design and implementation of Hughes HPAs and TWTAs for commercial, military, space, satellite earth stations, radar, ECM, and instrumentation applications.

Power supply regulation need be only as tight as required to meet RF performance characteristics and to prevent defocusing of the TWT electron beam as a function of line, load, and environmental changes. For example, in many cases the TWT collector supply need not be highly regulated to meet these requirements, and can often be left unregulated to vary with line fluctuations. In this case, a highly regulated power supply may be overly complicated and reduce reliability.

Ripple from the power supply and the TWT pushing factors will determine the amount of signal distortion contributed by the TWTA in the areas of amplitude, phase, and frequency modulation. Less sensitive electrodes require less power supply filtering. Conversely, more sensitive electrodes (higher pushing factors) require more power supply filtering to meet sophisticated systems requirements.

ON/OFF control of the TWT is not only important as an operational consideration, but also from a protection viewpoint. Hughes HPA/TWTA circuitry can rapidly detect high helix or body current, arcs, high reflected power and other abnormal conditions. But unless the TWT beam power can be removed equally as fast, the value of this protection feature is compromised. A proven approach for rapid turn-off of the TWT is the use of a modulating anode and associated power supply circuitry.

Time-in circuitry must be designed to provide a reasonable TWT warm-up time from a cold start, and the minimum down time in the event of a momentary power outage. Both direct and proportional type heater timing circuits must assure that the TWT cathode is at the proper operating temperature before application of the beam power. Improper timing can cause TWT out-gassing and failure.

Body/helix current overload protection is a critical consideration in the design of any high-power amplifier. Abnormal TWT defocusing can occur as a result of improper power supply voltages, RF overdrive, output high reflected power, and other conditions. The object of a body/helix protection circuit is to limit the amount of time that defocused electrons can intercept the slow-wave structure to prevent TWT failures. This protection circuitry must be fast-acting and tolerant of normal intercept currents due to TWT aging and turn-on/turn-off characteristics.

Other interfaces such as mounting, cooling, thermal protection, and fail-safe power supply circuitry must be considered to prevent damage to the power supply and TWT in the event of a failure of one of these elements. RF input and output interfaces must not place unnecessary stress on the TWT RF connection and vacuum windows. In summary, both the TWT and power supply should be

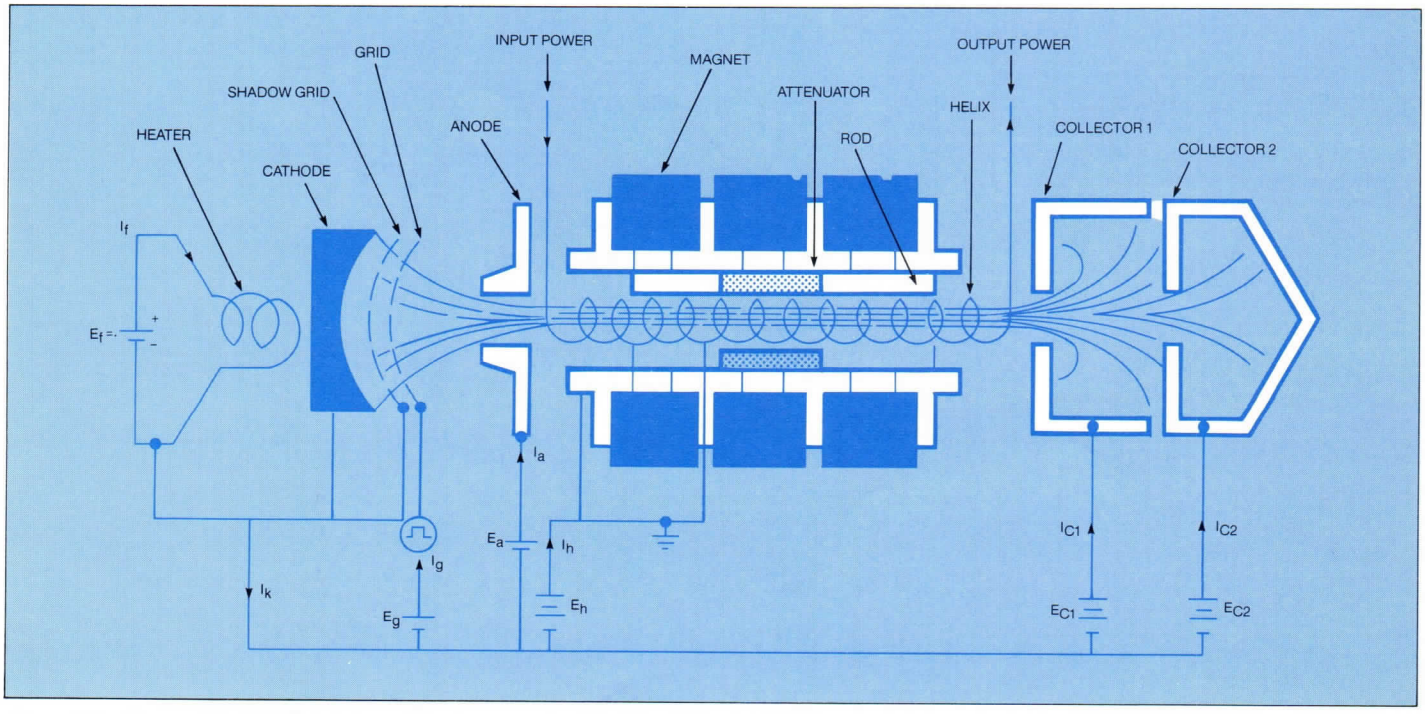

Figure 26 — *Schematic of TWT and power supplies.*

designed together "from the ground up" to insure proper interfaces and a high-quality amplifier for a specific application.

Transmit-receive limiters

Transmit-receive (TR) limiters serve two basic functions. First, they attenuate power entering the receiver during a transmitted pulse to a level which will not harm the receiver or bias it to a temporarily insensitive condition. Second, during receiver on-time, the limiter provides a path of minimum insertion loss, subjecting the receiver to the strongest possible return signal.

Over the last several years, a number of high-pulsed-repetition-frequency radar systems have evolved which require a TR-limiter system that can handle powers on the order of 50 kilowatts, yet display insertion losses of about 0.5 dB and recovery times of less than 5 nanoseconds. This very short recovery time allows monitoring the maximum possible return signal. The Hughes multipactor shown in Figure 27 takes advantage of the principle of multipacting (multiple impacting) to meet these demanding specifications.

Figure 28 shows the relative location of a multipactor TR-limiter system in a simplified radar block diagram. The protective circuit consists of a high-power stage (multipactor) which limits the power to several watts, and a low-power stage (solid-state limiter) which further reduces the power to milliwatts.

Basically, the multipactor section offers protection against three potentially dangerous situations: (1) sharp pulses due to mismatches, (2) high-power arcing at the antenna, (3) the presence of extraneous radar signals.

When the transmitter is on, up to 10% of the transmitted power (50 kW peak) can be reflected due to the impedance mismatch of the antenna. Thus, the multipactor is normally required to limit approximately 5 kW of reflected power to about 8 watts. A more serious limiting problem can occur during transmitter on-time if a high-power arc should develop at the antenna. In this case, up to 80% reflection can occur and the multipactor section must attenuate approximately 40 kW down to 8 watts. In both cases, the limited power is absorbed by the multipacting process and the resulting heat is removed by conduction cooling.

A third limiting process occurs when extraneous radar signals are present. The RF circuit of the multipactor essentially constitutes a bandpass filter. Since the operating band of the multipactor is coincidental with the passband, any out-of-band signals received by the antenna will be reflected and absorbed at port four of the circulator by the dummy load. The multipactor section of the limiter requires no synchronous signal for operation. The first half-cycle of the incident RF wave initiates the multipacting process.

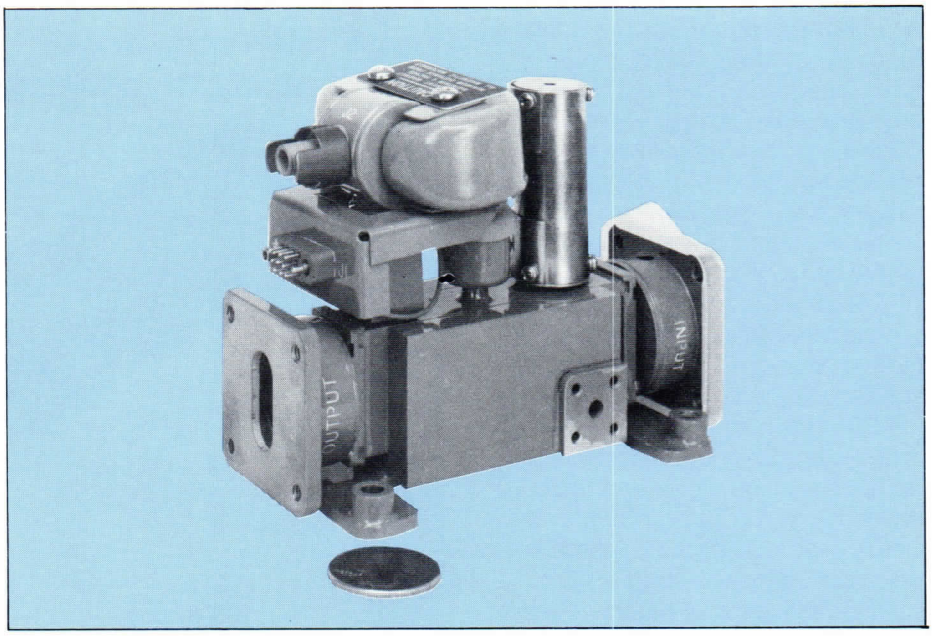

Figure 27 — *Actually a small system, the multipactor limiter operates from unsophisticated power supplies.*

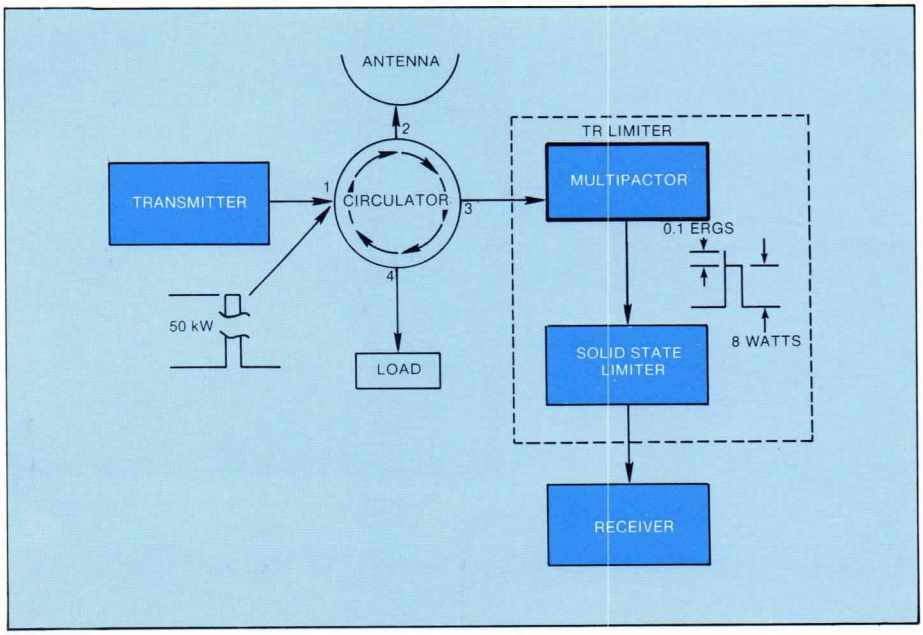

Figure 28 — *Multipactor limiters handle up to 50 kW peak power at X-band.*

How to Evaluate TWTs

The basic considerations in selecting a TWT for a specific application are center frequency, bandwidth, and power output. A number of other parameters must be considered, however, in the specifying process.

Power vs. frequency

When discussing the power capability of TWTs, it is important to make a clear distinction between the peak and average power since these two numbers are limited by totally different considerations. The average power at a given frequency is almost always limited by thermal considerations relative to the RF propagating circuit. The electron-beam focusing is never perfect, and a sizable fraction of the total beam power is intercepted by the RF circuit.

At some point, amenable to calculation, the circuit temperature approaches the melting point of copper, (or the Curie temperature of iron in the case of a PPM TWT). In both cases the tube is close to destruction, and this condition defines the average power capability of that device. Peak RF power capability is closely dependent upon the voltage for which the tube can be designed. The beam current varies as the 3/2 power of the voltage, and the product determines the total beam power.

$$I_{beam} = KV_0^{3/2}$$

where V_0 is the beam voltage.

$$\text{Beam power} = I_{beam}V_0 = KV_0^{5/2}$$

where K is the electron-gun perveance.

With the available techniques for the design of solid-beam electron guns with good optics, the perveance is generally limited to a value not much greater than 2×10^{-6} (MKS units) and most existing power tubes utilize a value between 1 and 2×10^{-6}. Once the perveance is fixed, the required voltage for a given peak beam power is then uniquely determined. This, in combination with practical efficiency values, fixes the peak RF power which the design will support. In turn, the voltage uniquely establishes the circuit parameters. For this reason it can be seen that a TWT can only operate at the design voltage.

Theoretically and practically, these limits for TWTs should be very close to those values which apply to high-power klystrons, since the basic considerations are identical in the two cases. Historically, high-power klystrons came first, and, consequently, most of the early multi-megawatt radars were designed with klystrons as the output amplifiers.

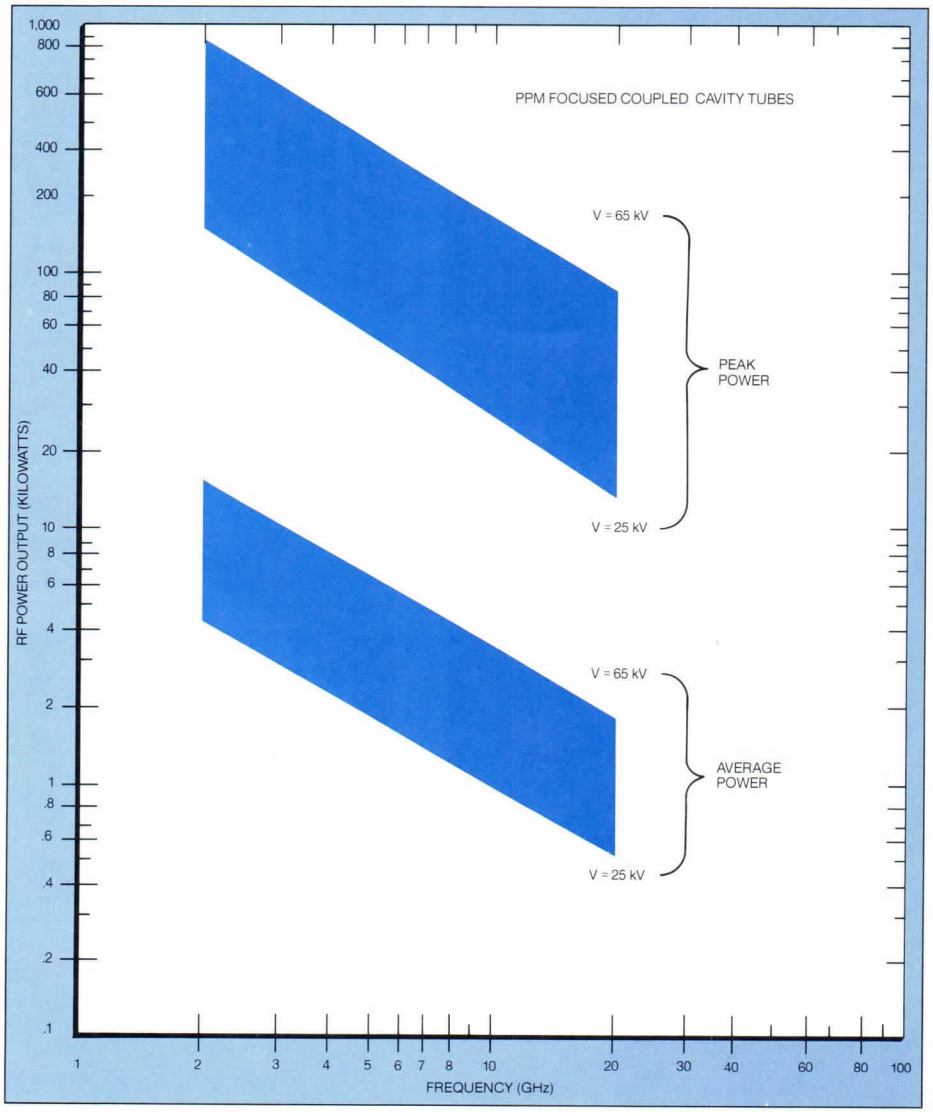

Figure 29 — *Peak-and-average-power capability of typical TWTs in field use.*

There are a few notable exceptions today, but in general, high-power TWTs are available at power levels below 500 kW and voltages below 80 kV. If a requirement should develop for a particular system, there is no reason why a multi-megawatt TWT should not be considered. If, however, available hardware is to be used, probably a klystron or a crossed-field amplifier will be selected.

To give an abbreviated picture of some of the more popular current TWT designs, Figures 29 and 30 illustrate the difference between peak and average power capability and the difference between PPM- and solenoid-focused designs.

The curves follow the general characteristic defined by

power X frequency = constant

which is different from the popular precept of power varying as the inverse square of the frequency.

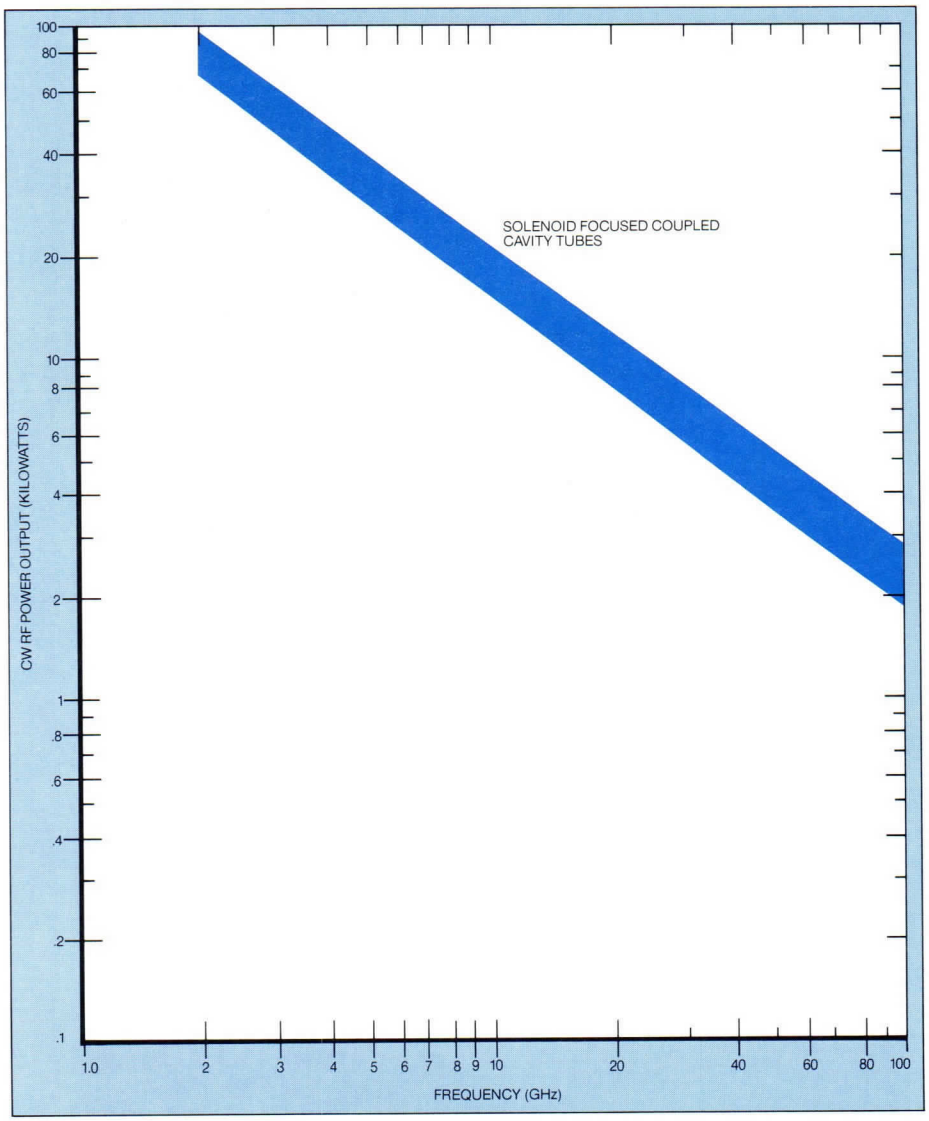

Figure 30 — *CW power capability of TWTs operating at nearly 20 kV.*

Which rule is correct? Both are, but one must be careful how they are applied. If a given design is scaled over a limited frequency range and the thermal stress is to be maintained constant within the circuit, the linear relationship applies. If one desires to scale a particular device to its ultimate limit in terms of power and frequency such that all of the key parameters are pushed to the state-of-the-art (that is, beam density, cathode loading, magnetic field, voltage, etc.), then the quadratic dependency is more appropriate.

It will be noted that if the voltage is increased, the peak and average power capabilities increase considerably. This variation is a direct consequence of the way in which the circuit dimensions and the peak beam power increase with voltage. The larger circuit will accommodate a greater amount of thermal dissipation, and the higher beam power will permit more peak RF power.

At some point the peak RF power will be limited by waveguide arcing problems and voltage breakdown in the electron-gun region. The curves shown go up to 65 kV, which is certainly not the limit, but encompass the great majority of TWTs in field operation.

The CW curve is shown for 20 kV, which is a voltage region representing a good compromise between voltage insulation problems in the power supply and circuit size for reasonable thermal stress levels. The upper boundary of the curve is a conservative design boundary and can easily be exceeded by a factor of two for special applications requiring more average power. Here again, the same rule of power-frequency product being a constant is maintained for the same reasons previously stated. The curve shown does not indicate bandwidth capability, even though this parameter affects average power capability. In general, for very large percentage bandwidths, the average power capability may have to be reduced as much as 50%.

Efficiency

During the early years of TWT development, when the emphasis was on bandwidth, gain, and noise figure, most TWTs were regarded as low-efficiency amplifiers, compared to the more conventional microwave sources such as klystrons and magnetrons.

Industry was slow to change this viewpoint, believing that inherent in the energy transfer process between the electron beam and the RF wave were physical constraints causing the low efficiency. Certainly the experimental evidence from a large number of designs indicated a typical efficiency of 10% or even less. Klystrons at comparable frequencies and power levels gave more than 30% conversion efficiency during the same period in time. The price for large bandwidth capability was thought to be a poor-to-modest efficiency.

Only slowly did researchers discover the key parameters which had to be carefully controlled to significantly improve upon this picture. Improved control of the electron beam trajectories contributed a great deal in changing the situation since the efficiency enhancement achievable with simple depressed collectors was very encouraging. Experimental work became more precise and the data more predictable, allowing theoretical efforts to be evaluated with quantitative results.

Many theories were advanced which presumably should have yielded the same information since they were all based on the same physics. However, considerable disagreement existed, mostly because investigators could not obtain repeatable experimental data. In the last few years, great progress has been made to eliminate this confusion, and real advances have been achieved in efficiency enhancement. The 50% efficiency barrier has been broken a number of times and, like the 4-minute mile, this is no longer regarded as an upper limit dictated by nature.

There are two fundamental mechanisms whereby increased efficiency can be realized in a TWT amplifier. The first mechanism is collector depression, or a series of collectors which can be depressed well below the circuit potential so that unused energy can be recovered from the spent electron beam. Such a collector must be carefully designed optically so that an excessive part of the beam is not turned around and deposited on the circuit.

The optics of such a system are quite complicated and depend not only upon the geometry of the collector segments, but also upon the degree of RF modulation, the magnetic field used to focus the beam, and the relative potential of the circuit and all the segments of the collector.

The main advantage of working with the collector to enhance the overall efficiency is that such an alteration does not affect the circuit of the TWT and can, therefore, be accomplished independently of the RF design of the tube. The power supply, of course, must be properly designed to take advantage of the energy recovered by the depressed segments of the collector.

The second mechanism of efficiency enhancement is sometimes referred to as velocity resynchronization. It is well known that the electron beam slows down in velocity when it gives up energy to the amplified RF wave on the circuit. As a result, the propagating wave and the electron beam progressively lose synchronism, with the wave moving far ahead of the beam. When this occurs, the electron bunches are no longer favorably phased to give up energy to the moving wave, and the amplification process ceases before maximum signal level is achieved.

External measurements merely show a lower efficiency than that which one might reasonably expect. Early models of TWTs almost always gave disappointing efficiencies because of this unfavorable condition within the tube's interaction region.

First-order corrections for a lack of synchronism between the beam and the wave can be done with a mere increase in the operating voltage. Unfortunately, this step causes the amplification process to suffer in the small-signal region (near the input) of the circuit, and it also causes the linearity of the output versus input curve to degrade. It would appear that an easy solution to this problem would be to make the RF wave velocity on the input circuit different from that on the output circuit such that synchronism could be maintained everywhere.

This simple concept resulted in the "tapered velocity"-type circuit, which is one of the basic tools that the TWT designer now frequently employs. In practice, there is an infinite variety of tapers that differ in the degree of velocity change and the variation of velocity as a function of distance along the slow-wave structure.

Determining a satisfactory configuration requires the use of a large-scale computer to simulate the nonlinear interaction process between a stream of highly bunched electrons and a growing electromagnetic wave propagating along the circuit. Any choice must be a result of a series of compromises which trade one desirable effect for another.

Some of the considerations are based upon second-order effects that are extremely difficult to evaluate quantitatively, and yet collectively these effects are quite important. A great amount of controversy still exists among the experts as to precisely what represents the optimum solution.

Some disagreement will always exist, because the desired performance depends upon the user's requirements in terms of complexity and the criticality of the adjustments. Even more important is the required bandwidth, since for ECM systems, octave bandwidths are quite common. Over such an extreme bandwidth, the important electrical parameters, which are proportional to wavelength, change by a factor of two or more. It is not surprising that optimum conditions within the velocity taper region are impossible to maintain.

In spite of this problem, recent results from efficiency enhancement schemes for ECM power amplifiers are indeed impressive and perhaps would cause one to doubt the difficulty of meeting all of the criteria in the taper design. Figure 31 illustrates the efficiency of a kilowatt helix-type high-gain ECM TWT. It should be noted that the frequency coverage is 1½ octaves with an efficiency above 45%.

An example of the performance obtainable with velocity resynchronization is shown in Figure 32 where the efficiency of a coupled-cavity tube is shown to be in excess of 50% over the entire operating band. This particular form of velocity resynchronization was achieved with a "voltage jump" whereby the beam near the output of the circuit is accelerated by a boost in the operating voltage. Although simple in concept, this scheme is quite difficult to implement in a practical high-power tube where the operating voltage is high. The output circuit boost was 8 kV in the example illustrated, which means that excellent insulation must be provided without disturbing the RF propagation characteristics of the structure. In a helix tube, where the circuit is a continuous-wire conductor, a voltage discontinuity is very difficult to accommodate because of RF reflections from the break, while in a coupled-cavity circuit, the outside boundary of the cavity walls is generally grounded, which creates an insulation problem. Figure 33 is a schematic drawing of the cross-section of the circuit of the TWT showing how the voltage-jump isolation was accomplished.

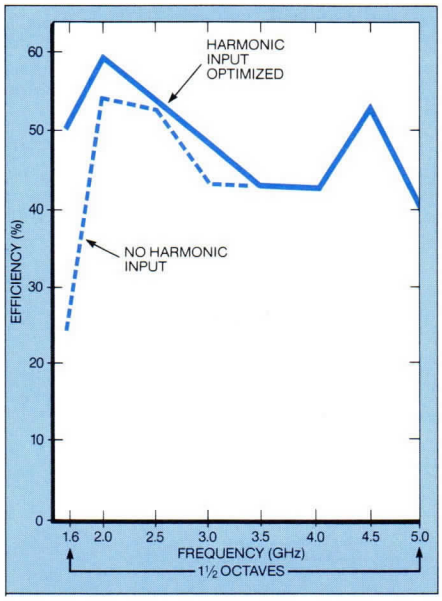

Figure 31 — *Broadband high-efficiency TWT.*

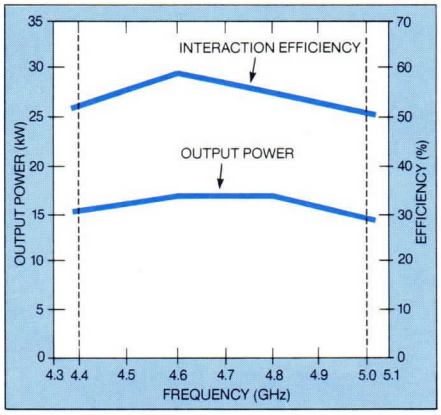

Figure 32 — *High-efficiency coupled-cavity TWT.*

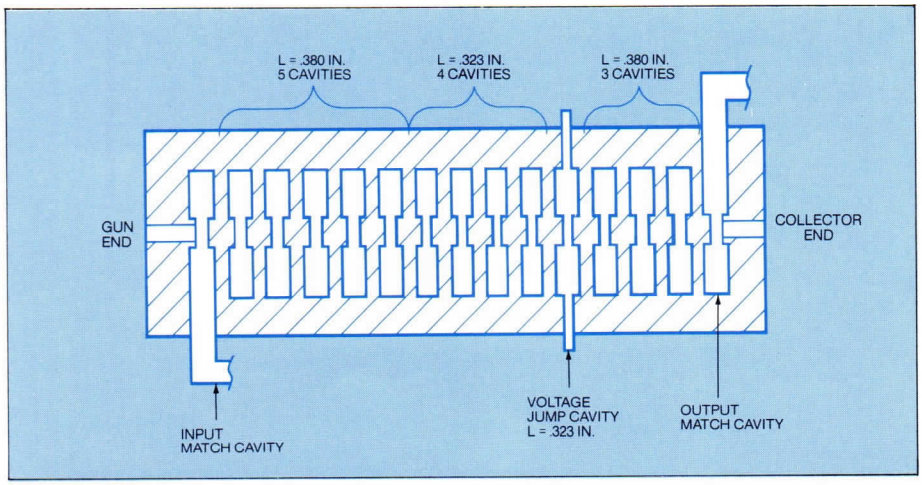

Figure 33 — *High-efficiency voltage-jump TWT.*

Harmonic injection

Another method of efficiency enhancement, unique to broadband helix devices, does not involve any alterations of the internal parts of the TWT.

It is generally referred to as "harmonic drive" because it is associated with special adjustments made to the second-harmonic content of the input RF signal. The solid portion of the curve of Figure 31 shows the additional enhancement which is afforded with "harmonic drive."

The phenomenon was discovered quite some time ago when it was observed that the wrong type of second-harmonic input would seriously degrade the power output at the fundamental frequency. On the other hand, the correct amount of second harmonic, properly phased, will increase the fundamental power output and suppress the second harmonic at the output of the amplifier.

This process is one of cancellation, whereby the injected second-harmonic signal is such that it is 180° out of phase with the second-harmonic signal generated by the nonlinear processes inherent in the interaction mechansim. With careful design of the input circuit, this cancellation can be made reasonably noncritical and quite broadband.

The effect is only important at the low end of the tube's amplification band since the second harmonic of these frequencies still lies within the amplification band of the TWT. Above midband, there is no appreciable amplification of the second-harmonic signals, and, consequently, the enhancement scheme is not effective above this point.

To provide the correct harmonic input signal, a simple circuit consisting of a phase shifter and a microwave diode can be utilized to transform a pure drive signal to one with a significant second-harmonic component. If the drive signal emanates from an overdriven TWT (one operating well into saturation), it is quite likely that the second-harmonic portion is large to begin with and of the wrong phase. It is difficult to compensate for such a drive signal since the adjustments will be generally quite critical and subject to change as the drive level changes.

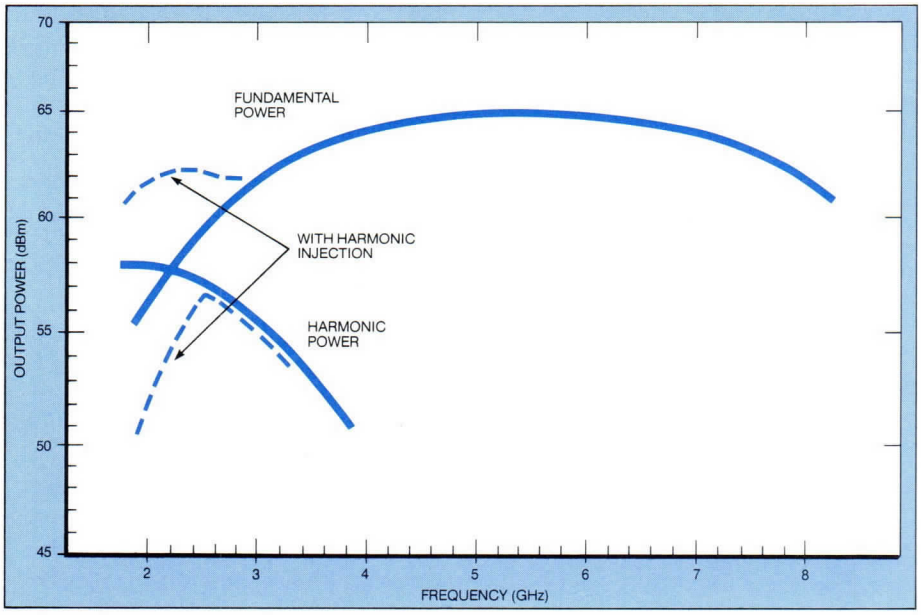

Figure 34 — *Fundamental and harmonic output power of wideband helix tube with or without harmonic injection (measured).*

Harmonics

Due to the wide bandwidth and high gain of the TWT—plus the fact that in saturation, the tube acts as a non-linear device—there will be harmonics in the RF output spectrum. Typically, at saturation for a narrowband application, the second harmonic will be 8 to 10 dB below the fundamental signal. However, very broadband devices will have a higher second-harmonic content.

Other higher-order harmonics will also be present to a lesser degree. The harmonic magnitude is a function of the fundamental frequency and bandwidth range, with the lower band edge signals having the greater effect.

The harmful effects of harmonic interaction in multi-octave TWTs can be minimized by injecting a coherent harmonic signal at the input of the tube, simultaneous with the fundamental signal.

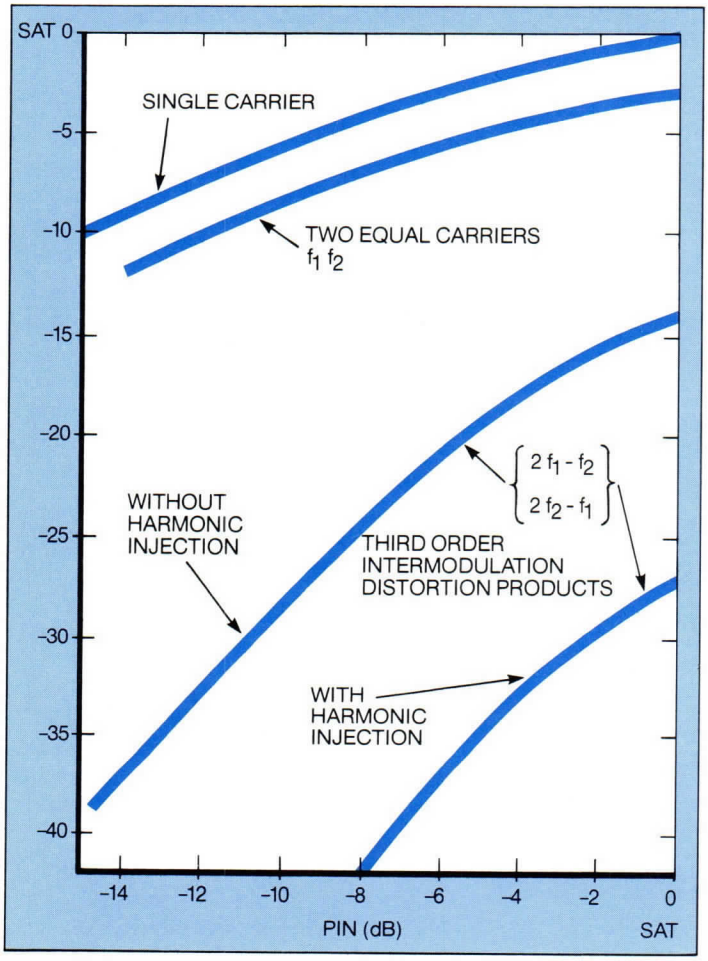

Figure 35 — *Third-order intermodulation distortion with and without harmonic injection (measured with two equal carriers).*

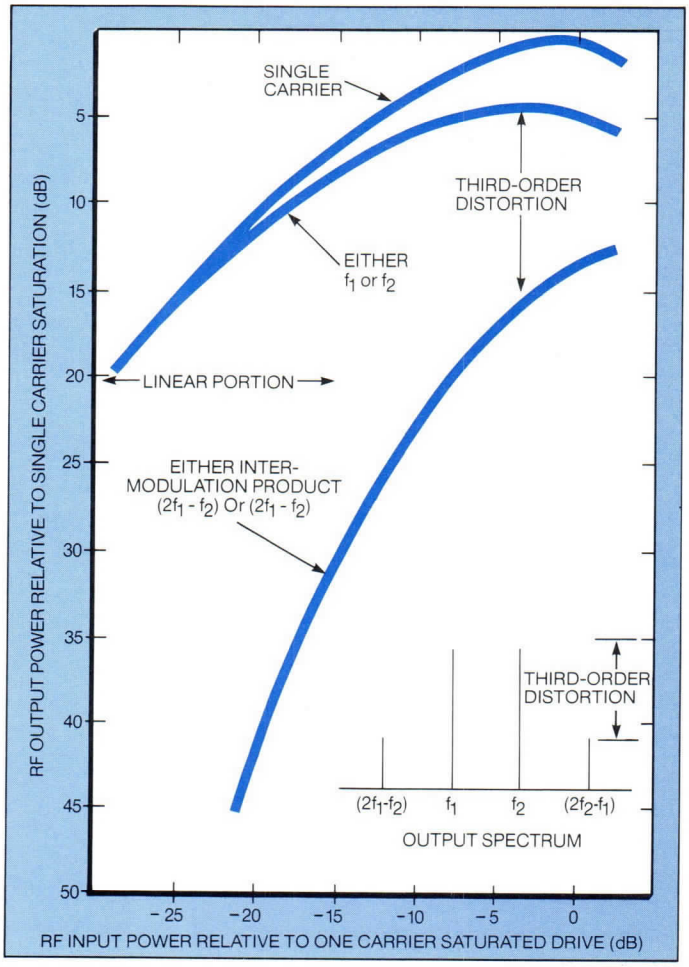

Figure 36 — *Typical third-order intermodulation data for Intelsat IV type TWT.*

When the phase and the amplitude of the injected harmonic signal are optimized, the degrading effects of harmonic interaction can be minimized—resulting in an efficiency enhancement at the fundamental, as well as a reduction of the harmonic output power and an improvement in intermodulation performance. All of these effects are shown in Figures 34 and 35. The coupled-cavity circuit, due largely to its filter-type characteristic, has less harmonic content in the output signal. The harmonic content of these tubes is seldom greater than 20 dB below the fundamental.

Intermodulation distortion

When more than one carrier is introduced at the TWT input, a mixing, or intermodulation (IM) process, takes place. This results in intermodulation products which are displaced from the carriers at multiples of the difference frequency.

The power levels of these intermodulation products are dependent on the relative power levels of the carriers and the efficiency of the TWT. In the case of two balanced carriers, Figure 36 shows the variation of carrier and IM product power level with total drive power. The single carrier power curve is also plotted for comparison. As in the case with AM/PM conversion (see below), the IM distortion is significantly reduced in the small-signal (linear) region of the RF drive range. For this reason, communication TWTs are normally operated well below their saturation power level.

Transfer curves

The drive characteristics of an ideal TWT are shown in Figure 37. The threshold of useful operation is determined by the bandwidth and noise figure of the tube. The dynamic range is that region between the threshold input level and the input at which there is departure from small-signal or linear gain. The gain continues to decrease for approximately 6 dB to the point of saturated power output.

The overdrive capability of a TWT indicates the range over which the output power will remain in the saturation region as input is increased. When further input is applied, output power decreases. For

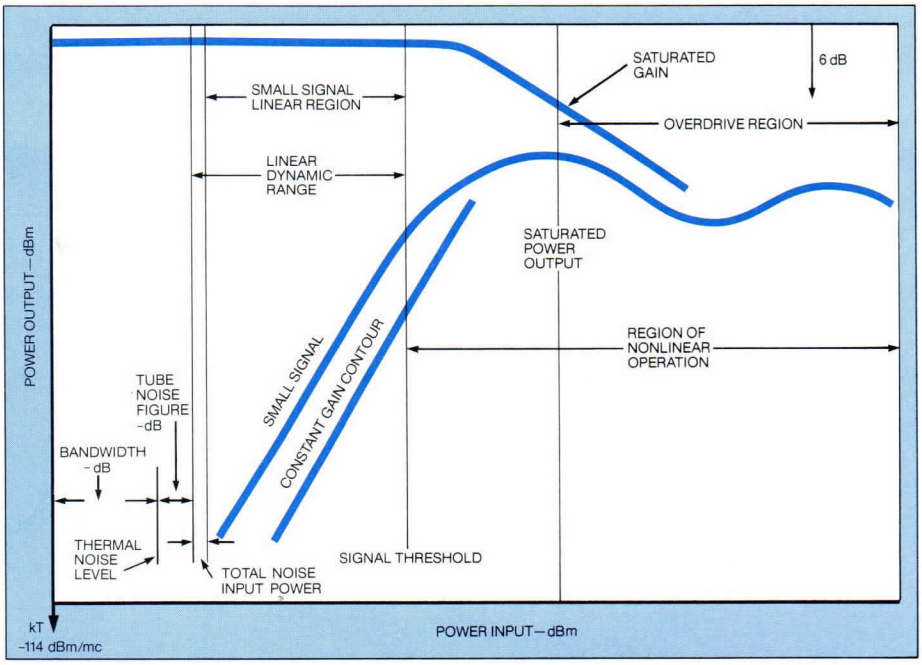

Figure 37 — *Dynamic characteristics of the traveling-wave tube.*

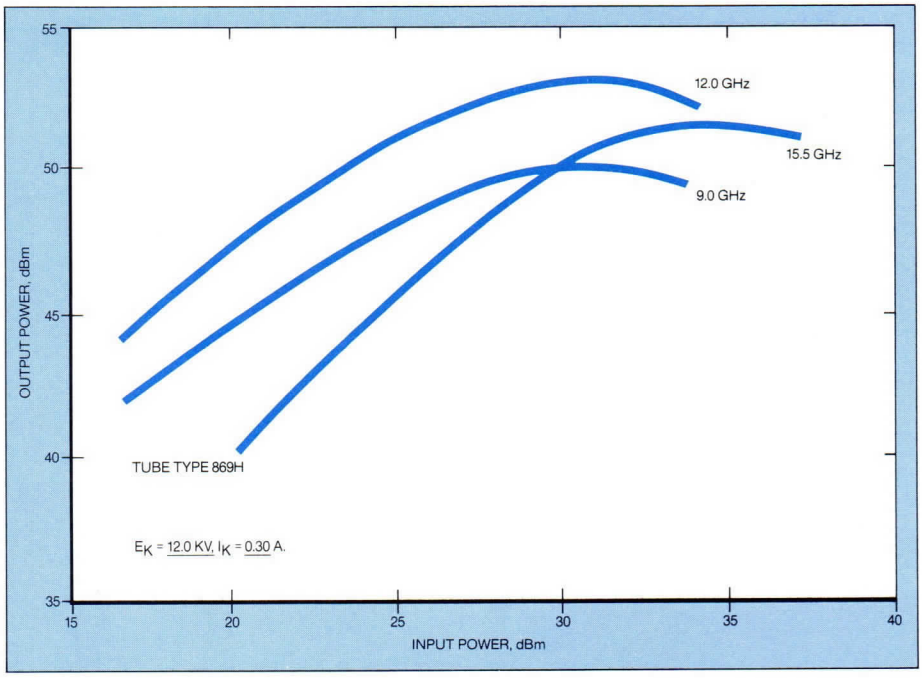

Figure 38 — *Transfer characteristic.*

certain applications, it is desirable to maintain full or saturated power output over a broad range of input signal conditions. Limiter actions to achieve this objective are in the design of the RF structure, use of multiple attenuators, and cascading two TWTs with additional equalizers and isolation filters.

Figure 38 shows the transfer characteristics of the Hughes 869H for three frequencies within the band.

AM/PM conversion

Amplitude modulation/phase modulation (AM/PM conversion) is defined as the change in phase angle between input and output signal as the input signal varies. This factor is measured dynamically and is expressed in degrees per dB at a specified value of power output.

AM/PM conversion in a TWT is due to the reduction in beam velocity as the input signal level increases, causing a greater energy exchange between the beam and the input RF wave. At a level 20 dB below the input required for saturation, AM/PM conversion is negligible. Beyond this point, AM/PM conversion increases sharply.

A typical power output and relative phase shift characteristic is shown in Figure 39 for a TWT. Here it is seen that phase shift is relatively insensitive to drive in the small signal ("linear") portion of the RF output power characteristics. As the TWT is driven into saturation, the rate of phase change increases and then decreases as the power saturates. The slope of this line, or AM/PM conversion, is plotted against RF drive in Figure 40.

The peak AM/PM generally occurs at a drive level 3 to 10 dB below saturation drive and is frequency dependent. The value of AM/PM conversion is less at the low-frequency end of the tube's passband than at the high-frequency end. The curves show typical performance at the high end of the band, which is, of course, the worst case.

The information in the charts applies to the case of a single carrier. For two or more carriers, transfer takes place, giving PM at the output on one carrier due to AM at the input on the other. The general trend with drive is similar for this case, but the specific values are different and are also a complicated function of the relative carrier amplitudes.

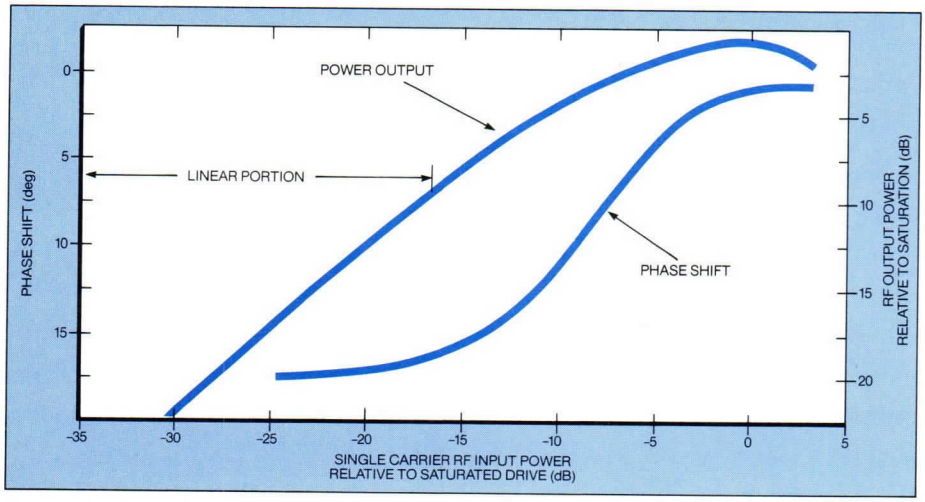

Figure 39 — *Typical power output and phase shift as a function of RF input power for a communications type TWT.*

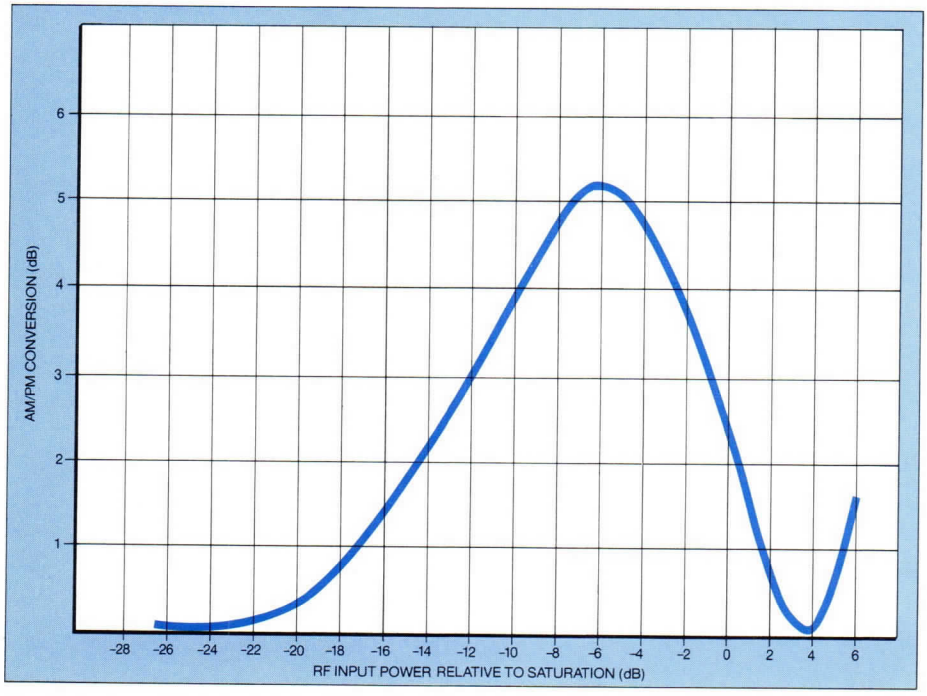

Figure 40 — *For a single carrier condition, AM/PM conversion rises sharply as drive is increased.*

Phase sensitivity

Any factor which affects the velocity of the electron beam will give rise to phase changes in the RF output signal. If the disturbing factor varies with time, then the result will be phase modulation of the input RF signal. The primary factors affecting the velocity of the beam are cathode temperature, magnetic fields, grid voltage, anode voltage and cathode voltage.

The power supply designer must take into consideration these phase-pushing factors when designing the power supplies for a TWT, since the system noise requirements will dictate the power supply ripple and stabilities that must be maintained. Typical values for TWTs are:

35 degrees per 1 percent change in cathode voltage,
5 degrees per 1 percent change in grid drive,
2 degrees per 1 percent change in anode voltage,
.01 degrees per 1 percent in filament voltage.

These values should be considered as order of magnitude since the actual value for any specific tube will be a function of many factors such as type of circuit, gain, perveance, etc.

Phase linearity

Phase linearity is normally expressed as either group delay or as a deviation from linearity in degrees.

The phase-versus-frequency characteristics of a TWT are related to the transit time of the RF signal traveling from the input to the output of the tube. Non-uniformities within the tube give rise to phase ripples which are magnified as a result of reflections both within and external to the tube. To minimize phase perturbations, it is necessary to have a low VSWR for both the source and load. In addition, it is necessary for the tube designer to achieve not only a uniform circuit characteristic but also extremely good matches within the tube when internal severs or terminations are employed.

The slow-wave structure for helix tubes is normally quite uniform without any abrupt discontinuities. The use of computer-controlled machines to fabricate the slow-wave structure has helped to perfect this uniformity such that phase flatness (group delay) can be held to very tight tolerances.

Since the slow-wave structure of a coupled-cavity tube is composed of discrete elements and the termination is more abrupt, phase linearity is much more difficult to achieve.

For applications requiring flat phase response, Hughes has developed a patented technique. Employing this method, Hughes has achieved group delays of less than 1.5 nanoseconds peak to peak.

Phase tracking

In many systems a requirement exists to operate TWTs in parallel. In this type of operation it is important that the phase variations of those tubes operated in parallel are as close as possible to being identical.

It is not so important that the total phase shift through the tubes be the same, since a phase shifter can be employed to adjust the phase delay through the tubes at any particular frequency. It is important, however, that the variation over the frequency band of interest be similar.

Helix TWTs can be designed to have tube-to-tube phase tracking of five degrees or less, provided care is taken to minimize reflection effects and fine grain variations. It is more difficult to maintain close phase tracking in a coupled-cavity tube, and variations of between 10 and 15 degrees are to be expected.

Noise figure

The noise figure (NF) expressed in dB is a measure of the degradation in signal-to-noise (S/N) ratio with passage of the signal through a given tube and can be expressed as follows:

$$NF = \frac{\text{Input S/N}}{\text{Output S/N}}$$

The primary source of noise in a TWT is related to the density and electron velocity variations within the electron beam. The level of the noise power is related to the number of electrons and the size of the electron gun and its beam optics.

For medium power (10 watts) tubes, the NF is typically 30 to 35 dB and increases with power and frequency.

Noise power output

For some applications the noise power output (NPo) is of prime importance and may be measured by terminating the input and measuring the NPo at the output of the TWT. The NPo can be calculated from the following equation with all parameters stated in dB:

NPo = −114 + (BW) + (Gss) + (NF)

where:

−114 dBm/MHz Thermal Noise with input terminated

BW = System bandwidth and can be determined from the following table:

BW (MHz)	dB
1	0
10	10
1000	30
2000	33

Gss = Small Signal Gain

NF = Noise Figure

Due to the broad-band nature of TWTs, the measured NPo is much greater than calculated; therefore, to determine a realistic NPo the noise figure-gain product should be integrated across the total bandwidth.

Dynamic range for linear operation

The linear region is defined as the limit of linear operation at the point where increasing the RF input signal results in a gain compression of 1 dB. (See Figure 41.) This point is called the 1 dB compression point. Therefore, the dynamic range for linear operation may be defined as the ratio of this maximum input signal to the reference noise level of the TWT.

the tendency to oscillate at the circuit mode edge and render a given TWT completely stable over a wide range of operating voltages.

Relative to the stability of a complete amplifier (TWTA), the beam (cathode) power supply is of great importance. This supply determines the velocity of the electron beam which affects the stability of the TWT.

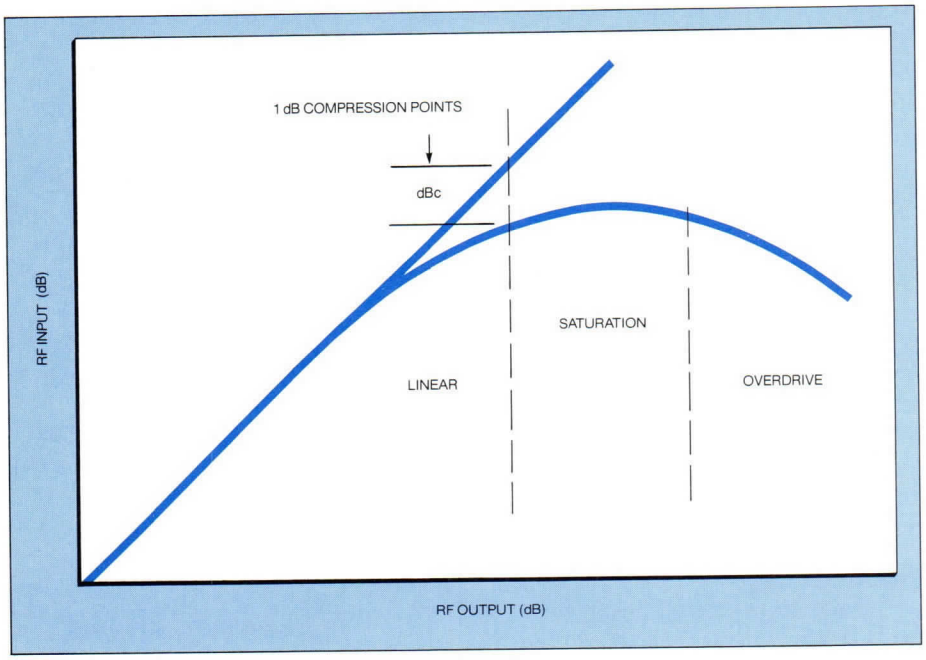

Figure 41 — *RF output dB.*

Spurious outputs and stability

Spurious outputs are minimized and stability is assured through proper designs of the electron beam optics and magnetic focusing. In addition, the processing and fabrication of the TWTs must be carefully controlled. Spurious oscillation is eliminated or minimized by oscillation suppression techniques, such as special attenuation patterns on the support rods of helix TWTs and loss buttons (Hughes' patented technique) in coupled-cavity TWTs. These techniques effectively suppress

Reliability/life

Traveling-wave tubes have, over the years, gained a reputation for high reliability and long life. There are many factors that affect these parameters, such as the basic design, the interface, protective measures, handling, installation/operation and storage.

Basic design

The most important factor relative to life is the type of cathode and the cathode loading factor. In addition, special attention must be paid to electrode size, shape and spacing. The method of packaging must meet the vibration and shock requirements for the application. And to meet wide temperature ranges and high altitude (space) requirements, consideration must be given to the cooling technique; i.e., conduction, liquid, air, heat pipes, etc. Potting and conformal coating must ensure an arc-free and nearly corona-free device.

Interface

The operation of TWTs must be confined to the limitations of the operating and environmental parameters for which the tube was intended. Some of these parameters can be eliminated and the interface effort minimized by taking advantage of the "black box" concept; i.e., TWT and power supply are built by Hughes and supplied as an integrated unit. This approach limits the interface to the drive signal, RF input and output loads, and input voltage.

Protective measures

Steps must be taken to provide protective measures so that the TWT is not exposed to abnormal extremes, such as voltage surges, temperatures, load mismatches, system arcs, and loss of cooling. All TWTs and TWTAs are supplied with operating instructions and test performance data. Special attention should be given to the recommended precautions and operating instructions.

Handling

Careful handling of the TWTs during shipment and installation is advisable so that the exposed high-voltage connections, ceramic seals and RF connectors are not damaged.

Installation/operation

Care must be taken during installation so that no strain is put on the RF connectors. On TWTs with SMA connectors, precautions should be exercised as to the amount of torque applied to the connectors. The waveguide mating flanges should be clean, smooth and flat so that a good mechanical, as well as RF connection, can be made. Polarity of the applied voltages and the direction of cooling liquid or air flow require cautious observation.

Storage

If at all possible, the original shipping container should be retained and used for storing the TWT and for any future handling or moving which may be required. Liquid-cooled TWTs must be free of coolant prior to storage. In addition, the specified storage temperature limits must not be exceeded.

NO POSTAGE
NECESSARY
IF MAILED
IN THE
UNITED STATES

BUSINESS REPLY MAIL

FIRST CLASS PERMIT NO. 457 TORRANCE, CA

POSTAGE WILL BE PAID BY ADDRESSEE

HUGHES ELECTRON
DYNAMICS DIVISION
3100 W. Lomita Blvd.
Torrance, CA 90509

I am interested in the following products:

- Radar and ECM TWTs
  - ☐ Pulsed ☐ CW
- Communications TWTs and TWTAs
  - ☐ Space type CW TWTs
  - ☐ Space type CW TWTAs
  - ☐ Ground Terminal TWTs
  - ☐ Ground Terminal TWTAs
- ☐ TWT Amplifiers
- ☐ Instrumentation Power Amplifiers
- ☐ Klystrons

In particular, model number(s) or power/frequency:

_____

_____

My application is: _____

_____

My schedule is: ☐ Immediate ☐ Future ( ) mos.

☐ Please have your local sales engineer contact me to discuss my application.

☐ Please send me an additional copy of your *Hughes TWT and TWTA Handbook.*

Name

Title

Company

Address

City

State Zip Code

Phone

NO POSTAGE
NECESSARY
IF MAILED
IN THE
UNITED STATES

BUSINESS REPLY MAIL

FIRST CLASS PERMIT NO. 457 TORRANCE, CA

POSTAGE WILL BE PAID BY ADDRESSEE

HUGHES ELECTRON
DYNAMICS DIVISION
3100 W. Lomita Blvd.
Torrance, CA 90509

I am interested in the following products:

Radar and ECM TWTs
- ☐ Pulsed ☐ CW

Communications TWTs and TWTAs
- ☐ Space type CW TWTs
- ☐ Space type CW TWTAs
- ☐ Ground Terminal TWTs
- ☐ Ground Terminal TWTAs

- ☐ TWT Amplifiers
- ☐ Instrumentation Power Amplifiers
- ☐ Klystrons

In particular, model number(s) or power/frequency:

_____

_____

My application is: _____

_____

My schedule is: ☐ Immediate ☐ Future ( ) mos.

☐ Please have your local sales engineer contact me to discuss my application.

☐ Please send me an additional copy of your *Hughes TWT and TWTA Handbook.*

Name _____

Title _____

Company _____

Address _____

City _____

State _____ Zip Code _____

Phone _____

NO POSTAGE
NECESSARY
IF MAILED
IN THE
UNITED STATES

BUSINESS REPLY MAIL

FIRST CLASS PERMIT NO. 457 TORRANCE, CA

POSTAGE WILL BE PAID BY ADDRESSEE

HUGHES ELECTRON
DYNAMICS DIVISION
3100 W. Lomita Blvd.
Torrance, CA 90509

I am interested in the following products:

Radar and ECM TWTs
- ☐ Pulsed ☐ CW

Communications TWTs and TWTAs
- ☐ Space type CW TWTs
- ☐ Space type CW TWTAs
- ☐ Ground Terminal TWTs
- ☐ Ground Terminal TWTAs

- ☐ TWT Amplifiers
- ☐ Instrumentation Power Amplifiers
- ☐ Klystrons

In particular, model number(s) or power/frequency:

_____

_____

My application is: _____

_____

My schedule is: ☐ Immediate ☐ Future ( ) mos.

☐ Please have your local sales engineer contact me to discuss my application.

☐ Please send me an additional copy of your *Hughes TWT and TWTA Handbook.*

Name _____

Title _____

Company _____

Address _____

City _____

State _____ Zip Code _____

Phone _____

NO POSTAGE
NECESSARY
IF MAILED
IN THE
UNITED STATES

BUSINESS REPLY MAIL

FIRST CLASS PERMIT NO. 457 TORRANCE, CA

POSTAGE WILL BE PAID BY ADDRESSEE

HUGHES ELECTRON
DYNAMICS DIVISION
3100 W. Lomita Blvd.
Torrance, CA 90509

I am interested in the following products:

Radar and ECM TWTs
- ☐ Pulsed ☐ CW

Communications TWTs and TWTAs
- ☐ Space type CW TWTs
- ☐ Space type CW TWTAs
- ☐ Ground Terminal TWTs
- ☐ Ground Terminal TWTAs

- ☐ TWT Amplifiers
- ☐ Instrumentation Power Amplifiers
- ☐ Klystrons

In particular, model number(s) or power/frequency:

_____

_____

My application is: _____

_____

My schedule is: ☐ Immediate ☐ Future ( ) mos.

☐ Please have your local sales engineer contact me to discuss my application.

☐ Please send me an additional copy of your *Hughes TWT and TWTA Handbook.*

Name _____

Title _____

Company _____

Address _____

City _____

State _____ Zip Code _____

Phone _____

NO POSTAGE
NECESSARY
IF MAILED
IN THE
UNITED STATES

BUSINESS REPLY MAIL

FIRST CLASS PERMIT NO. 457 TORRANCE, CA

POSTAGE WILL BE PAID BY ADDRESSEE

HUGHES ELECTRON
DYNAMICS DIVISION
3100 W. Lomita Blvd.
Torrance, CA 90509

I am interested in the following products:

Radar and ECM TWTs
- ☐ Pulsed ☐ CW

Communications TWTs and TWTAs
- ☐ Space type CW TWTs
- ☐ Space type CW TWTAs
- ☐ Ground Terminal TWTs
- ☐ Ground Terminal TWTAs

- ☐ TWT Amplifiers
- ☐ Instrumentation Power Amplifiers
- ☐ Klystrons

In particular, model number(s) or power/frequency:

_____

_____

My application is: _____

_____

My schedule is: ☐ Immediate ☐ Future ( ) mos.

☐ Please have your local sales engineer contact me to discuss my application.

☐ Please send me an additional copy of your *Hughes TWT and TWTA Handbook.*

Name _____

Title _____

Company _____

Address _____

City _____

State _____ Zip Code _____

Phone _____

NO POSTAGE
NECESSARY
IF MAILED
IN THE
UNITED STATES

BUSINESS REPLY MAIL

FIRST CLASS PERMIT NO. 457 TORRANCE, CA

POSTAGE WILL BE PAID BY ADDRESSEE

HUGHES ELECTRON
DYNAMICS DIVISION
3100 W. Lomita Blvd.
Torrance, CA 90509

I am interested in the following products:

Radar and ECM TWTs
- ☐ Pulsed ☐ CW

Communications TWTs and TWTAs
- ☐ Space type CW TWTs
- ☐ Space type CW TWTAs
- ☐ Ground Terminal TWTs
- ☐ Ground Terminal TWTAs

- ☐ TWT Amplifiers
- ☐ Instrumentation Power Amplifiers
- ☐ Klystrons

In particular, model number(s) or power/frequency:

_____

_____

My application is: _____

_____

My schedule is: ☐ Immediate ☐ Future ( ) mos.

☐ Please have your local sales engineer contact me to discuss my application.

☐ Please send me an additional copy of your *Hughes TWT and TWTA Handbook.*

Name _____

Title _____

Company _____

Address _____

City _____

State _____ Zip Code _____

Phone _____

Radar Applications

Although a German scientist, C. Hulsmeyer, patented the first primitive radar as early as 1904, it wasn't until the mid-1930's that practical systems evolved. Early systems employed smooth-bore and, at a later date, cavity magnetrons. Today, a wide variety of microwave tubes are employed, including magnetrons, cross-field devices, klystrons, twystrons —and TWTs.

Increasing the range

As radar systems have evolved and grown more sophisticated, the need has developed for higher average power devices to detect targets at greater ranges —even in the presence of ECM interference. And because tracking capabilities have often been equally important, or duty cycles have had to be limited, peak-power requirements have also increased.

The coupled-cavity TWT has proven to be an ideal device for many high-power radar systems. Such tubes are used in mobile, naval and airborne radars. The coupled-cavity tube can provide peak powers in the order of hundreds of kW's at Kμ-band and megawatts at S-band. With solenoid focusing, average powers of as much as 10 to 20 kW's are achievable at Kμ-band and as much as 60 to 80 kW's at S-band.

Bandwidths of 10% are common for coupled-cavity tubes (bandwidths up to 30% are achievable, employing special designs). This bandwidth is sufficient for most systems employing frequency-hopping or frequency-scanning modulation techniques.

Pulse compression

Pulse compression systems require that the phase linearity of the transmitter be extremely good. Although good phase linearity can generally be achieved in helix TWTs, a coupled-cavity tube must be carefully designed to achieve flat phase performance. To accomplish this, Hughes employs a patented technique to introduce in-band loss. Deviations from phase linearity of only a few tenths of a degree in bandwidths of 40 to 50 megahertz have been achieved.

Phase linearity, if held to reasonable limits, will also enable the tube manufacturer to offer TWTs which closely track in phase between tubes. This is of primary importance when tubes are to be operated in parallel. Many systems are being configured using two to four tubes —both helix and coupled-cavity —in parallel. Hughes has an excellent understanding of the tube design constraints which must be employed to achieve good phase tracking in both types of tubes, and for this reason the company is in a position to work closely with the radar designer to achieve the system requirements.

For airborne radar applications, Hughes has employed a solenoid wrapped directly on the tube body. This technique minimizes the size and weight of the TWT, and also reduces the solenoid power. The technique, although first employed for airborne tubes, is now standard practice at Hughes for all new solenoid-focused TWTs.

Higher average power

In a system operating with a high pulse repetition frequency, the total average power can be limited by grid heating. Early TWTs were equipped with a single grid, and the intercepted current could cause the grid temperature to rise to the point at which the grid would start to emit or ultimately fail. Hughes Aircraft Company pioneered the use of the "shadow grid" (see Section 6) for applications requiring a high average power.

There are actually two grids in these tubes. The grid closest to the cathode is very carefully placed directly in front of the second or control grid and is held at cathode potential. Electrons are not attracted to this shadow grid, but its presence in front of the control grid reduces, by an order of magnitude, intercepted current on the control grid — allowing much higher average power to be controlled without excessive grid heating.

Shadow grids are employed in virtually all gridded tubes at Hughes. And even more effective techniques are currently in the development phase. The new techniques promise even further improved tube life and performance.

An Optimum design

TWTs have many peculiarities which must be understood to be certain that system performance will not be compromised. It is important, therefore, that the radar system designer work closely with the tube engineer so that the radar performance is optimized. Among the potential problems:

- Because the tube turns on in a nonlinear manner, some dc pulse compression occurs. This could create a range error.
- The RF saturation characteristics of a TWT are not the same across the frequency band of the tube. This could also create a range error.
- An inductance in the grid lead can result in a triode-type oscillation — which might take months to resolve.
- Long pulses can result in ion-oscillations. Extra tube processing could alleviate this effect.

Other problem areas could be listed. The important point, however, is that the Hughes technical staff, which has designed and built more TWTs for radar than any other group in the world, can help to anticipate difficulties *before* they occur, shortening the design cycle and increasing the chances for ultimate success.

Electronic Countermeasures

Electronic warfare has been defined as a military action to take advantage of the enemy's use of the electromagnetic spectrum or deny its use to him. It is usually categorized into:

ESM (Electronic Support Measures) — Actions taken to search for, intercept, locate and identify enemy emitters.

ECM (Electronic Counter Measures) — Deliberate jamming or deception of an enemy emitter or receiver.

ECCM (Electronic Counter Counter Measures) — Action to ensure effective use of our equipment despite enemy jamming.

The earliest use of RF jamming was in World War I by the German Navy. However, these primitive tactics were not really developed until the military began using radar just prior to World War II.

The development of radar was rapidly followed by the introduction of ECM techniques to deceive and jam them. In turn, the evolution of new radars has been partially the result of a continual need to stay ahead of any new countermeasure tactics which might compromise the radar's effectiveness.

The trend in search radar, for example, has historically been toward much higher powers and techniques that will increase target visibility even while being jammed. A good anti-jamming radar necessarily must be able to shift frequency over a wide bandwidth quickly to avoid the jammer's source frequency.

ECM trends have also been toward wide bandwidth system capabilities. The jammer on the target may be designed to amplify wideband noise, or to deceptively retransmit the hostile radar pulse to offset the radar's ability to determine the target's position.

Because wide frequency bandwidths are essential to the employment of such ECM tactics, an amplifying device capable of broad operating ranges with sufficient output power and efficiency has been needed.

The TWT has proven to be ideally suited for this task. Unfortunately, however, ECM is usually not designed as an integral part of the airframe, but rather adapted internally or mounted in pods externally,

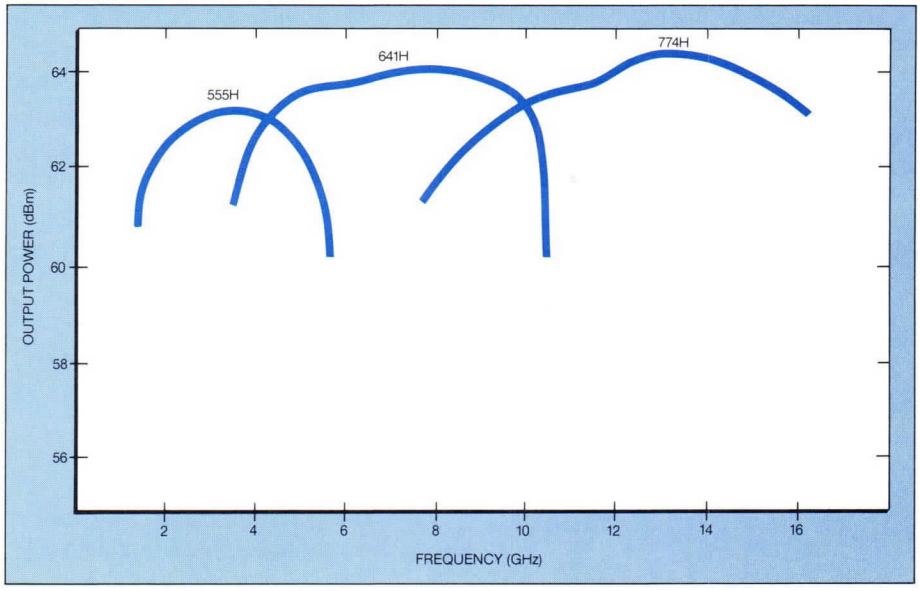

Figure 42 — *The 2 to 18 GHz ECM band is covered with several pulsed helix TWT tubes using single gridded electron guns, PPM focusing and coaxial couplers.*

depending on the military service tactics. As a consequence, TWTs are not standardized with respect to interface parameters and require close liaison between the TWT supplier and the ECM system engineer.

Pulsed TWTs

Hughes Electron Dynamics Division has been a leading supplier of broadband, kilowatt-level, helix TWTs for many ECM systems. Proven production capability has been established with tubes in all the major frequency bands.

Currently, pulsed kilowatt TWTs cover the ECM spectrum up to 18 GHz. Figure 42 shows summary RF output data for typical octave-bandwidth pulsed helix tubes which have been used in conventional ECM systems. The tubes feature a rugged metal-ceramic construction suitable for airborne or missile environments, and typically use a single-gridded electron gun, PPM-focusing and coaxial couplers.

Hughes broadband helix TWTs have proven to be reliable building blocks for many ECM applications. Some typical examples of helix TWTs can be seen in Figures 43 and 44.

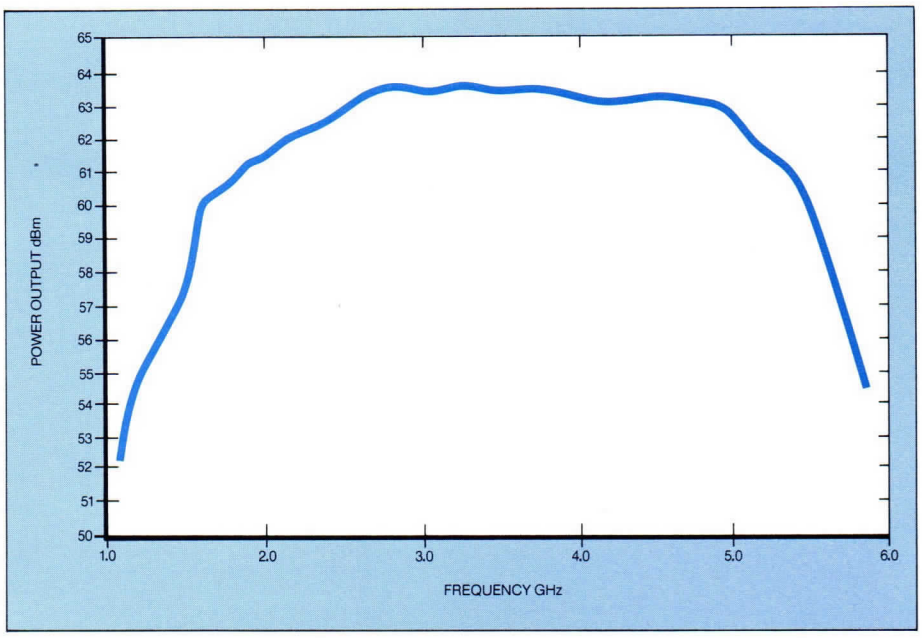

Figure 43 — *Wideband performance fundamental output power vs. frequency.*

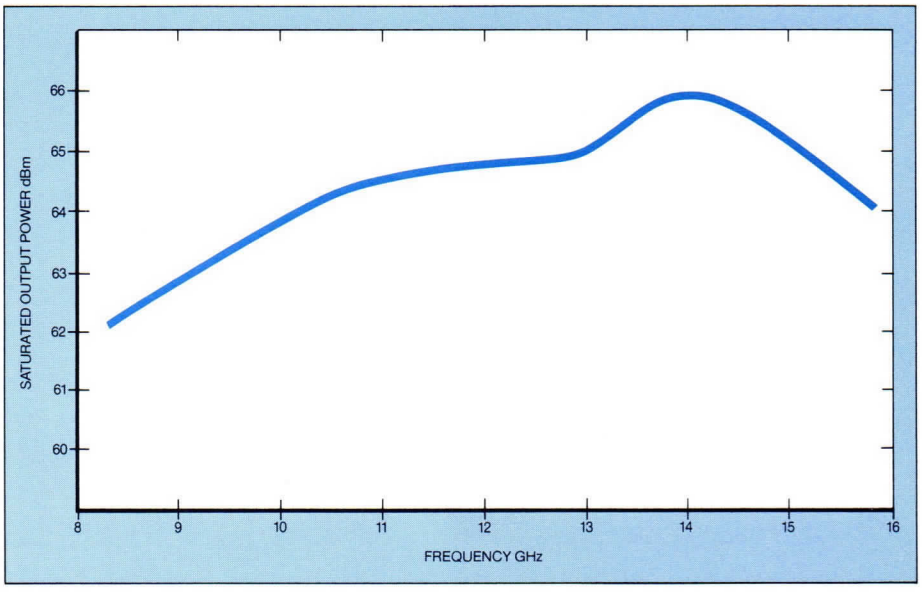

Figure 44 — *774H saturated output power.*

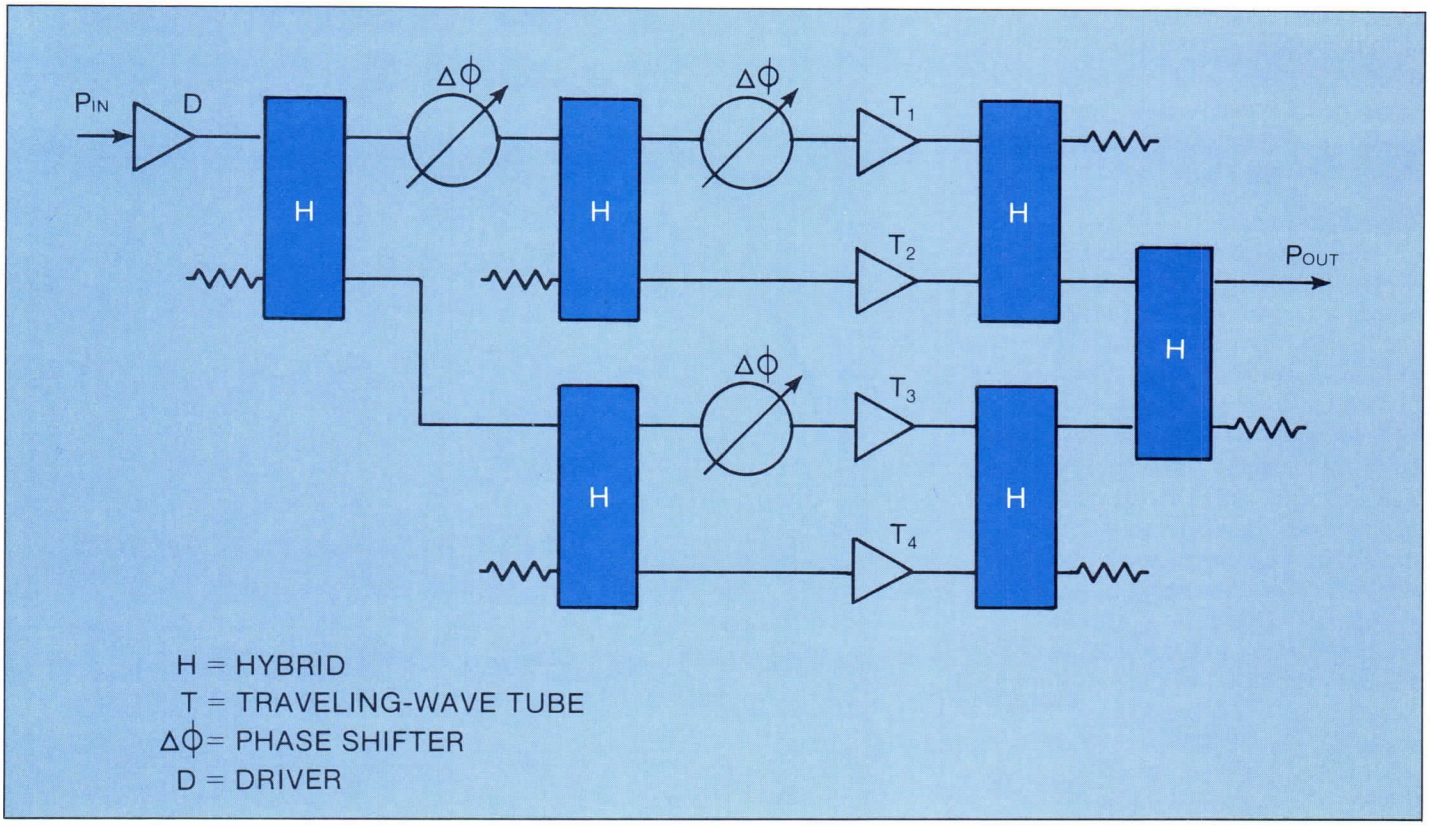

Figure 45 — *When combining several kilowatt-pulsed TWTs to attain higher output, accurate phase tracking is critical.*

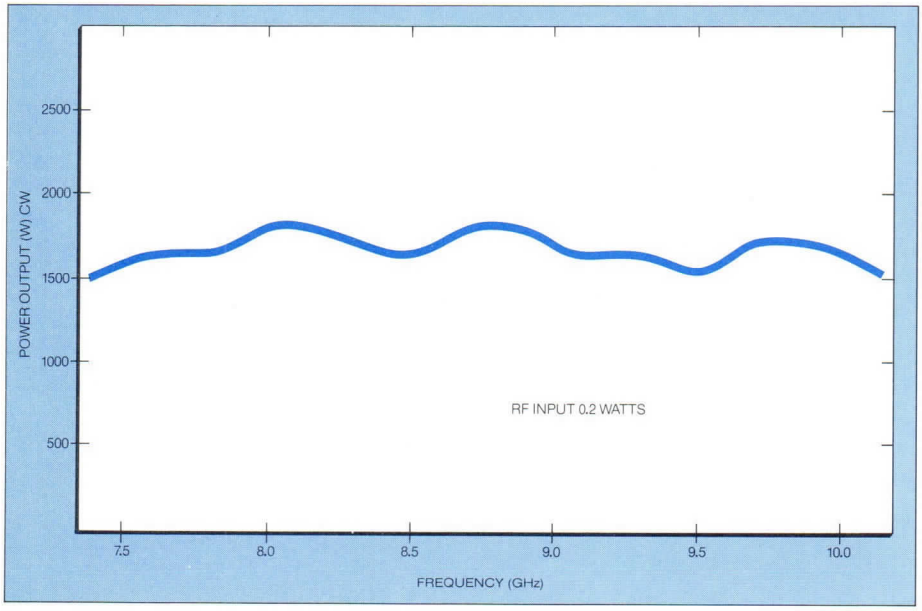

Figure 46 — *Power output with constant drive.*

Parallel pulsed TWTs

Figure 45 is a schematic of a technique to combine several conventional one kilowatt pulsed TWTs to attain higher pulsed power output over a broad bandwidth.

In such a combiner system, accurate phase tracking for all components over the frequency range is a critical requirement for satisfactory performance. The input dividers are 3 dB hybrids while the output combiners (hybrid or "magic T") have to be capable of handling higher peak and average power levels over large bandwidths.

Phase compensation is required for each tube pair to ensure the correct phase relationship in each combiner. Each of the tubes also requires an amplitude and phase equalizer so phase tracking can

be kept within +20° over an octave bandwidth, provided that their grid and cathode voltages are also individually optimized.

With all these provisions, the combiner losses are still in the order of 1.5 dB over the band. Four tubes at the 2.5 kW level would, therefore, provide a combined peak output power of 7.0 kW.

In some applications, coupled-cavity TWTs are needed to provide the RF performance and several Hughes types have been utilized. One example is rated at 10 kilowatts peak, 2% duty over the band 7.5-10 GHz, and another provides over 1500 watts CW over the same bandwidth, as shown in Figure 46.

Continuous-wave TWTs

In addition to these pulsed types, high-power CW TWTs are used in broadband airborne jammer applications (see Figure 47). An integral solenoid provides a compact, rugged device for tactical environments.

Currently, development work is underway at Hughes on 200-watt CW tubes in the 2 to 18 GHz bands for ECM and ground terminal applications. Figure 48 and 49 illustrate typical performance characteristics of these devices.

A shift to CW radar

Recent changes in airborne tactics have shifted interest to the advantages of CW radar over the earlier pulsed techniques. Pulsed radars transmit short bursts of energy and then turn on the receiver between bursts. CW radar, however, uses antenna isolation and frequency resolution to detect the return signal.

The countermeasures to these radars are:

a) Deception jamming which uses transmitted signals so as to confuse the radar's data processing system.

b) Noise jamming which uses high-power density RF to obscure the radar return.

Each approach has strong advantages in varied tactical situations, but they are most effective when used together.

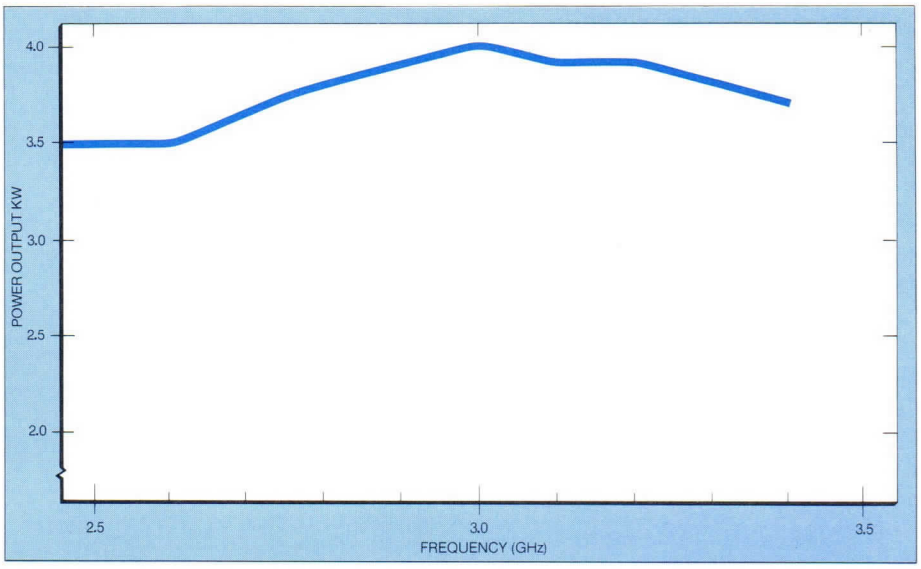

Figure 47 — *Output power with constant RF drive.*

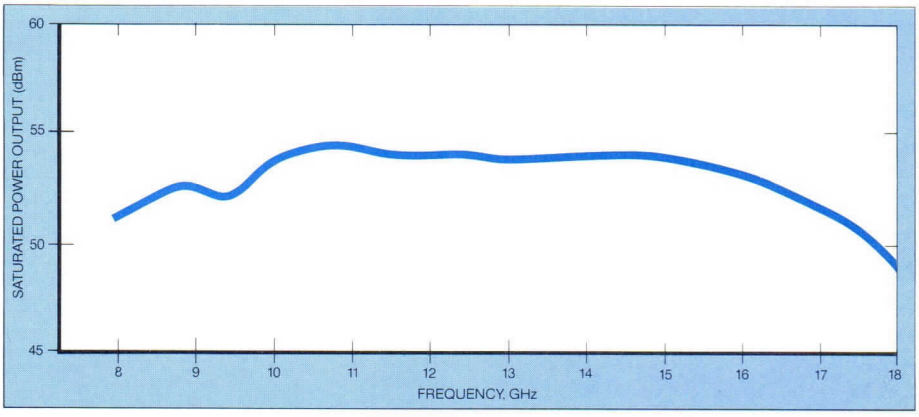

Figure 48 — *CW saturated power output.*

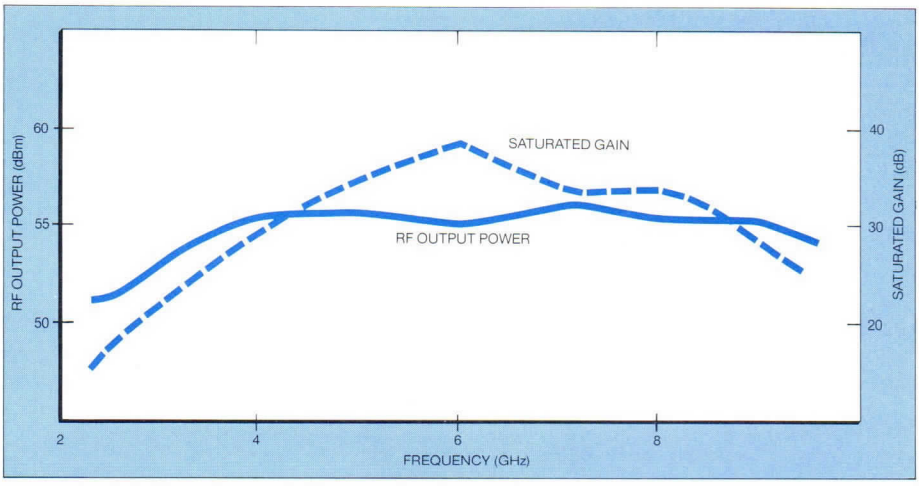

Figure 49 — *Saturated CW gain/power vs. frequency.*

One way to achieve this objective, shown in Figure 50, is to use two TWTs, operating in parallel from a single power supply. One is a pulsed TWT for deceptive schemes; the other, a high power CW TWT used for barrage jamming modes.

This approach is based on the available single-mode TWTs previously described, and recent improvements have been made in both pulsed and CW single-mode TWTs in regard to higher power output, extended bandwidth and improved duty cycle. For example, a recently developed I-J band-pulsed TWT, is rated at 8% duty cycle for performance as shown in Figure 51.

However, newer system concepts utilize a *single* multi-mode TWT to provide both the pulsed or CW output. This approach has obvious simplicity as well as inherent savings in size and weight.

Multi-mode TWTs

Key design features of these new multi-mode devices include a shadow gridded tetrode electron gun to provide the varied beam operating parameters. In addition, nondispersive circuit techniques are used to achieve wider bandwidths. Unique attenuators and velocity step tapering are also used to inhibit backward-wave oscillations and enhance tube stability. Integral barrel PPM-focusing provides excellent RF performance as well as a reliable rugged device which meets the stringent requirements of modern airborne environments.

Figure 52 shows typical performance for a multi-mode TWT. Flexibility in providing for intermediate modes allows the designer to adapt the system to a wide range of output power requirements. Specific applications for such multi-mode performance should be discussed with Hughes at the time of system design to benefit from the latest developments in this area.

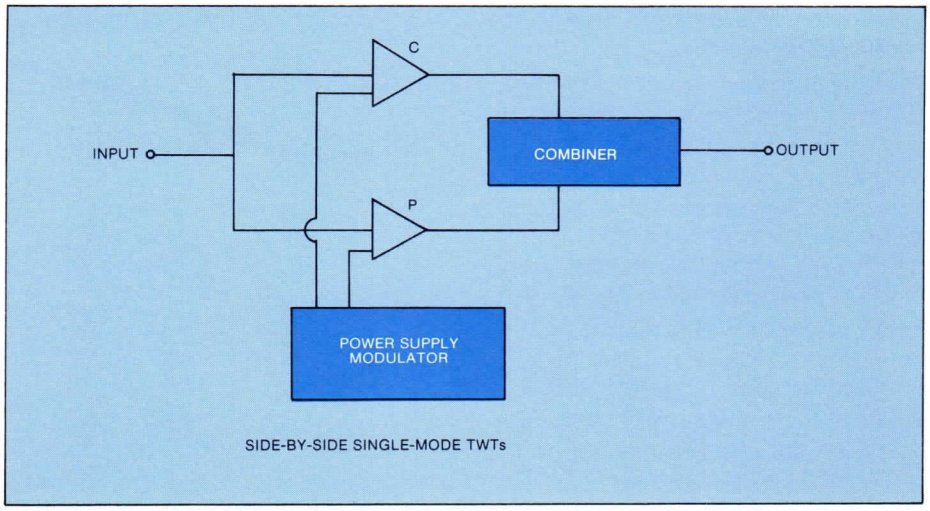

Figure 50 — *Two TWTs are operated in parallel from a single power supply, one pulsed TWT for deceptive schemes and the other as a high-power CW TWT for jamming.*

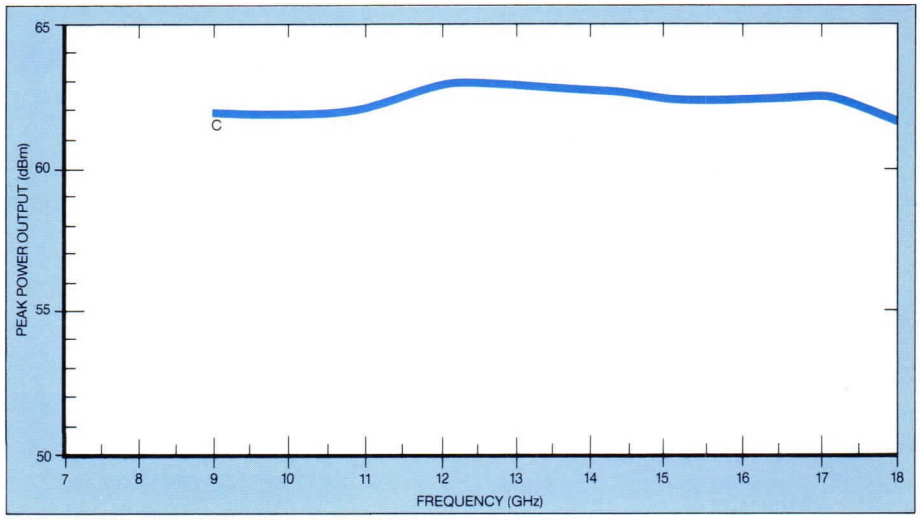

Figure 51 — *Power Output vs. Frequency at 8% duty factor.*

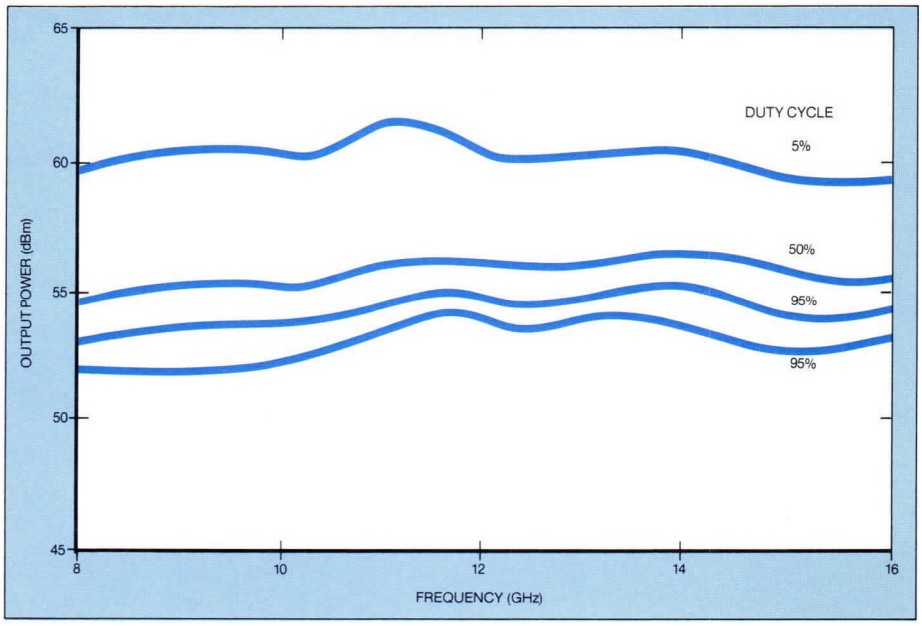

Figure 52 — *Multi-mode performance of a Hughes' multi-mode TWT offers the systems designer flexibility in output power requirements.*

The TWT in Space

Just how long can a TWT/TWTA be expected to perform in a space application? Life experience indicates that 10 years is a reasonable estimate for the life of Hughes space hardware.

Shown in Figure 53 are typical TWTAs for space communications. These highly sophisticated microwave amplifiers provide the necessary high gain required for downlink transmission. This high gain is attainable due to the combined high conversion efficiency of the TWT and the electronic power conditioner (EPC).

Hughes space experience began in 1963 with the launch of the Syncom Satellite series. These Hughes/NASA satellites were the first attempt at placing satellites in synchronous orbit. Syncom also contained the first of a continuing line of space TWTs, with an in-orbit operating time approaching 20,000,000 hours. This is in addition to the life test experience of nearly 5,000,000 hours. The in-orbit TWT experience has been accumulated on over 35 major space programs, including Apollo, Mariner, Surveyor, Pioneer, Intelsat series, Skylab, Westar, Marisat, TDRSS, DSCS-II and DSCS-III.

In the case of TWTAs, Hughes experience began in the mid-60's with the Lunar Orbiter program. Since that time, TWTAs have been developed and delivered for military, NASA, commercial and international space applications. The RF-power capabilities of such units range from 200 mW to 100 W of CW operation. Hughes has on-going programs to investigate higher efficiency, lower weight, smaller size, higher reliability, the interface problems between TWT and the EPC, and the interface between the TWTA and the spacecraft.

The space TWT

The design philosophy adopted for the TWT during the Syncom era provided hardware that was rugged, reliable, lightweight, and with a long service life. The same philosophy has carried over in the more recent programs to achieve the same desirable features for the EPC. While maintaining the original design philosophy, Hughes has developed and implemented the most up-to-date state-of-the-art technology in the areas of metal-ceramics processing and mechanical and electrical design techniques. This combination of philosophy and technology has produced hardware that has consistently proven itself to be fully space-qualified.

Keys to a long-life TWT

The life determining design feature of a TWTA is the cathode of the tube. Hughes, in the late 1950's, selected oxide cathodes as the source of thermionic electron emission for stable, long-life performance. In the years since, this has proven to have been an excellent selection, having been confirmed by life test as well as actual operation in the deep space environment.

To assure long life with an oxide cathode, the current emission density or loading of the cathode is usually kept below 250 Ma/cm^2.

There are three life-limiting mechanisms for an oxide-coated cathode: the

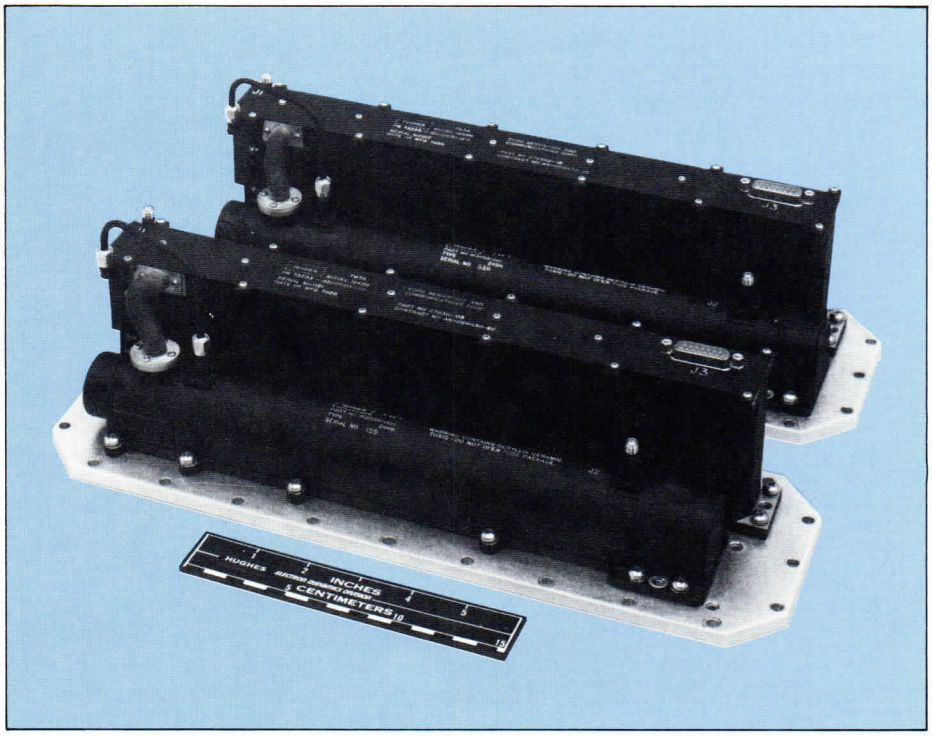

Figure 53 — *C-band 4.5 W and 8.5 W TWTAs.*

total coating depleted, the change of mixed oxide coating stoichiometry, and the activator arrival rate. All of these mechanisms change with operational time depending on temperatures, structural dimensions, initial concentrations of activators and coatings, and the vacuum environment within the TWT.

From accumulated life data, the temperature, minimum activator arrival rate, allowed coating depletion, and the limited oxide mix stoichiometry are empirically determined. The dimensions, concentrations of activators and coatings, and the vacuum environment are controlled by well-proven processes and procedures.

Electron gun optics are selected for conservative space charge, limited emission density, and cathode temperature at a perveance, voltage, and beam size appropriate to the tube design.

In addition to the oxide cathodes used for space qualified TWTs, the so-called dispenser cathode is gaining some acceptance. The dispenser cathode lends itself to higher loading values permitting a lower area convergence in the design of electron beams for use at the higher frequencies. Thousands of hours of life testing have been completed and this testing continues to investigate and establish the dispenser cathode as a long-life element, at least equal to the well-proven oxide cathode.

Other factors which must be taken into account to insure long life are the heater which heats the cathode, the metal-ceramic seals which must maintain a near-perfect vacuum, and the focusing structure which must assure maximum beam transmission.

Cathode-knee temperature

An idealized curve of cathode current versus cathode temperature is shown in Figure 54. The region to the left of the knee is known as the temperature-limited-emission region. The region to the right, the area where tubes are normally operated, is the space-charge-limited-emission region. Typically, in long-life TWTs, some finite margin should exist between operating temperature and knee temperature.

Another characteristic of long-life TWTs is that the cathode-knee temperature is relatively low and is stable as a function of time after initial processing. A method for measuring this parameter, known as cathode activity test, is to monitor the cathode current as a function

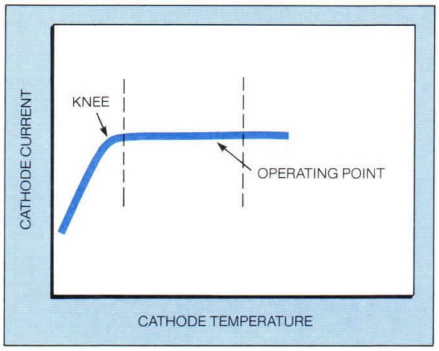

Figure 54 — *The region to the left of the knee is the temperature-limited-emission region, to the right is the space-charge-limited-emission region.*

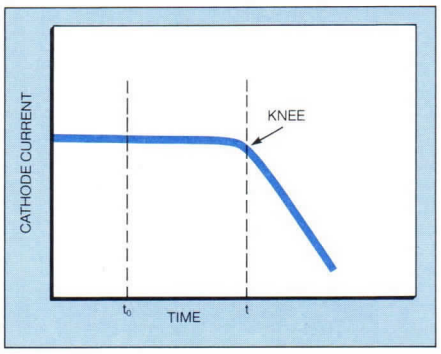

Figure 55 — *A cathode activity test is used to assure that the cathode-knee temperature is relatively low and stable after initial processing.*

of time after removal of heater voltage — while maintaining all other voltages applied to the tube.

The time-to-knee in Figure 55 is directly related to the knee temperature through the thermal properties of the overall cathode structure. This curve is taken periodically during the TWT and TWTA burn-in period to assess the quality of the cathode. The time-to-knee must be stable during final burn-in hours to assure a long-life device.

Long-life heaters

The heater, which is the hottest element in the TWT, must provide the necessary energy to maintain the correct cathode temperature. For this reason the selection of reliable high-temperature materials and the limiting of the maximum heater temperature through optimum thermal design are necessary factors in obtaining a reliable, long-life heater design.

It should also be noted that during turn-on and turn-off cycles, the heater must go through a change in mechanical dimensions. The design must provide for this expansion and contraction without over-stressing the heater wire or the heater coating which has been applied as an insulator.

The vacuum envelope

The required vacuum environment for the cathode can be degraded in several ways, all of which tend to increase the pressure and impair cathode operation. Among these are a leak in the vacuum envelope, internal outgassing due to overheating, or arcing with attendant poisoning and/or ion bombardment of the cathode.

The incidence of vacuum envelope leaks is kept extremely low by the use of good design, proven reliable metal-ceramic joining techniques, and very high quality materials.

Careful analysis, together with thorough thermal design and testing, leads to conservatively low operating temperatures within the TWT. Under these circumstances, the TWT bakeout temperature is never approached (except at the cathode) in normal specified tube operation. Hence, the cleaning and outgassing function of bakeout is not sacrificed. A heated getter provides internal pumping capacity over extended life.

Screening and storage tests are performed during the manufacturing cycle to eliminate any possible leaks.

Beam focusing

Space TWTs make exclusive use of PPM focusing. There are three types of material which are used: platinum-cobalt, Alnico-8, and more recently, samarium-cobalt. These materials have been chosen so that a maximum magnetic field may be achieved. During testing, the magnetic field may be altered slightly by placing small magnetic shunts on the outside diameter of the magnet stack.

Critical design parameters

The primary design parameters which differ according to the different applications are frequency, power level, gain, bandwidth and life. Secondary considerations which must be taken into account to achieve the best tradeoffs for a specific application are efficiency, linearity, size and weight.

TWT size is determined by the physical laws which determine the frequency response, linearity, and efficiency. The weight depends on the size, materials used, and the structural techniques employed for the necessary strength to survive the thermal stresses, pyrotechnic shock and vibrations encountered during launch and operations.

The space EPC

Hughes has developed and manufactured EPCs for TWTs capable of 200 mW to 100 W of CW RF power. These units are designed to supply cathode voltages from 1.2 to 5 kV and will operate from a regulated or unregulated bus. In addition, EPCs have been developed for pulsed applications with cathode voltages in excess of 10 kV.

The EPC converts the regulated or unregulated spacecraft bus voltage to dc voltages at the proper levels and with the necessary regulation to operate a given TWT. A simplified block diagram of a typical EPC is shown in Figure 56.

The heart of the EPC is a new approach to voltage conversion and regulation known as the "Venable Converter," patented by Hughes. The converter utilizes a circuit configuration that achieves such desirable features as higher efficiency, a single circuit for regulation and conversion, minimized output filter requirements, and simplified control system applications.

The size and weight of the EPC is dependent on the thermal interface, RFI and telemetry requirements, spacecraft power bus, allowable ripple current that the TWTA can inject on the power bus, residual AM and PM noise, and shock and vibration levels to be experienced in the launch environment.

Hughes has on-going programs exploring efficiency improvements, longer life and reliability, packaging techniques, the effects of radiation, multi-stage collector operation, and system interface as it relates to both thermal factors and the power bus of the spacecraft.

Future trends

The future trends being dictated by systems requirements are toward higher frequency, greater efficiency, increased reliability, longer life, smaller size, lighter weight and, in some cases, higher power.

The migration to higher frequency, from the standpoint of the TWT, will result in smaller and lighter weight devices. However, as the frequency increases, cathode voltages usually increase, causing the EPC to grow in both size and weight. This, in turn, will force the investigation, qualification, and in some instances, development of new materials and processes.

Future improvements in efficiency will be gradual as the TWT and EPC approach maturity. Efforts will be continuing in resynchronization and multi-stage collector techniques for TWT efficiency improvements, while new circuit techniques will be explored and new components evaluated for efficiency improvements in the EPC.

Higher reliability can be achieved by additional screening, testing and burn-in. This is usually a trade-off of time and cost. Longer life may be brought about by lower cathode loading, incorporating into future designs the experience gained through life testing and actual system usage, and a continuous program of cathode material improvement and evaluation.

The smaller size and lighter weight will come about by exploring and developing new materials, more efficient ways to package the EPC, improved techniques of heat removal, and working in close relationship with system engineering so that a given TWT/TWTA is designed for optimum performance in a package that meets the environmental and mechanical interface requirements.

Higher power TWTs/TWTAs have been developed and manufactured for other applications. Therefore, it will require the transfer of that technology to space-qualified hardware, while still maintaining and assuring the stringent requirements needed for such hardware.

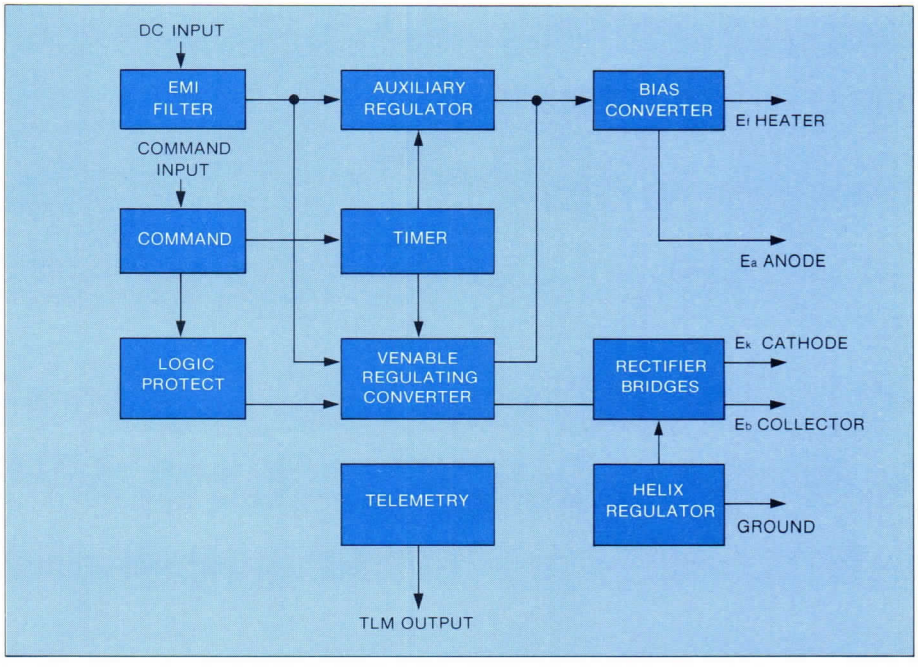

Figure 56 — *The heart of the EPC is the new approach to voltage conversion and regulation known as the "Venable Converter."*

Earth Terminal Communications

TWTs, TWTAs, and HPAs (high-power amplifiers) used in transmitter subsystems for satellite earth stations require special performance characteristics if they are to meet the demanding requirements of satellite up-links.

The stable and controllable devices must provide low distortion operation for applications such as video, single channel per carrier, TDMA, FDM, and other up-link carriers.

Each type of carrier or service places its own special requirement on RF performance in the areas of gain variation, group delay, AM/PM intermodulation distortions, and residual modulation.

In addition to RF performance, the communication power amplifier must offer high reliability to insure minimum down time and loss of traffic revenue. When an amplifier is down it must be supported by a combination of redundant back-ups, spares, documentation, factory support, and a low MTTR (Mean-Time-To-Repair).

Consideration must also be given to the amplifier's ability to interface properly with other operational and control subsystems in the earth station. Interfaces may be limited to RF and prime power in a small remote terminal, or they may include complete monitor, alarm, and control functions in a major earth station. Control of the HPA subsystem may be via a local control panel, or via satellite from a distant earth station.

From TWTs to complete subsystems

Hughes Electron Dynamics Division offers a wide range of low-, medium-, and high-power amplifiers and subsystems meeting the most demanding reliability, performance, and control requirements for satellite earth station transmitters.

The company's current products cover C-, X-, and Ku-bands, and range from a basic TWT and power supply configuration to a complex sub-system offering redundancy and RF power combining. Current development programs within Hughes will provide a basis for future HPA products in the 30-GHz-and-above up-link bands.

Figure 57 shows the basic functional blocks of a power amplifier incorporated into a redundant subsystem. Hughes amplifiers and subsystems use helix and coupled-cavity TWTs, together with solid-state power supplies and high quality microwave components. Reliability and maintainability are the keys to success. Data sheets showing operating characteristics are available for each of the HPA products offered.

Low-power amplifiers

The Hughes 9000H series of low-power amplifiers is configured for use as intermediate amplifiers in large satellite earth terminals and as output amplifiers in small or remote terminals. Figure 58 shows a Model 9040H02 power amplifier currently being used in a large number of remotely located, unattended bush-type terminals.

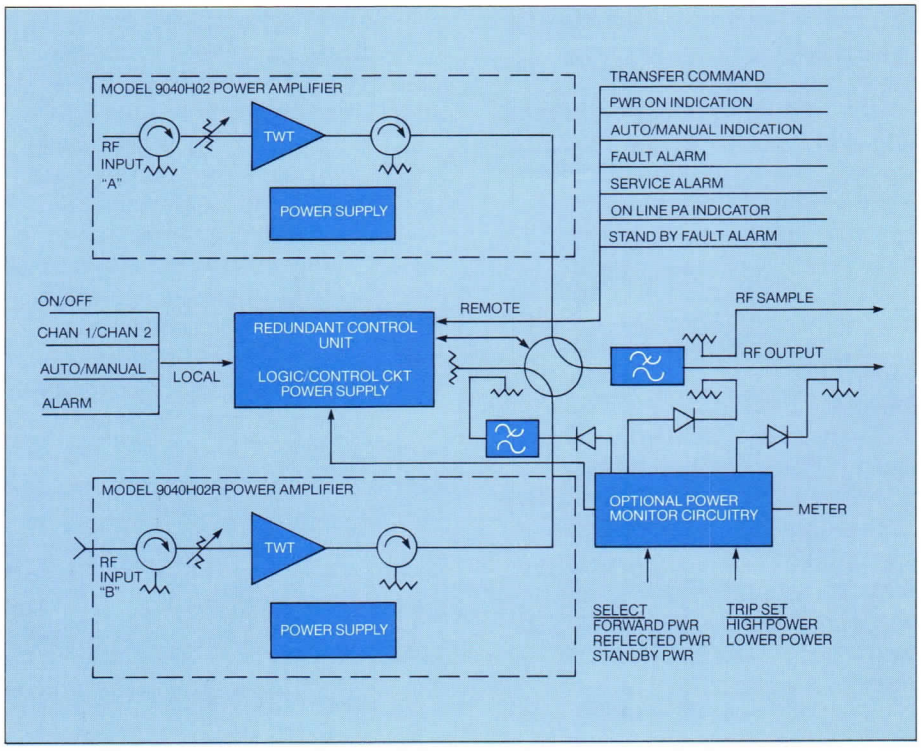

Figure 57 — *A typical redundant HPA subsystem block diagram shows automatic and remote control features and configuration.*

Each unit is completely self-contained and consists of a PPM-focused TWT, solid-state power supply, integral cooling and protective circuitry. Optional RF features include a solid-state driver for increased gain, output isolator for TWT protection, band-pass filter, input isolator, and input adjustable attenuator. The series uses any of several rugged metal-ceramic TWTs derived from Hughes' space-qualified devices to provide 10 to 50 watts of RF power output in the 6, 8, and 14 GHz satellite up-link bands.

The solid-state power supply offers optimum interface with the TWT for proven reliability and tube protection. Power consumption is held to a minimum. Protective features include excess helix current overload, thermal overload and automatic time delay for tube warm-up. Other available features associated with the power supply are high-voltage interlocks, operation from 115 Vac, 230 Vac, 48 Vdc or 24 Vdc input power, remote controls/status indicators for remote operation, and redundant power amplifier operation.

The compact, lightweight series 9000H units are particularly suited for transportation to remote sites. They can be mounted in a 19-inch rack with a panel height of 3½ inches and a maximum depth of 20 inches, and are available in a basic configuration (including a power supply, TWT, and control/protection circuitry) or as a complete power amplifier including optional features. In addition, an expanded subsystem, shown in Figure 59, is availble for redundant operation of any two amplifiers in the 9000H series.

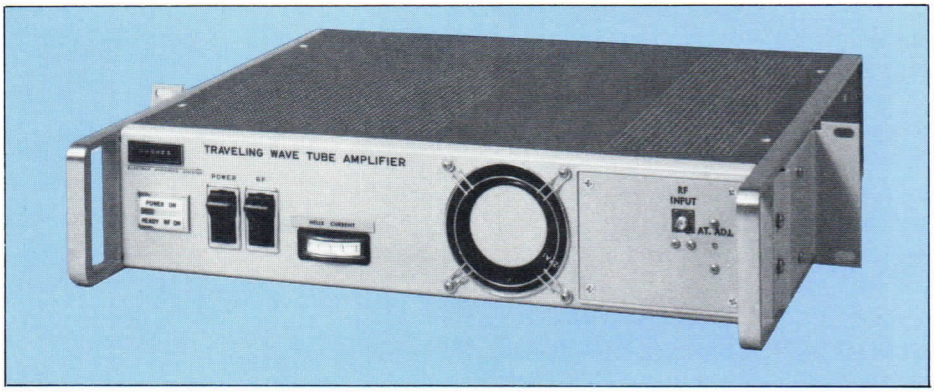

Figure 58 — *The compact Model 9040H02 amplifier is the workhorse of small bush-type earth terminals. It offers 40 watts at 6 GHz and a MTBF greater than 50,000 hours based on actual field experience.*

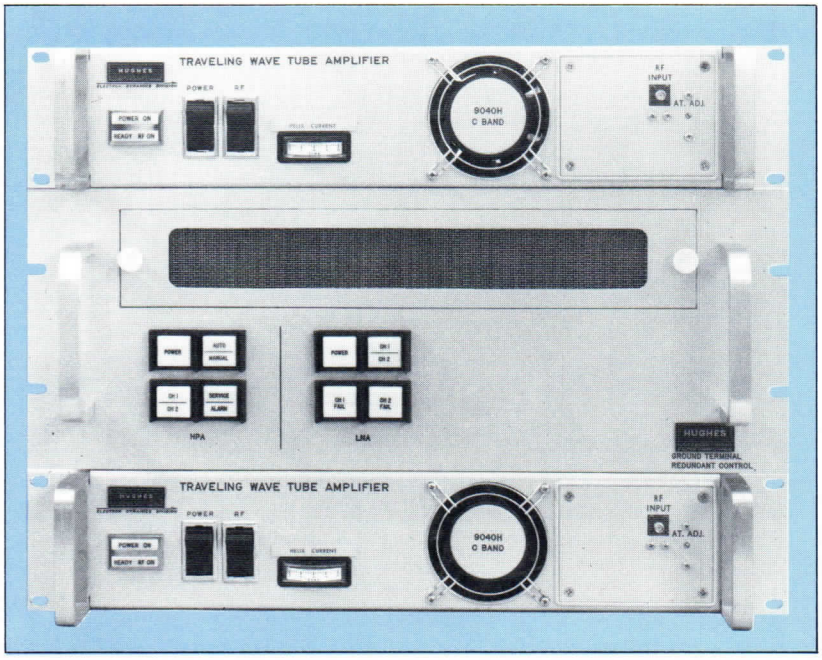

Figure 59 — *Two low-power amplifiers combined with a redundant control unit provide 40 watts at 6 GHz in the Model 9640H02 redundant subsystems.*

Figure 60 — *Hughes 9200H series of high-power amplifiers.*

High-power amplifiers

The Hughes 9200H series offers higher output power than the 9000H series along with a larger number of control interfaces and self-protect features. Figure 60 shows a typical HPA. The unit provides 400 watts at 6 GHz or 250 watts at 14 GHz, using the same power supply and package design. As seen in Figure 61, the high-power amplifier provides, as required, a high degree of control and protection. The series uses air-cooled and either PPM-focused helix or coupled-cavity TWTs.

The 9200H series is available as single HPAs or in redundant or power combined subsystems as shown in Figures 62 and 63. Subsystems include the logic and RF switches required for automatic and manual selection of the on-line amplifier(s). Completely integrated subsystems provide local or remote control and interfaces, making them ready to "drop-in" into almost ay type of satellite earth station.

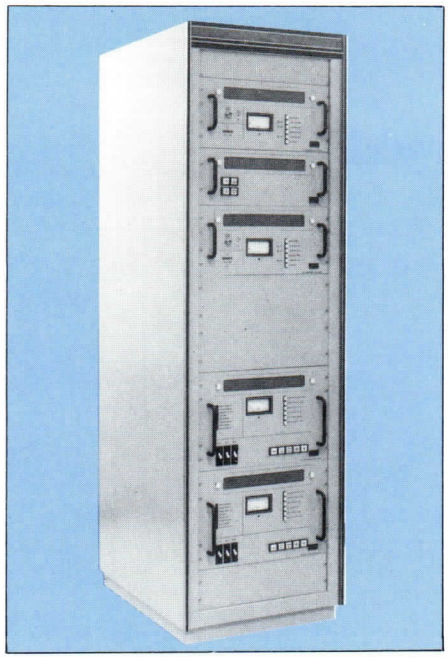

Figure 62 — *The Model 9740H02 redundant HPA subsystem includes two (2) high-power amplifiers and a redundant control unit in an integrated cabinet. 350 watts at 6 GHz is automatically provided from the on-line unit or the standby unit in the event of a fault.*

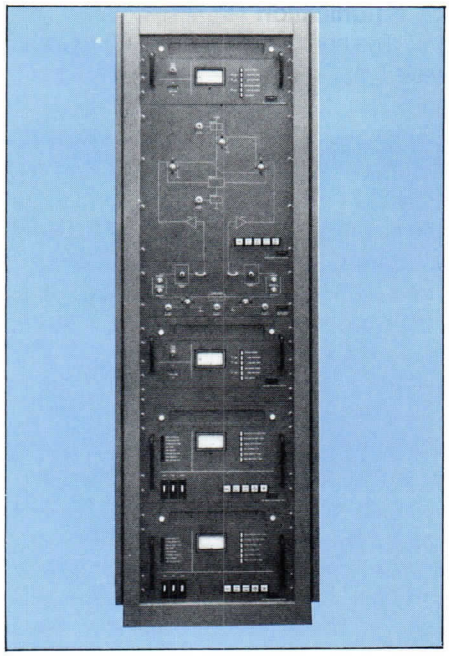

Figure 63 — *High-power amplifier subsystem features redundant or power combined operations in manual or automatic modes to provide 350 or 700 watts at 6 GHz. Input (upconverter) switching and mimic panels are also featured.*

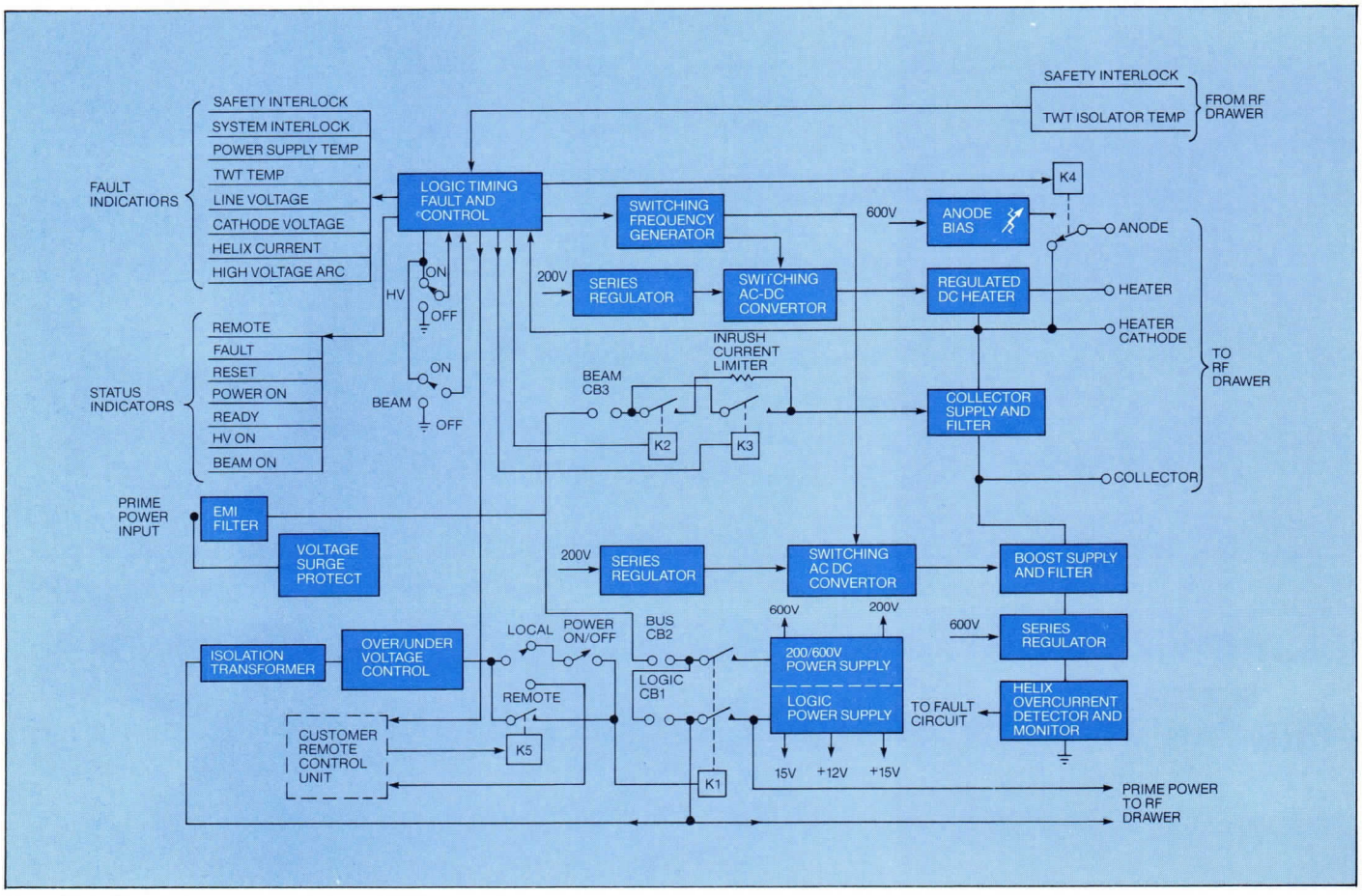

Figure 61 — *Electronic power conditioner (EPC) simplified block diagram.*

Communication TWTs

The heart of any HPA is the microwave tube. The Hughes HPAs employ helix or coupled-cavity TWTs designed to meet the low distortion requirements of satellite earth station transmitters.

The type of TWT used will depend on the application and power frequency tradeoffs. For example, a helix TWT at 14 GHz can be used to provide 250 to 300 watts of RF power while meeting life and reliability requirements. Above this power level, conservative design requires the use of a higher power, coupled-cavity TWT.

Two helix-type TWTs are shown in Figure 64. Both the Model 662H and Model 881H are metal-ceramic tubes requiring forced air cooling. Electronic requirements for both tubes are nearly identical and can be operated from power supplies of the same design.

Figure 65 shows the typical flat gain-versus-frequency response of Hughes communication TWTs.

The TWTs offer a low-profile package with heat deflectors for horizontal or vertical air flow (input and output). A threaded insert is provided at the tube collector for a thermal sensor.

Hughes also offers a number of communication TWTs of the coupled-cavity type. A typical TWT used in the Model 9260H04 HPA is shown in Figure 66.

Minimized gain and phase variations

Typical of these TWTs is the Model 792H which was developed for use as the final power amplifier in the FSC-78 military satellite communications ground stations. It operates over the 7.90 to 8.40 GHz frequency range, producing up to 5 kW of RF output power. For such communication systems, low distortion is required at all output power levels since the overall system performance is, in large part, determined by the output TWTs performance. Extremely low amplitude and phase ripple is achieved by means of special tube construction techniques and an integral gain equalizer.

Other tubes designed for these applications include the 8760H which provides up to 1.2 kW of CW power in the 7.9 to 8.4 GHz band and the 876H providing 600 to 700 W of CW power at 14.0 to 14.5 GHz. Both tubes are PPM-focused and air cooled. In the area of higher power tubes, the 870H provides 5 kW of CW power in the 14.0 to 14.5 GHz band and the 8723H provides 14 kW in the 7.9 to 8.4 GHz band.

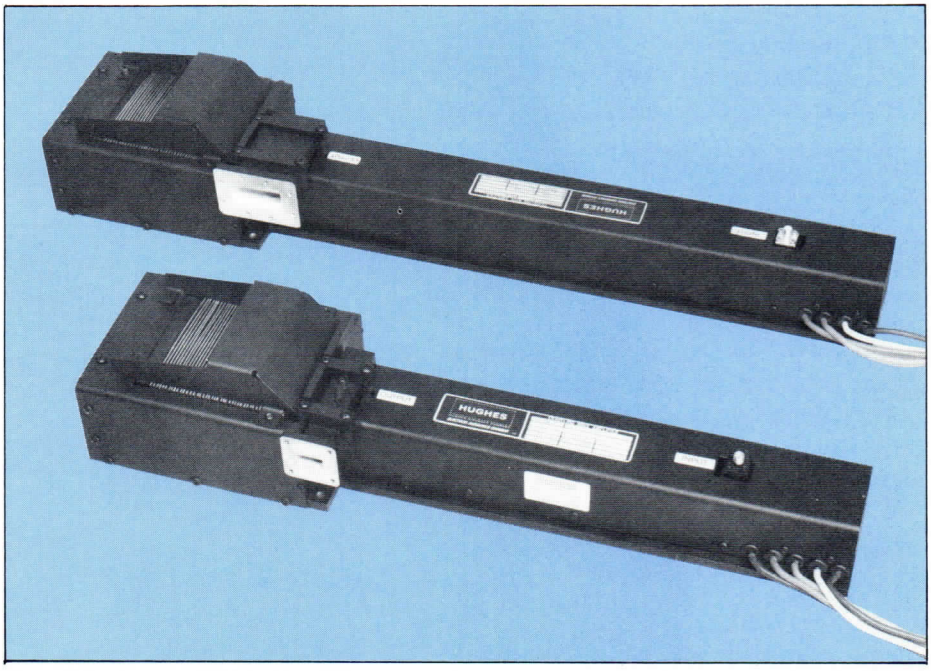

Figure 64 — *Models 662H & 881H 250 and 400 watt helix traveling-wave tubes used in commercial earth terminals at 6 and 14 GHz. Both are PPM-focused, air-cooled, and compatible with a single power supply design.*

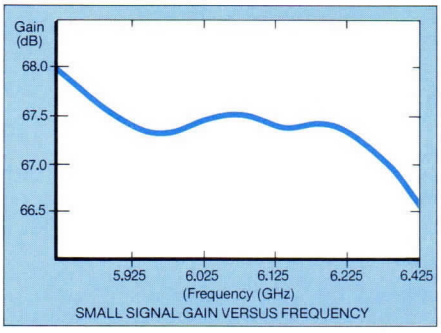

Figure 65 — *Typical small signal gain vs. frequency for Model 662H TWT 400 watts — 6 GHz.*

Both tubes are solenoid-focused and liquid-cooled.

Special emphasis on minimizing gain and phase variations is given in the design of the circuits for these tubes. Gain and phase variations result from feedback caused by mismatches in the circuit sections. The principal mismatches occur at the ends of the sections; i.e., the internal terminations and the input and output RF waveguide couplers. The larger the mismatches at these points and the higher the gain in each circuit section, the greater the gain and phase variations.

The internal terminations normally used in coupled-cavity circuits are of relatively short electrical length, being confined to a single cavity. As a result, the mismatch of these terminations can be reduced to a low but imperfect level.

Hughes has developed and patented a tapered internal termination for coupled-cavity circuits that extends over several cavities. The long electrical length of this termination and the gradually tapering loss pattern results in a very low mismatch. This technique also introduces in-band loss to the section, further reducing the feedback effect.

The tapered loss is achieved by using small cavities adjacent to the circuit cavity. These cavities are loaded with lossy ceramic "buttons" that protrude significantly into the cavity. The protrusion, or re-entrancy of a button determines the amount of in-band loss; the amount of loss is easily tapered in successive cavities by simply changing the amount of button re-entrancy, as illustrated in Figure 67.

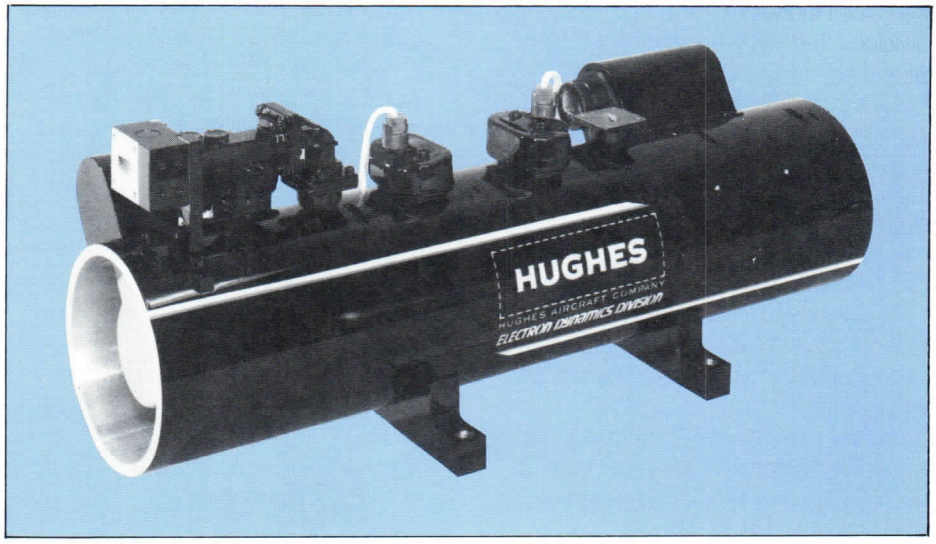

Figure 66 — *Hughes Model 876H coupled-cavity communications TWT provides over 700 watts at 14.0-14.5 GHz.*

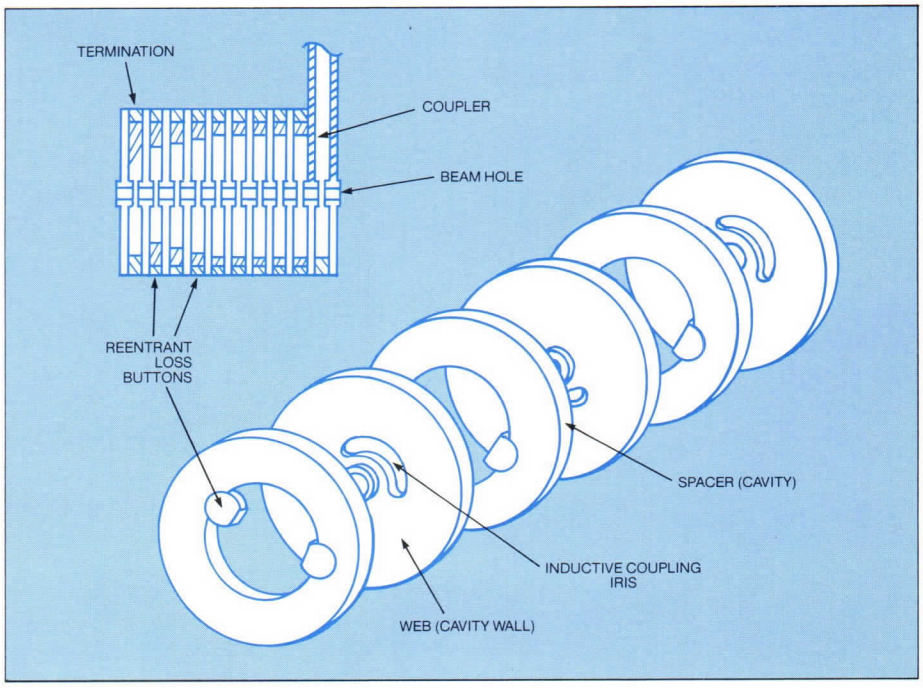

Figure 67 — *In the Hughes patented coupled-cavity slow-wave circuit, lossy ceramic buttons are used to produce a gradually tapering loss pattern to reduce mismatch between internal terminations and the input and output RF waveguide couplers.*

Instrumentation TWTAs

The Hughes Electron Dynamics Division offers a broad line of instrumentation-type TWTAs. The units cover the frequency range of 1 to 18 GHz, with a power output of 10 or 20 watts, in all standard frequency bands, multi-bands, and extended frequency bands. In addition, 1-watt units are offered in the 18 to 40 GHz range.

The Hughes Instrumentation Power Amplifiers are widely used in ECM, missile and radar checkout equipment, TV links, test equipment, radar ranges, satellite simulation, communication links, driver units, medical research and many other applications that require amplification of an RF signal.

Long-service life

Off-shoots of the long-life, highly reliable TWTs developed by Hughes for space applications, and provided with completely solid-state power supplies, the Instrumentation Power Amplifiers warranted for one full year — regardless of the operating hours.

The amplifiers are packaged in a lightweight, small-size enclosure (Figure 68) which includes a self-contained cooling system, automatic time delay, helix current overload, thermal overload and RF output connector interlock. The power supply provides a dc heater voltage and a highly regulated helix voltage to assure a high degree of gain stability.

The units are offered with a wide range of options so that they may be used in a variety of applications, and may be readily adapted to a specific requirement without major modifications.

Off-the-shelf delivery

Hughes has built the Instrumentation Power Amplifier on a production basis since 1969, and can supply most bands and power levels on an "off-the-shelf" basis. The units are also offered on the Government's General Services Administration (GSA) Authorized Federal Supply Schedule. All units are shipped with an Operation and Maintenance Manual which includes schematic and parts list. Hughes also maintains spare parts and the necessary facilities to service and calibrate the units in a timely manner.

Figure 68 — *Instrumentation TWTA.*

Looking Ahead

The TWT is now a mature device, being developed and manufactured by a mature industry, geared to the hard economics of the marketplace. There is, therefore, no reason to look forward to dramatic breakthroughs in the major characteristics of the TWT device.

There *will be*, however, a steady and significant improvement in its reliability, adaptability, and cost. Moreover, it would only be fair to state that the ultimate capabilities of the TWT in terms of bandwidth, power output, efficiency, size, and signal fidelity have not yet been fully exploited by present-day systems. Only in a few select areas, such as communication satellites, have TWTs been employed to the maximum of their intrinsic capabilities.

This situation will undoubtedly change as the systems of the future are pushed toward better performance — without corresponding increases in size or complexity. Even though new classes of TWTs are not likely to appear in the foreseeable future, the current effort to improve efficiency and power-handling capability will cause a measure of excitement in the industry. The mix of devices will also change, as advanced systems replace some of the more obsolete equipment. Those who are in the TWT manufacturing industry cannot expect to maintain their current level of business unless they pursue a vigorous development program to upgrade their devices. In spite of phased arrays, for example, the TWT will remain a rather sophisticated custom-built device, with most of the output of the industry going into complex military systems.

At the lower power levels, there will be ever increasing competition from solid-state devices. And with the introduction of rare-earth magnetic materials, such as samarium-cobalt, PPM focusing will take over a major part of the low-to-modest power levels, with solenoid focusing employed only in those cases where it is mandatory, such as a 10-kW CW X-band transmitter TWT.

More emphasis will be given to making TWTs more adaptable to the modern airborne environment, which requires compactness and high operating temperatures. Heat pipes with vapor-phase cooling will become increasingly important as a highly efficient method for transferring large amounts of heat in a very confined space.

Life and reliability will also be given a great deal more attention in the future. Today, the TWT is less than adequate in these two categoris, but not because of fundamental limitations. Like any other parameter, reliability costs money and development time. The more reliability, the more the cost. However, in terms of total system cost and life-cycle cost, the net savings may be quite dramatic. The real advances in this area will come as a result of conservative and skillful designs, not as a consequence of legislation and specification writing.

A Spectrum of TWTs and TWTAs

Table A—PULSED RADAR and ECM TWTs

	Model Number	Frequency Range (GHz)	Power Output (kW)	Duty Cycle	Saturated Gain (dB)	Cathode Voltage Ek (kV)	Cathode Current Ik (A)	Dimensions L x W x H (Inches)
S-Band	555H	2.0-4.0	1.25	0.10	33	-7.8	1.8	17.5 x 2.5 dia
	658H	2.5-8.0	1.0	0.10	30	-10.0	2.5	19.0 x 3.63 x 2.56
	589H	2.7-3.1	125.0	0.025	50	-45.0	17.0	58.0 x 6.0 dia
	584H	2.8-3.0	300.0	0.022	21	-57.0	28.0	41.0 x 6.0 dia
	588H	2.9-3.2	125.0	0.08	50	-45.0	17.0	57.0 x 6.0 dia
	587H	2.9-3.1	125.0	0.05	50	-45.0	17.0	56.0 x 6.0 dia
	▲560H	3.1-3.3	250.0	0.02	53	-53.0	21.0	54.0 x 6.0 dia
	8503H	3.1-3.5	120.0	0.08	50	-42.0	17.0	43.5 x 10.0 dia
	559H	3.1-3.5	125.0	0.08	50	-42.0	17.0	52.0 x 6.0 dia
	▲598H	3.1-3.6	250.0	0.10	50	-52.5	24.0	48.0 x 6.0 dia
	595H	3.4-3.7	220.0	0.03	21	-51.5	23.0	38.0 x 14.5 x 9.5
C-Band	639H	4.0-8.0	1.0	0.02	30	-10.0	2.5	14.5 x 2.75 dia
	641H	4.0-8.0	1.25	0.1	30	-9.75	1.8	14.5 x 2.75 dia
	▲580H	4.0-8.0*	1.0 p/0.1 CW	0.05	40-23	-9.5	1.2/0.300	20.0 x 4.0 x 3.2
	657H	5.3-5.7	65.0	0.04	47	-37.0	11.0	35.5 x 6.7 x 8.7
	621H	5.4-5.7	50.0	0.025	50	-35.0	8.0	29.0 x 3.3 x 7.5
	622H	5.4-5.8	75.0	0.025	50	-38.0	11.0	29.0 x 3.3 x 7.5
	635H	5.4-5.8	165.0	0.035	47	-48.5	17.0	34.5 x 12.0 dia
	676H	5.4-5.9	12.0	0.03	45	-23.0	4.0	27.0 x 8.75 x 8.0
X-Band	738H	7.5-10.0	10.0	0.01	40	-32.0	7.0	26.0 x 5.5 dia
	788H	7.5-10.0	10.0	0.02	40	-33.0	7.0	26.0 x 5.5 dia
	▲869H	8.0-16.0*	1.0 p/0.1 CW	0.05	40/20	-11.0	1.2/0.300	17.0 x 4.0 x 3.2
	774H	8.0-16.0	1.25	0.04	50	-11.0	2.1	14.0 x 2.5 x 2.0
	8722H	8.0-18.0	1.0	0.04	40	-11.5	2.1	16.0 x 2.5 x 2.0
	307H	8.6-9.5	50.0	0.01	50	-36.0	10.3	21.0 x 5.0 dia
	725H	8.5-9.6	1.58	0.04	40	-11.0	1.5	17.0 x 4.5 x 5.0
	8753H	8.5-9.6	150.0	.035	53	-50.0	17.0	31.0 x 7.5 dia
	308H	8.6-9.5	20.0	0.01	46	-24.0	6.0	19.0 x 4.0 dia
	8718H	8.6-9.4	35.0	0.012	52	-30.0	7.8	20.0 x 4.5 dia
	751H	8.8-9.7	50.0	0.01	52	-32.0	7.6	20.5 x 5.5 dia
	760H	8.9-9.9	40.0	0.01	42	-30.0	8.0	16.5 x 5.5 dia
	797H	9.0-9.8	9.0	0.5	54	-18.0	2.5	21.0 x 6.0 x 8.0
	750H	9.0-10.0	25.0	0.01	47	-24.0	5.5	18.5 x 5.0 dia
	8716H	9.0-9.2	120.0	0.0025	50	-43.0	13.5	24.0 x 5.0 dia
	796H	9.2-9.9	40.0	0.04	54	-32.0	7.0	20.5 x 5.5 dia
	▲8754H	9.0-18.0	1.5	0.08	45	-11.0	1.6	16.0 x 2.75 x 3.0
	8709H	9.2-9.4	26.0	0.012	47	-25.0	6.0	20.5 x 5.0 dia
	8715H	9.2-10.0	50.0	0.04	56	-32.5	8.0	24.0 x 5.5 dia
	8740H	9.3-9.9	50.0	0.02	50	-33.0	8.0	24.0 x 5.5 dia
	786H	9.3-9.9	50.0	0.07	47	-33.5	8.5	21.0 x 6.5 dia
	8708H	9.4-10.0	26.0	0.012	47	-26.0	6.0	21.0 x 5.0 dia
	719H	9.4-9.6	40.0	0.005	45	-26.0	6.8	15.0 x 3.8 dia
	781H	9.55-9.85	2.5	0.5	53	-12.0	1.2	16.0 x 6.0 x 7.5
	790H	9.6-9.8	1.0	0.20	50	-10.2	0.8	16.0 x 4.0 dia
	8725H	9.7-9.9	15.0	0.02	58	-23.0	4.0	18.0 x 3.3 dia
	8741H	10.0-10.3	4.0	0.20	33	-20.5	0.7	17.0 x 4.5 dia
	867H	11.0-17.0	5.0	0.02	40	-33.0	2.5	20.0 x 4.0 dia
Ku-Band	839H	15.0-16.5	100.0	0.005	50	-62.0	7.8	18.0 x 4.25 dia
	866H	15.7-17.7	10.0	0.5	33	-30.0	3.4	30.0 x 7.0 dia
	605H	16.0-16.5	100.0	0.005	40	-62.0	8.0	19.0 x 5.0 x 6.0
	854H	16.0-16.5	100.0	0.03	53	-65.0	8.1	20.0 x 6.0 dia
	838H	16.0-16.5	100.0	0.005	53	-63.0	7.7	16.0 x 4.0 dia
	835H	16.0-16.5	200.0	0.01	60	-85.0	13.0	27.0 x 6.0 dia
	820H	16.0-17.0	5.0	0.01	36	-24.0	1.5	14.0 x 3.5 dia
	830H	16.2-16.7	3.0	0.04	37	-22.0	1.3	16.0 x 4.5 dia
	861H	16.0-17.0	12.0	0.025	45	-30.0	2.0	14.0 x 4.0 dia
mm-wave	▲982H	93.0-95.0	0.1	0.5	50	-22.0	.088	18.0 x 4.0 dia

* = dual mode
▲ = under development

Dimensions L x W x H (cm)	Weight (lbs.)	Weight (kg)	Focusing	Modulation Control	Cooling	Model Number	
44.45 x 6.35 dia	10.0	4.55	PPM	G	L	555H	**S-Band**
48.26 x 9.22 x 6.5	8.0	3.64	PPM	G	C	658H	
147.32 x 15.24 dia	205.0	93.18	PPM	SG	L	589H	
104.14 x 15.24 dia	185.0	84.09	PPM	SG	L	584H	
144.78 x 15.24 dia	200.0	90.9	PPM	SG	L	588H	
142.24 x 15.24 dia	195.0	88.64	PPM	SG	L	587H	
137.16 x 15.24 dia	180.0	81.82	PPM	SG	L	▲560H	
110.49 x 25.40 dia	190.0	86.18	SOL	SG	L	8503H	
132.08 x 15.24 dia	170.0	77.27	PPM	SG	L	559H	
121.92 x 15.24 dia	200.0	90.9	Sol	SG	L	▲598H	
84.0 x 37.0 x 24.0	100.0	46.0	PPM	SG	L	595H	
36.83 x 6.99 dia	10.0	4.55	PPM	G	FA	639H	**C-Band**
36.83 x 6.99 dia	10.0	4.55	PPM	G	L	641H	
50.8 x 10.16 x 8.13	10.0	4.55	PPM	SG	C	▲580H	
90.17 x 17.02 x 22.1	58.0	26.36	PPM	SG	L	657H	
73.66 x 8.38 x 19.05	40.0	18.18	PPM	SG	L	621H	
73.66 x 8.38 x 19.05	40.0	18.18	PPM	CP	L	622H	
87.63 x 30.48 dia	200.0	90.9	Sol	SG	L	635H	
68.4 x 22.23 x 20.32	55.0	24.97	PPM	SG	FA	676H	
66.04 x 13.97 dia	35.0	15.91	PPM	SG	L	738H	**X-Band**
66.04 x 13.97 dia	35.0	15.91	PPM	SG	L	788H	
43.18 x 10.16 x 8.13	10.0	4.55	PPM	SG	C	▲869H	
35.56 x 6.35 x 5.08	5.0	2.27	PPM	G	C	774H	
40.64 x 6.35 x 5.08	5.0	2.27	PPM	G	C	8722H	
53.34 x 12.7 dia	30.0	13.64	PPM	A	L	307H	
43.18 x 11.43 x 12.7	25.0	11.36	PPM	A	FA	725H	
79.0 x 19.0 dia	65.0	29.5	Sol	SG	L	8753H	
48.26 x 10.16 dia	21.0	9.55	PPM	SG	FA	308H	
50.8 x 11.43 dia	26.0	11.82	PPM	SG	FA	8718H	
52.07 x 13.97 dia	25.0	11.36	PPM	SG	L	751H	
41.91 x 13.97 dia	22.0	10.0	PPM	CP	L	760H	
53.34 x 15.24 x 20.32	45.0	20.45	IS	SG	L	797H	
46.99 x 12.7 dia	26.0	11.82	PPM	CP	FA	750H	
60.96 x 12.7 dia	35.0	15.91	PPM	CP	FA	8716H	
52.07 x 13.97 dia	28.0	12.73	PPM	SG	L	796H	
43.0 x 7.0 x 7.6	5.0	2.7	PPM	G	C	▲8754H	
52.07 x 12.7 dia	26.0	11.82	PPM	SG	FA	8709H	
60.96 x 13.97 dia	32.0	14.55	PPM	SG	L	8715H	
60.96 x 13.97 dia	32.0	14.55	PPM	SG	L	8740H	
53.34 x 16.51 dia	45.0	20.45	IS	SG	L	786H	
53.34 x 12.7 dia	26.0	11.82	PPM	SG	FA	8708H	
38.1 x 9.65 dia	13.0	5.91	PPM	G	FA	719H	
40.64 x 15.24 x 19.05	37.0	16.82	IS	SG	L	781H	
40.64 x 10.16 dia	13.0	5.91	PPM	SG	FA	790H	
45.72 x 8.38 dia	10.0	4.55	PPM	SG	FA	8725H	
43.18 x 11.43 dia	17.0	7.73	PPM	SG	L	8741H	
50.8 x 10.16 dia	18.0	8.18	PPM	SG	L	867H	
45.72 x 10.8 dia	19.0	8.64	PPM	CP	L	839H	**Ku-Band**
76.2 x 17.78 dia	65.0	29.55	IS	A	L	866H	
48.26 x 12.7 x 15.24	20.0	9.09	PPM	CP	L	605H	
50.8 x 15.24 dia	45.0	20.45	IS	SG	L	854H	
40.64 x 10.0 dia	15.0	6.82	PPM	SG	L	838H	
68.58 x 15.24 dia	30.0	13.64	PPM	SG	L	835H	
35.56 x 8.89 dia	15.0	6.82	PPM	SG	L	820H	
40.64 x 11.43 dia	14.0	6.36	PPM	G	L	830H	
35.56 x 10.0 dia	12.0	5.45	PPM	SG	L	861H	
45.72 x 10.16 dia	12.0	5.45	PPM	AG	L	▲982H	**mm-wave**

Table B—CW RADAR and ECM TWTs

	Model Number	Frequency Range (GHz)	Power Output (kW)	Duty Cycle	Saturated Gain (dB)	Cathode Voltage Ek (kV)	Cathode Current Ik (A)	Dimensions L x W x H (Inches)
S-Band	551H	2.0-4.0	1.0	CW	30.0	-8.0	1.5	20.0 x 3.0 dia
	▲562H	2.0-4.0	1.0 p - 0.2 CW	0.05	30.0	-7.8	1.8-0.300	17.5 x 2.5 dia
C-Band	▲580H	4.0-8.0*	1.0 p - 0.1 CW	0.05	40.0-23.0	-9.5	1.2-0.300	20.0 x 4.0 x 3.2
	▲636H	4.4-5.0	10.0	CW	11.0	-15.0	2.0	36.0 x 12.0 dia
	▲8713H	7.5-10.2	1.0	CW	40.0	-9.8	1.2	24.0 x 6.0 dia
X-Band	▲869H	8.0-16.0*	1.0 p - 0.1 CW	0.05	40.0-20.0	-11.0	1.2-0.300	17.0 x 4.0 x 3.2
	▲8730H	9.0-18.0	0.2	CW	30.0	-9.5	0.3	17.0 x 3.0 x 2.8
	8731H	10.0-10.2	0.5	CW	40.0	-16.0	0.25	14.2 x 2.0 dia
Ku-Band	875H	13.6-14.0	5.0	CW	43.0	-18.5	1.5	2.0 x 6.0 dia
	▲832H	15.5-17.5	1.0	CW	30.0	-14.5	0.5	20.0 x 7.0 dia
mm-wave	▲819H	54.5-55.5	5.0	CW	20.0	-15.0	0.9	25.0 x 12.0 x 12.0
	920H	59.7-60.3	0.05	CW	35.0	-15.5	0.060	14.0 x 4.0 x 5.0

Table C—COMMUNICATION TWTs

	Model Number	Frequency Range (GHz)	Power Output (kW)	Duty Cycle	Saturated Gain (dB)	Cathode Voltage Ek (kV)	Cathode Current Ik (A)	Dimensions L x W x H (Inches)
C-Band	663H	5.2-5.8	3.0	CW	46.0	-13.5	1.8	27.0 x 8.0 x 8.0
	670HA	5.925-6.425	0.050	CW	45.0	-3.75	0.095	11.2 x 2.0 x 2.4
	677H	5.925-6.425	0.125	CW	45.0	-6.5	0.170	16.0 x 2.8 x 2.8
	662H	5.925-6.425	0.400	CW	40.0	-8.0	0.420	22.1 x 4.2 x 3.4
	614H	5.925-6.425	8.0	CW	40.0	-18.0	2.8	34.0 x 7.5 dia
	745H	7.9-8.4	1.2	CW	30.0	-9.9	0.09	18.0 x 6.0 dia
	751H/103	7.9-8.4	40.0	0.014	50.0	-32.0	7.5	22.0 x 5.5 dia
	767H	7.9-8.4	3.0	CW	35.0	-13.4	1.48	21.0 x 6.1 dia
	792H	7.9-8.4	5.0	CW	35.0	-13.4	2.05	21.0 x 6.1 dia
	▲8723H	7.9-8.4	14.0	CW	38.0	-22.0	2.7	27.0 x 6.8 dia
	▲784H	7.9-8.4	8.0	CW	36.0	-18.0	2.2	24.0 x 6.1 dia
	8760H	7.9-8.4	0.6-1.2	CW	40.0	-13.2	0.72	26.0 x 6.3 dia
X-Band	8736H	7.9-8.4	0.050	CW	45.0	-3.9	0.110	11.2 x 2.0 x 2.4
Ku-Band	870H	14.0-14.5	5.0	CW	35.0	-19.0	1.7	30.0 x 7.0 dia
	▲8730H	14.0-14.5	0.2	CW	30.0	-9.0	0.260	17.0 x 3.0 x 3.0
	848HA	14.0-14.5	0.020	CW	50.0	-4.0	0.070	9.3 x 2.0 x 2.3
	881H	14.0-14.5	0.250	CW	45.0	-8.6	0.3	21.6 x 5.2 x 2.5
	876H	14.0-14.5	0.700	CW	43.0	-16.0	0.4	21.6 x 4.8 x 6.2
mm-wave	914H	30.0-31.0	0.2	CW	35.0	-16.0	0.070	18.0 x 4.0 dia
	913H	36.0-38.0	0.1	CW	45.0	-16.0	0.070	18.0 x 4.0 dia
	915H	43.0-45.0	0.25	CW	50.0	-22.0	0.088	18.0 x 4.0 dia
	▲812H	49.5-58.0	0.15	CW	12.0	-20.0	0.12	15.0 x 4.0 x 10.0
	▲813H	54.5-55.5	1.0	CW	25.0	-25.0	0.4	18.0 x 10.0 x 12.0
	▲814H	91.0-96.0	0.10	CW	25.0	-15.0	0.17	18.0 x 9.0 x 10.0

Table D—COMMUNICATION POWER AMPLIFIERS

	Amplifier Model Number	Frequency Range (GHz)	Power Output (W)	Saturated Gain (dB)▲▲	Input Voltage (Vac.ϕ)	Dimensions W x H x D (Inches)
C-Band	9210H02▲	5.925-6.425	100.0	60.0	120/240 VAC; -48 VDC	19.0 x 5.25 x 20.0
	9040H02	5.925-6.425	40.0	44.0	120/240 VAC; -24/48 VDC	19 x 3.5 x 15.6
	9640H02	5.925-6.425	40.0	44.0	120/240 VAC; -24/48 VDC	19.0 x 14.0 x 25.0
	9240H02	5.925-6.425	350.0	70.0	120/230 VAC; 50/60 Hz 1 ϕ	19.0 x 21.0 x 24.0
	9740H02	5.925-6.425	350.0	70.0	120/230 VAC; 50/60 Hz 1 ϕ	19.0 x 48.0 x 30.0
	9740H02R-003	5.925-6.425	350.0/700.0	70.0	120/230 VAC; 50/60 Hz 1 ϕ	19.0 x 70.0 x 30.0
X-Band	9040H03	7.9-8.4	40.0	44.0	120/240 VAC; -24/48 VDC	19.0 x 3.5 x 15.6
Ku-Band	9020H04	14.0-14.5	20.0	50.0	120/240 VAC;-24/48 VDC	19.0 x 15.6 x 3.5
	9225H04	14.0-14.5	225.0	60.0	120/240 VAC;-50/60 Hz 1 ϕ	19.0 x 21.0 x 24.0
	9015H04	14.0-14.5	15.0	50.0	120/240 VAC; -24/48 VDC	19.0 x 3.5 x 15.6
	9260H04	14.0-14.5	600.0	60.0	208 VAC 3 ϕ	19.0 x 25.0 x 30.0

▲ Under development ‡ Electronic power conditioner § Pulsed 0.33% duty

Dimensions L x W x H (cm)	Weight (lbs.)	Weight (kg)	Focusing	Modulation Control	Cooling	Model Number	
50.8 x 7.62 dia	22.0	10.0	Sol	A	L	551H	**S-Band**
44.45 x 6.35 dia	10.0	4.55	PPM	SG	L	▲562H	
50.8 x 10.16 x 8.13	10.0	4.55	PPM	SG	C	▲580H	**C-Band**
91.44 x 30.48 dia	175.0	79.55	IS	A	V	▲636H	
60.96 x 15.24 dia	57.0	25.41	IS	A	L	▲8713H	
43.18 x 10.16 x 8.13	10.0	4.55	PPM	SG	C	▲869H	**X-Band**
43.18 x 7.62 x 7.11	8.0	3.64	PPM	A	C	▲8730H	
36.07 x 5.08 dia	7.5	3.41	PPM	CP	L	8731H	
55.88 x 15.24 dia	60.0	27.27	IS	A	L	875H	**Ku-Band**
50.80 x 17.78 dia	65.0	29.55	IS	A	L	▲832H	
63.50 x 30.48 x 30.48	60.0	27.27	Sol	CP	L	▲819H	**mm-wave**
35.56 x 10.16 x 12.70	13.0	5.91	PPM	CP	C	920H	

Dimensions L x W x H (cm)	Weight (lbs.)	Weight (kg)	Focusing	Modulation Control	Cooling	Model Number	
68.58 x 20.32 x 20.32	140.0	63.64	IS	A	L	663H	**C-Band**
28.45 x 5.08 x 6.1	4.0	1.82	PPM	—	FA	670HA	
40.64 x 7.1 x 7.1	6.0	2.72	PPM	A	FA	677H	
56.13 x 10.67 x 8.64	10.0	4.55	PPM	A	FA	662H	
86.36 x 19.05 dia	95.0	43.18	Sol	A	L	614H	
45.72 x 15.24 dia	42.0	19.09	Sol	A	L	745H	
55.88 x 13.97 dia	30.0	13.64	PPM	SG	L	751H/103	
53.34 x 15.49 dia	68.0	30.91	IS	A	L	767H	
53.34 x 15.49 dia	65.0	29.55	IS	A	L	792H	
68.58 x 17.27 dia	120.0	54.55	IS	A	L	▲8723H	
60.96 x 15.49 dia	80.0	36.36	IS	A	L	▲784H	
66.04 x 16.0 dia	40.0	18.18	PPM	A	FA	8760H	
28.45 x 5.08 x 6.1	4.0	1.82	PPM	—	FA	8736H	**X-Band**
26.20 x 17.78 dia	65.0	29.55	IS	A	L	870H	**Ku-Band**
43.18 x 7.62 x 7.62	10.0	4.55	PPM	A	FA	▲8730H	
23.62 x 5.08 x 5.84	4.0	1.82	PPM	—	FA	848HA	
54.86 x 13.21 x 6.35	11.0	5.0	PPM	A	FA	881H	
54.86 x 12.19 x 15.75	28.0	12.73	PPM	A	FA	876H	
45.72 x 10.16 dia	12.0	5.45	PPM	A	FA	914H	**mm-wave**
45.72 x 10.16 dia	12.0	5.45	PPM	A	FA	913H	
45.72 x 10.16 dia	12.0	5.45	PPM	A	L/FA	915H	
38.1 x 10.16 x 25.4	17.0	7.73	PPM	CP	L	▲812H	
45.72 x 25.4 x 30.48	50.0	22.73	Sol	CP	L	▲813H	
45.72 x 22.66 x 25.40	40.0	18.18	Sol	CP	L	▲814H	

Dimensions W x H x D (cm)	Weight (lbs.)	Weight (kg)	TWT Model Number	Type	Amplifier Model Number	
48.26 x 13.34 x 50.8	75.0	34.09	677H	Power Amplifier	9210H02▲	**C-Band**
48.26 x 8.89 x 39.62	30.0	13.64	670HA	Power Amplifier	9040H02	
48.26 x 35.56 x 63.5	90.0	40.91	670HA	Redundant Subsystem	9640H02	
48.26 x 53.34 x 60.96	170.0	77.27	662H	HPA	9240H02	
48.26 x 121.91 x 76.2	400.0	181.82	662H	Redundant Subsystem	9740H02	
48.26 x 177.8 x 76.2	400.0	181.82	662H	Redundant/ Pwr Combined Subsystem	9740H02R-003	
48.26 x 8.89 x 39.62	30.0	13.64	8736H	Power Amplifier	9040H03	**X-Band**
48.26 x 39.62 x 8.89	20.0	9.09	848HA	Power Amplifier	9020H04	**Ku-Band**
48.26 x 53.34 x 60.96	170.0	77.27	881H	HPA	9225H04	
48.26 x 8.89 x 39.62	30.0	13.64	848HA	Power Amplifier	9015H04	
48.26 x 63.5 x 76.2	200.0	90.91	876H	HPA	9260H04	

Table E—SPACE TYPE CW TWTs[1]

	Model Number	Frequency Range (GHz)	Power (W)	Saturated Gain (dB)	Cathode Voltage Ek (kV)	Cathode Current Ik (A)
L-Band	291H[6]	1.5-1.6	7.0/26.0/60.0	23, 33, 47	-2.63	0.014, 0.027, 0.057
	414H	1.5-2.0	12.0	28	-1.2	0.05
	222H	1.6-1.8	23.0	37	-27	0.044
S-Band	278H	2.0-2.1	26.0	44	-2.4	0.046
	8281H	2.0-2.3	300.0	35	4.9	0.170
	214H	2.2-2.4	8.0	27	-0.93	0.04
	283H	2.5-2.7	100.0	42	-3.3	0.1
	297H	2.5-2.7	50.0	4	-2.54	0.056
C-Band	235H	3.7-4.2	12.0	43	-1.8	0.04
	230H	3.7-4.2	5.5	55	-1.3	0.022
	244H	3.7-4.2	4.5	54	-1.3	0.022
	249H	3.7-4.2	8.5	57	-1.6	0.03
	271H	3.7-4.2	6.0	57	-1.2	0.025
	272H	3.7-4.2	1.5	35	-1.63	0.09
	275H	3.7-4.2	5.0	55	-1.3	0.022
	276H	3.7-4.2	0.5	31	-1.05	0.005
	277H	3.7-4.2	5.5	55	-1.35	0.025
	246H	3.7-4.2	12.0	57	1.8	0.35
	296H	3.7-4.2	5.0	55	-1.28	0.021
	8510H	3.7-4.2	7.5	58	-1.4	0.030
	8511H	3.7-4.2	9.5	58	-1.6	0.035
	279H	5.9-6.4	100.0	33	-3.6	0.085
X-Band	240H	6.0-9.0	20.0	40	-3.4	0.042
	240HA	6.0-9.0	16.0	46	-3.4	0.040
	263H	7.0-8.0	0.5	32	-1.75	0.005
	293H	7.0-8.0	40.0	53	-4.0	0.053
	298H	7.0-8.0	10.0	50	-2.6	0.026
	265H	7.0-9.0	22.0	46	-3.8	0.05
	287H	7.9-8.4	50.0	33	-4.25	0.057
	219H	8.0-9.0	20.0	40	-3.4	0.04
	285H	8.4-8.5	24.0	37	-3.3	0.036
Ku-Band	837H	10.0-15.0	1.2	45	-1.86	0.009
	280H	10.5-13.0	10.0	54	-3.0	0.029
	286H	11.0-12.0	12.0	47	-2.93	0.03
	▲286H	11.0-12.0	20.0	57	-4.06	0.038
	289H	11.7-12.2	20.0	50	-3.6	0.040
	837HD	11.9-12.1	1.3	45	-1.88	0.01
	845H	11.9-13.8	1.5	44	-2.0	0.01
	294H[2,4]	11.95-12.13	100.0	40	-8.1	0.056
	837HA	12.0-16.0	1.0	45	-1.84	0.009
	284H[2,4]	12.038-12.123	250.0	38	-8.2	0.092
	295H	13.0-14.0	20.0	48	-3.45	0.042
	837HB	13.0-14.0	1.0	45	-1.85	0.009
	851H	13.5-14.0	20.0	53	-3.55	0.05
	837HC	13.7-14.1	1.0	45	-1.88	0.01
	874H	13.8-15.0	60.0	47	-5.0	0.075
	264H	14.0-15.0	16.0	46	-3.45	0.041
	288H	14.0-15.0	16.0	46	-3.45	0.042
	8294H[3,4]	14.52-14.68	100.0	40	-8.0	0.056
	288HC	14.85-15.15	15.0	45	-3.4	0.04
	292H	17.75-20.25	4.0	50	-4.5	0.017
K-Band	▲882H	17.0-22.0	15.0	45	-6.0	0.030
	▲918H	17.0-22.0	25/75	20/50	-11.0	0.075
	268H	18.0-22.0	2.0	42	-3.9	0.013
	950H[6]	19.0-23.0	3.5/7.0/15/30	55	-6.75	0.05
mm-wave	950HA	22.0-32.0	10.0	46	-6.0	0.030
	254H	29.0-31.0	2.0	42	-5.5	0.007
	251H	30.0-32.0	3.0	43	-5.4	0.012
	▲943H[5]	41.0-43.0	200.0	47	-21.0	0.095
	▲944H	42.0-42.5	100.0	44	-14.5	0.046
	▲985H[5]	84.0-86.0	200.0	47	-25.0	0.160

▲ = under development

[1] All models are PPM focused and conduction cooled unless otherwise noted

[2] Anode mod control [3] Aperature grid [4] Conduction radiation cooling [5] Radiation cooling [6] Multi-power levels

Dimensions L x W x H (Inches)	Dimensions L x W x H (cm)	Weight (lbs.)	Weight (kg)	Model Number	
20.2 x 4.3 x 2.7	51.31 x 10.92 x 6.86	9.0	4.09	291H[6]	**L-Band**
11.5 x 1.6 x 1.6	29.21 x 4.06 x 4.06	1.4	0.64	414H	
17.5 x 2.5 x 2.77	44.45 x 6.35 x 7.04	4.2	1.91	222H	
17.5 x 2.25 x 2.5	44.45 x 5.72 x 6.35	5.0	2.27	278H	**S-Band**
22.0 x 7.5 x 4.3	55.88 x 19.05 x 10.92	12.0	5.45	8281H	
8.25 x 3.0 x 1.1	20.96 x 7.62 x 2.79	1.0	0.45	214H	
14.5 x 2.6 x 3.0	36.83 x 6.60 x 7.62	4.2	1.91	283H	
15.0 x 2.0 x 2.0	38.10 x 5.08 x 5.08	3.5	1.59	297H	
11.0 x 1.6 x 1.4	27.94 x 4.06 x 3.56	1.2	0.55	235H	**C-Band**
12.4 x 1.9 x 2.3	31.50 x 4.83 x 5.84	1.25	0.57	230H	
12.4 x 1.9 x 2.3	31.5 x 4.83 x 5.84	1.6	0.73	244H	
13.0 x 1.9 x 2.3	33.02 x 4.83 x 5.84	1.7	0.77	249H	
12.3 x 1.9 x 1.8	31.24 x 4.83 x 4.57	1.75	0.80	271H	
12.0 x 1.9 x 1.84	30.48 x 4.83 x 4.67	1.31	0.60	272H	
12.0 x 1.9 x 1.75	30.48 x 4.83 x 4.45	1.5	0.68	275H	
10.2 x 1.9 x 1.84	25.91 x 4.83 x 4.67	1.2	0.55	276H	
12.0 x 2.3 x 1.8	30.48 x 5.84 x 4.57	1.5	0.68	277H	
14.0 x 2.0 x 2.0	35.56 x 5.08 x 5.08	1.8	0.82	246H	
12.1 x 1.9 x 2.3	30.73 x 4.83 x 5.84	1.4	0.64	296H	
14.0 x 2.0 x 2.0	35.56 x 5.08 x 5.08	1.8	0.82	8510H	
14.0 x 2.0 x 2.0	35.56 x 5.08 x 5.08	1.8	0.82	8511H	
12.0 x 2.5 x 2.5	30.48 x 6.35 x 6.35	3.0	1.36	279H	
12.3 x 3.0 x 1.5	31.24 x 7.62 x 3.81	2.75	1.25	240H	**X-Band**
12.5 x 4.6 x 2.2	31.75 x 11.68 x 5.59	3.1	1.41	240HA	
9.6 x 1.1 x 1.4	24.38 x 2.79 x 3.56	1.0	0.45	263H	
13.25 x 2.5 x 2.5	33.66 x 6.35 x 6.35	3.6	1.63	293H	
11.4 x 2.18 x 1.7	28.96 x 5.5 x 4.32	1.5	0.68	298H	
12.0 x 2.2 x 1.3	30.48 x 5.59 x 3.30	2.2	1.00	265H	
11.7 x 1.6 x 2.0	29.72 x 4.06 x 5.08	2.25	1.02	287H	
10.5 x 2.3 x 1.7	26.67 x 5.84 x 4.32	1.5	0.68	219H	
11.7 x 1.6 x 2.0	29.72 x 4.06 x 5.08	2.25	1.02	285H	
9.4 x 1.7 x 1.8	23.88 x 4.32 x 4.57	1.2	0.55	837H	**Ku-Band**
9.8 x 1.9 x 1.6	24.89 x 4.83 x 4.06	1.25	0.57	280H	
10.0 x 2.0 x 2.0	25.4 x 5.08 x 5.08	1.8	0.81	286H	
13.0 x 2.0 x 2.0	33.02 x 5.08 x 5.08	2.0	0.91	▲286HP	
13.0 x 2.0 x 2.0	33.02 x 5.08 x 5.08	1.7	0.75	289H	
9.4 x 1.7 x 1.8	23.88 x 4.32 x 4.57	1.2	0.55	837HD	
11.0 x 1.9 x 2.6	27.94 x 4.83 x 6.60	1.8	0.81	845H	
21.0 x 6.0 dia	53.34 x 15.24 dia	14.6	6.64	294H[2,4]	
10.0 x 1.9 x 2.7	25.40 x 4.83 x 6.86	1.4	0.64	837HA	
18.0 x 9.8 dia	45.72 x 24.89 dia	26.2	11.91	284H[2,4]	
10.25 x 2.65 x 1.85	26.04 x 6.73 x 4.70	2.4	1.09	295H	
9.4 x 1.7 x 1.8	23.88 x 4.32 x 4.57	1.2	0.55	837HB	
10.0 x 1.9 x 2.7	25.40 x 4.83 x 6.86	1.63	0.74	851H	
10.3 x 1.9 x 2.3	26.16 x 4.83 x 5.84	1.4	0.64	837HC	
14.0 x 4.0 x 3.0	35.56 x 10.16 x 7.62	6.0	2.73	874H	
10.25 x 2.65 x 1.85	26.04 x 6.73 x 4.70	2.5	1.14	264H	
10.25 x 2.65 x 1.85	26.04 x 6.73 x 4.70	2.4	1.09	288H	
21.0 x 6.0 dia	53.34 x 15.24 dia	14.6	6.64	8294H[3,4]	
10.25 x 2.65 x 1.85	26.04 x 6.73 x 4.70	2.4	1.09	288HC	
12.0 x 1.5 x 1.5	30.48 x 3.81 x 3.81	1.9	0.86	292H	
13.0 x 2.5 x 3.0	33.02 x 6.35 x 7.62	2.2	1.0	▲882H	**K-Band**
16.0 x 3.0 x 3.0	40.64 x 7.62 x 7.62	6.0	2.73	▲918H	
9.6 x 1.8 x 2.0	24.38 x 4.57 x 5.08	1.2	0.55	268H	
13.5 x 3.0 x 3.0	34.29 x 7.62 x 7.62	2.0	0.91	950H[6]	
13.5 x 3.0 x 3.0	34.29 x 7.62 x 7.62	2.0	0.91	950HA	**mm-wave**
10.0 x 1.9 x 1.9	24.50 x 4.83 x 4.83	1.2	0.55	254H	
12.4 x 2.5 x 2.0	31.50 x 6.35 x 5.08	1.8	0.82	251H	
14.0 x 5.0 x 5.0	35.56 x 12.70 x 12.70	15.0	6.82	▲943H[5]	
17.0 x 5.0 x 5.0	43.18 x 12.70 x 12.70	15.0	6.82	▲944H	
18.0 x 6.0 x 6.0	45.72 x 15.24 x 15.24	18.0	8.18	▲985H[5]	

Table F—SPACE TYPE CW TWTAs

	Amplifier Model Number	Frequency Range (GHz)	Power Output (W)	Saturated Gain (dB)	Input Voltage (Vdc)	Dimensions L x W x H (Inches)
S-Band	1266H	2.0-2.1	26.0	44	22-42	13.7 x 3.0 x 4.0
	1190H	2.2-2.3	15.0	30	22-32	11.0 x 6.0 x 4.2
	1272H	2.5-2.7	50.0	47	23-42	14.0 x 6.0 x 5.0
C-Band	1243H	3.7-4.2	4.5	54	22-42	13.5 x 4.0 x 3.25
	1244H	3.7-4.2	8.5	57	22-42	13.25 x 4.0 x 3.25
	1253H	3.7-4.2	8.5	57	50 ± 2%	13.25 x 4.0 x 3.25
	1264H	3.7-4.2	5.5	55	22-40	13.23 x 4.3 x 3.2
	1288H	3.7-4.2	5.0	53	24-36	13.3 x 3.5 x 3.3
	1224H	4.1-4.2	0.2	51	28 ± 2%	11.0 x 3.5 x 1.7
X-Band	1240H	6.0-10.0	20.0	48	22-33	12.0 x 6.1 x 4.1
	1200H	7.0-8.0	0.5	32	23-33	10.0 x 4.0 x 2.5
	1238H	7.0-8.0	40.0	53	22-33	15.15 x 6.0 x 4.7
	1241H	7.0-8.0	40.0	53	22-33	15.15 x 6.0 x 4.7
	1202H	7.0-9.0	22.0	46	23-33	12.0 x 5.0 x 3.0
	1248H	7.25-7.75	10.0	50	22-33	13.6 x 4.3 x 4.3
	1255H	7.25-7.75	40.0	53	22-33	15.15 x 6.0 x 4.7
Ku-Band	1292H	11.9-12.1	1.0	45	26-29	11.4 x 5.1 x 2.6
	1268H	11.9-13.8	1.5	55	22-42	13.25 x 4.0 x 3.25
	1247H	11.7-12.2	20.0	57	21-35	12.75 x 5.0 x 4.2
	1250H	13.0-14.0	20.0	48	23-35	13.0 x 4.4 x 3.7‡
	1256H	13.25-13.75	2000§	43	24-33	16.25 x 6.75 x 6.25‡
	1218H	13.5-14.5	1.5	40	24-30	11.0 x 5.7 x 2.5
	1220H	13.5-14.5	20.0	53	24-30	12.0 x 6.5 x 4.25
	1230H	14.0-15.0	16.0	46	23-35	13.0 x 4.4 x 3.7‡
	1260H	14.0-15.0	16.0	46	23-35	13.0 x 4.4 x 3.7‡
	1294H	17.75-20.25	4.0	50	24-32	13.25 x 4.2 x 3.5
mm-wave	1254H	30.0-32.0	3.0	43	2.8-29.6	13.25 x 4.4 x 3.4

Table G—TWT AMPLIFIERS

	Amplifier Model Number	Frequency Range (GHz)	Power Output (W)	Saturated Gain (dB)	Input Voltage (Vac ϕ)	Dimensions L x W x H (Inches)
S-Band	1233H	2.0-4.0	8.0	35	208.3	19.0 x 6.5 x 7.0
	1160H	2.9-3.1	3000§	70	115.3	20.0 x 4.0 x 8.0
C-Band	1234H	4.0-8.0	20.0	38	208.3	19.0 x 6.5 x 7.0
X-Band	1235H	8.0-12.4	4.0	33	208.3	19.0 x 6.5 x 7.0
Ku-Band	1236H	12.4-18.0	5.0	37	208.3	19.0 x 6.5 x 7.0
mm-wave	1228H	37.0-38.0	2.0	30	28-34 Vdc	13.5 x 8.0 x 3.5

§ Pulsed
‡ Power Supply Dimension Only

Dimensions L x W x H (cm)	Weight (lbs.)	Weight (kg)	TWT Model Number	Amplifier Model Number	
34.93 x 7.62 x 10.16	7.5	3.41	278H	1266H	**S-Band**
27.94 x 15.24 x 10.67	8.5	3.86	256H	1190H	
35.56 x 15.24 x 12.70	9.0	4.09	297H	1272H	
33.66 x 10.16 x 8.26	4.6	2.09	244H	1243H	**C-Band**
33.66 x 10.16 x 8.26	5.0	2.27	249H	1244H	
33.66 x 10.16 x 8.26	3.1	1.41	249HA	1253H	
33.60 x 10.92 x 8.13	3.0	1.36	230H	1264H	
33.78 x 8.89 x 8.38	3.75	1.70	296H	1288H	
27.94 x 8.9 x 4.32	2.7	1.23	233HC	1224H	
30.48 x 15.5 x 10.41	9.6	4.36	265HA	1240H	**X-Band**
25.4 x 10.16 x 6.35	4.5	2.05	263H	1200H	
38.48 x 15.24 x 11.94	15.75	7.16	293H	1238H	
38.48 x 15.24 x 11.94	16.5	7.5	293HA	1241H	
30.48 x 12.7 x 7.62	9.5	4.32	265H	1202H	
34.54 x 10.92 x 10.92	6.5	2.95	298H	1248H	
38.48 x 15.24 x 11.94	15.0	6.82	293HB	1255H	
28.96 x 12.95 x 6.6	4.4	2.00	837HD	1292H	**Ku-Band**
33.66 x 10.16 x 8.26	3.5	1.59	845H	1268H	
32.39 x 12.70 x 10.67	7.5	3.41	286HP	1247H	
33.02 x 11.18 x 9.4	7.0‡	3.18	295H	1250H	
41.28 x 17.15 x 15.88	30.0	13.64	853H	1256H	
27.94 x 14.48 x 6.35	6.0	2.73	837HA	1218H	
30.48 x 16.51 x 10.8	9.25	4.20	851H	1220H	
33.02 x 11.18 x 9.4	7.0‡	3.18	288H	1230H	
33.02 x 11.18 x 9.4	7.0‡	3.18	264H	1260H	
33.66 x 10.67 x 8.89	4.8	2.18	292H	1294H	
33.66 x 11.18 x 8.64	5.5	2.50	251H	1254H	**mm-wave**

Dimensions L x W x H (cm)	Weight (lbs.)	Weight (kg)	TWT Model Number	Amplifier Model Number	
48.26 x 16.51 x 17.78	18.5	8.41	564H-8	1233H	**S-Band**
50.8 x 10.16 x 20.32	28.0	12.72	543H - 544H	1160H	
48.26 x 16.51 x 17.78	18.5	8.41	640H-8	1234H	**C-Band**
48.26 x 16.51 x 17.78	18.5	8.41	771H-8	1235H	**X-Band**
48.26 x 16.51 x 17.78	18.5	8.41	848H-8	1236H	**Ku-Band**
34.29 x 20.32 x 8.89	8.0	3.64	863H	1228H	**mm-wave**

Table H—INSTRUMENTATION POWER AMPLIFIERS

	Amplifier Model Number	Frequency Range (GHz)	Power Output (W)	Saturated Gain (dB)	Dimensions L x W x H (Inches)	Dimensions L x W x H (cm)
L-Band	1177H09F000	1.0-2.0	10.0	30	15.5 x 16.75 x 3.5	39.37 x 42.55 x 8.89
	1277H09F000	1.0-2.0	20.0	30	15.5 x 16.75 x 3.5	39.37 x 42.55 x 8.89
	1177H10F000	1.4-2.4	20.0	30	15.5 x 16.75 x 3.5	39.37 x 42.55 x 8.89
S-Band	1177H01F000	2.0-4.0	10.0	30	15.5 x 16.75 x 3.5	39.37 x 42.55 x 8.89
	1277H01F00	2.0-4.0	20.0	30	15.5 x 16.75 x 3.5	39.37 x 42.55 x 8.89
	1177H05F000	2.5-4.0	20.0	30	15.5 x 16.75 x 3.5	39.37 x 42.55 x 8.89
C-Band	1177H13F000	3.0-8.0	10.0	30	15.5 x 16.75 x 3.5	39.37 x 42.55 x 8.89
	1177H16F000	3.9-11.7	10.0*	30*	15.5 x 16.75 x 3.5	39.37 x 42.55 x 8.89
	1177H02F000	4.0-8.0	10.0	30	15.5 x 16.75 x 3.5	39.37 x 42.55 x 8.89
	1277H02F000	4.0-8.0	20.0	30	15.5 x 16.75 x 3.5	39.37 x 42.55 x 8.89
	1177H06F000	4.0-10.5	10.0	30*	15.5 x 16.75 x 3.5	39.37 x 42.55 x 8.89
	1177H14F000	5.0-10.0	10.0	30	15.5 x 16.75 x 3.5	39.37 x 42.55 x 8.89
	1177H07F000	6.5-13.5	10.0	30	15.5 x 16.75 x 3.5	39.37 x 42.55 x 8.89
	1177H17F000	7.0-16.5	10.0	30	15.5 x 16.75 x 3.5	39.37 x 42.55 x 8.89
X-Band	1177H03F000	8.0-12.4	10.0	30	15.5 x 16.75 x 3.5	39.37 x 42.55 x 8.89
	1277H03F000	8.0-12.4	20.0	30	15.5 x 16.75 x 3.5	39.37 x 42.55 x 8.89
	1177H15F000	8.0-18.0	10.0	30	15.5 x 16.75 x 3.5	39.37 x 42.55 x 8.89
	1177H08F000	10.5-18.0	10.0	30	15.5 x 16.75 x 3.5	39.37 x 42.55 x 8.89
Ku-Band	1177H04F000	12.4-18.0	10.0	30	15.5 x 16.75 x 3.5	39.37 x 42.55 x 8.89
	1277H04F000	12.4-18.0	20.0	30	15.5 x 16.75 x 3.5	39.37 x 42.55 x 8.89
K-Band	1077H11F000	18.0-26.5	1.0	30	15.5 x 16.75 x 3.5	39.37 x 42.55 x 8.89
Ka-Band	1077H12F000	26.5-40.0	1.0	30	15.5 x 16.75 x 3.5	39.37 x 42.55 x 8.89

Note: Each amplifier contains a PPM-focused, metal-ceramic TWT, all solid-state, air-cooled power supply in a 19-inch instrument case.
Options: Isolator/circulators, high gain, and automatic reset. 220/240 ac or 28/48 dc input voltage, unattended protection, rack mounting, local/remote, 48 to 420 Hz, logic circuit (TTL).
Warranty: One year regardless of operating hours.
* Slightly lower at band edges.

Table I—KLYSTRONS

	Model Number	Frequency Range (GHz)	Minimum Power Output (kW)	Duty Cycle	Saturated Gain (dB)	Cathode Voltage Ek (kV)	Cathode Current Ik (A)	Dimensions L x W x H (Inches)
X-Band	173H	9.2-9.4	0.1	0.33	30.0	-3.0	0.15	5.0 x 3.5 x 3.5
	793H	9.2-9.4	0.1	0.33	40.0	-3.0	0.15	5.0 x 3.5 x 3.5
	8710H	9.2-9.4	0.1	0.33	40.0	-3.0	0.15	5.0 x 3.5 x 3.5
	8734H	9.2-9.4	0.1	0.5	30.0	-3.3	0.20	5.0 x 3.5 x 3.5
	173H Mod.	10.0-10.25	0.2	CW	40.0	-3.6	0.22	6.0 x 4.0 x 4.0
Ku-Band	8702H	12.6-12.9	0.036	CW	40.0	-2.0	0.10	6.0 x 3.9 x 5.5

SYMBOLS

A = mod anode
AG = Aperture Grid
C = conduction
CP = cathode pulse
FA = forced air
G = high mu grid
IS = integral solenoid
L = liquid
PM = permanent magnet
PPM = periodic-permanent magnet
SG = shadow grid
Sol = solenoid
V = vapor phase

Weight (pounds)	Weight (kg)	Connector Type	Input Voltage (Vac. 1 ϕ)	Input Frequency (A)	TWT Model Number	Amplifier Model Number	
25.0	11.36	N	115.0	50/60	417H	1177H09F000	**L-Band**
25.0	11.36	N	115.0	50/60	418H	1277H09F000	
20.0	9.09	N	115.0	50/60	419H	1177H10F000	
20.0	9.09	N	115.0	50/60	564H	1177H01F000	**S-Band**
20.0	9.09	N	115.0	50/60	568H	1277H01F000	
20.0	9.09	N	115.0	50/60	564HS	1177H05F000	
20.0	9.09	N	115.0	50/60	646H	1177H13F000	**C-Band**
20.0	9.09	N	115.0	50/60	664H	1177H16F000	
20.0	9.09	N	115.0	50/60	648H	1177H02F000	
20.0	9.09	N	115.0	50/60	640H	1277H02F000	
20.0	9.09	N	115.0	50/60	648HS	1177H06F000	
20.0	9.09	N	115.0	50/60	746H	1177H14F000	
20.0	9.09	N	115.0	50/60	771HS	1177H07F000	
20.0	9.09	SMA	115.0	50/60	785H	1177H17F000	
20.0	9.09	N	115.0	50/60	771H	1177H03F000	**X-Band**
20.0	9.09	N	115.0	50/60	783H	1277H03F000	
20.0	9.09	SMA	115.0	50/60	846H	1177H15F000	
20.0	9.09	SMA or WR-62	115.0	50/60	848HS	1177H08F000	
20.0	9.09	SMA or WR-62	115.0	50/60	848H	1177H04F000	**Ku-Band**
20.0	9.09	WR-62	115.0	50/60	856H	1277H04F000	
20.0	9.09	WR-42	115.0	50/60	911H	1077H11F000	**K-Band**
20.0	9.09	WR-28	115.0	50/60	912H	1077H12F000	**Ka-Band**

Dimensions L x W x H (cm)	Weight (lbs.)	Weight (kg)	Focusing	Modulation Control	Cooling	Model Number	
12.7 x 8.89 x 8.89	4.5	2.05	PM	CP	L	173H	**X-Band**
12.7 x 8.89 x 8.89	4.5	2.05	PM	CP	FA	793H	
12.7 x 8.89 x 8.89	4.5	2.05	PM	G	FA	8710H	
12.7 x 8.89 x 8.89	4.5	2.05	PM	G	C	8734H	
15.24 x 10.16 x 10.16	5.0	2.27	PM	CP	FA	173H Mod.	
15.24 x 9.1 x 13.97	7.25	3.30	PM	CP	FA	8702H	**Ku-Band**

Cross Index of Models

Model No.	Table	Page No.
173H	I	52
173H MOD	I	52
214H	E	48
219H	E	48
222H	E	48
230H	E	48
235H	E	48
240H	E	48
240HA	E	48
244H	E	48
246H	E	48
249H	E	48
251H	E	48
254H	E	48
263H	E	48
264H	E	48
265H	E	48
268H	E	48
271H	E	48
272H	E	48
275H	E	48
276H	E	48
277H	E	48
278H	E	48
279H	E	48
280H	E	48
283H	E	48
284H	E	48
285H	E	48
286H	E	48
287H	E	48
288H	E	48
288HC	E	48
289H	E	48
291H	E	48
292H	E	48
293H	E	48
294H	E	48
295H	E	48
296H	E	48
297H	E	48
298H	E	48
307H	A	44
308H	A	44
414H	E	48
551H	B	46
555H	A	44
559H	A	44
560H	A	44
562H	B	46
580H	A/B	44/46
584H	A	44
587H	A	44
588H	A	44
589H	A	44
595H	A	44
598H	A	44
605H	A	44
614H	C	46
621H	A	44
622H	A	44
635H	A	44
636H	B	46
639H	A	44
641H	A	46
657H	A	44
658H	A	44
662H	C	44
663H	C	46
670HA	C	46
676H	A	44
677H	C	46
719H	A	44
725H	A	44
738H	A	44
745H	C	46
750H	A	44
751H	A	44
751H/103	C	46
760H	A	44
767H	C	46
774H	A	44
781H	A	44
784H	C	46
786H	A	44
788H	A	44
790H	A	44
792H	C	46
793H	I	52
796H	A	44
797H	A	44
812H	C	46
813H	C	46
814H	C	46
819H	B	46
820H	A	44
830H	A	44
832H	B	46
835H	A	44
837H	E	48
837HA	E	48
837HB	E	48
837HC	E	48
837HD	E	48
838H	A	44
839H	A	44
845H	E	48
848HA	C	46
851H	E	48
854H	A	44
861H	A	44

Model No.	Table	Page No.
866H	A	44
867H	A	44
869H	A/B	44/46
870H	C	46
874H	E	48
875H	B	46
876H	C	46
881H	C	46
882H	E	48
913H	C	46
914H	C	46
915H	C	46
918H	E	48
920H	B	46
943H	E	48
944H	E	48
950H	E	48
950HA	E	48
982H	A	44
985H	E	48
1160H	G	50
1190H	F	50
1200H	F	50
1202H	F	50
1218H	F	50
1220H	F	50
1224H	F	50
1228H	G	50
1230H	F	50
1233H	G	50
1234H	F/G	50
1235H	G	50
1236H	G	50
1238H	F	50
1240H	F	50
1241H	F	50
1244H	F	50
1247H	F	50
1248H	F	50
1250H	F	50
1253H	F	50
1254H	F	50
1255H	F	50
1256H	F	50
1260H	F	50
1264H	F	50
1266H	F	50
1268H	F	50
1272H	F	50
1288H	F	50
1292H	F	50
1294H	F	50
8281H	E	48
8294H	E	48
8503H	A	44
8510H	E	48
8511H	E	48
8702H	I	52
8708H	A	44
8709H	A	44
8710H	I	52
8713H	B	46
8715H	A	44
8716H	A	44
8718H	A	44
8723H	C	46
8725H	A	44
8730H	C/B	46
8731H	B	46
8734H	I	52
8736H	C	46
8740H	A	44
8741H	A	44
8753H	A	44
8754H	A	44
8760H	C	46
9015H04	D	46
9020H04	D	46
9040H02	D	46
9040H03	D	46
9040H04	D	46
9210H02	D	46
9225H04	D	46
9240H02	D	46
9260H04	D	46
9640H02	D	46
9740H02	D	46
9740H02R-003	D	46
1077H11F000	H	52
1077H12F000	H	52
1177H01F000	H	52
1177H02F000	H	52
1177H03F000	H	52
1177H04F000	H	52
1177H05F000	H	52
1177H06F000	H	52
1177H07F000	H	52
1177H08F000	H	52
1177H09F000	H	52
1177H10F000	H	52
1177H13F000	H	52
1177H14F000	H	52
1177H15F000	H	52
1177H16F000	H	52
1177H17F000	H	52
1277H01F000	H	52
1277H02F000	H	52
1277H03F000	H	52
1277H04F000	H	52
1277H09F000	H	52

Branch Offices:

Massachusetts
1050 Waltham Street
Lexington 02173
617/861-0358

Ohio
1918 Miami Valley Tower
4th and Ludlow Street
Dayton 45402
513/224-1061

Texas
Royal Center Tower, Suite 302-1
11300 North Central Expressway
Dallas 75243
214/369-9199

Virginia
1515 Wilson Boulevard
Arlington 22209
703/525-1550

International Office:

France
161, Rue de Tolbiac
75013 Paris, France
Phone: 33-(1)-580 95 27 Paris
Telex: QPA (204681) Hugprs

HUGHES
HUGHES AIRCRAFT COMPANY
ELECTRON DYNAMICS DIVISION
3100 West Lomita Boulevard
P.O. Box 2999
Torrance, California 90509
213/517-6000
Telex: 67-7064
TWX 910-347-7321

TRAVELING-WAVE TUBE
PRODUCTS

HUGHES

HUGHES AIRCRAFT COMPANY

ELECTRON DYNAMICS DIVISION

10 WATT SERIES COMMERCIAL TWT's

COVERING L-, S-, C-, X-, and KU-BANDS

MODEL 417H AT 1.0 - 2.0 GHZ
MODEL 564H AT 2.0 - 4.0 GHZ
MODEL 648H AT 4.0 - 8.0 GHZ
MODEL 771H AT 8.0 - 12.4 GHZ
MODEL 848H AT 12.4 - 18.0 GHZ

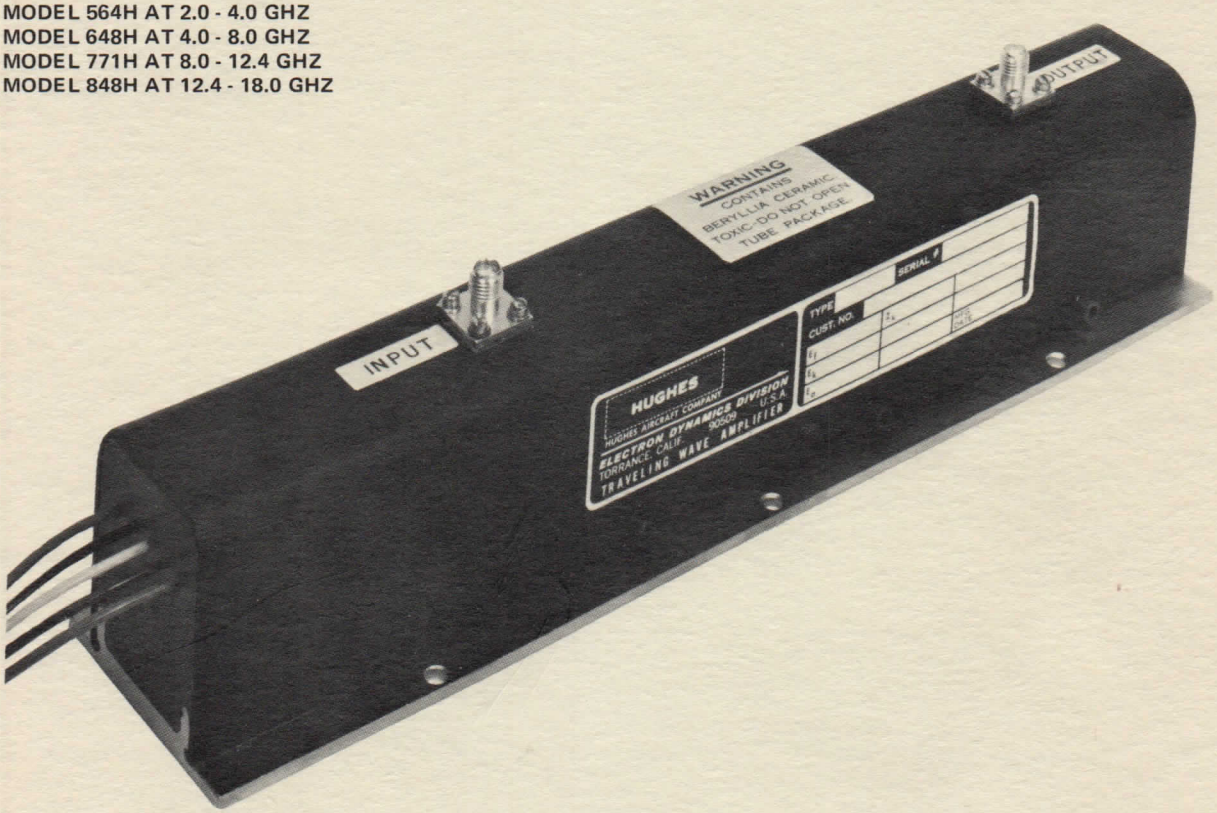

DESCRIPTION

The Hughes 10 watt traveling-wave tubes (TWT's) in this series have a wide variety of applications for laboratory testing and systems requirements. Their construction is based on the knowledge gained in the design and manufacture of the Hughes "space type" TWT's that have won world-wide recognition for their proven quality and reliability, having logged over two million hours of operation in space aboard the Surveyor, Mariner, Early Bird, Pioneer, ATS, Syncom, TACSAT, Intelsat and Apollo spacecrafts. The same facilities, technical know-how and craftsmanship is utilized in producing these commercial L-, S-, C-, X- and Ku-band TWT's. This, combined with proven reliability, allows us to warrant these TWT's for one year, regardless of the hours of operation.

SPECIFICATIONS[1]

ELECTRICAL

Model[2] Number	Frequency (GHz)	Cathode Voltage[3] (E_k) (-Vdc)	Cathode Current (I_k) (mA maximum)	Anode Voltage[3] (E_a) (Vdc)	Anode Current (I_a) (mA maximum)	% Collector Depression[4] (max.) (% of E_k)	Helix Current[5] (I_w) (mA maximum)
417 HD	1.0 – 2.0	1650 ± 100	90	400	2.0	30	15.0
564 HD	2.0 – 4.0	1500 ± 50	80	400	2.0	30	15.0
648 HD	4.0 – 8.0	2800 ± 100	65	400	2.0	50	6.0
771 HD	8.0 – 12.4	3400 ± 100	50	400	1.5	50	6.0
848 HD	12.4 – 18.0	3400 ± 200	50	400	1.5	50	6.0

ELECTRICAL RF PERFORMANCE

Power Output (saturated) . . . . . 10 watts minimum
Gain (at rated output) . . . . . 30 dB minimum
Heater Voltage (E_f) ± 0.3 V . . . . . 6.3 Vdc or ac
Heater Current (I_f) . . . . . 0.5 A maximum[6]
Collector Current (I_b) . . . . . Cathode current (I_k) - Helix current (I_w)
Helix Voltage (E_w) . . . . . Ground
Noise Figure (Typical – 30 dB) . . . . . 35 dB maximum
VSWR . . . . . 3.0:1 maximum

MECHANICAL

Construction. . . . . Metal ceramic
Cooling . . . . . Conduction
Focusing . . . . . PPM
Weight . . . . . 3 pounds maximum[7]
Connectors (input and output). . . . . SMA

ENVIRONMENTAL

Temperature (baseplate) . . . . . 85°C maximum
Altitude . . . . . 50,000 ft.

The TWT is rugged in design and will in general meet the requirements of MIL-E-5400. Contact Hughes Electron Dynamics Division for specific requirements.

WARRANTY

One year – no hour limit.

[1] Specifications subject to change without notice.

[2] For non-depressed collector delete D from model number.

[3] Voltage with respect to cathode.

[4] Percent collector depression = $E_b/E_k \times 100$, $-E_b$ = collector voltage with respect to helix.

[5] Includes body current.

[6] Model number 417HD is 0.8 A maximum.

[7] Model number 417HD is 7 pounds maximum.

NOTE: Power supply voltages must be within the following specified percentages of nameplate values under all conditions: Heater (E_f) ± 5%; Anode (E_a) ± 10%; Cathode (E_k) ± 2%; Collector (E_b) 0 volts to nameplate value.

417HD

L-band 10W TWT
Supplemental Data

HUGHES

HUGHES AIRCRAFT COMPANY

ELECTRON DYNAMICS DIVISION

TYPICAL PERFORMANCE

POWER OUT AND GAIN
AT RATED OUTPUT VERSUS FREQUENCY

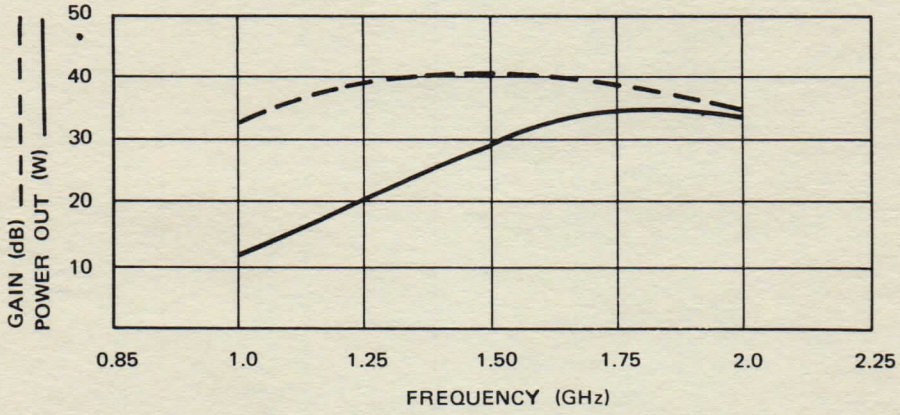

POWER OUTPUT VERSUS POWER INPUT

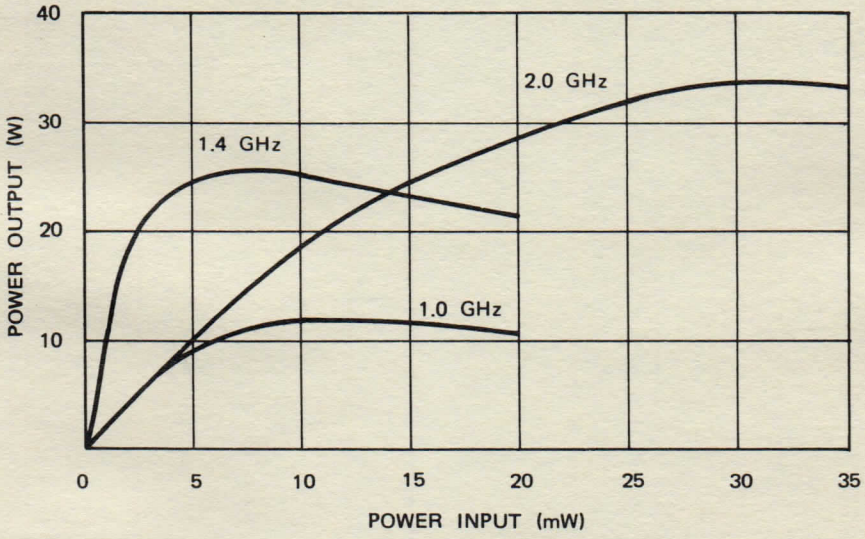

HUGHES
HUGHES AIRCRAFT COMPANY
ELECTRON DYNAMICS DIVISION 3100 West Lomita Boulevard, Torrance, California 90509, Tel (213) 534-2121

Printed in U.S.A. 9-73

564HD

S-band 10W TWT Supplemental Data

HUGHES

HUGHES AIRCRAFT COMPANY

ELECTRON DYNAMICS DIVISION

TYPICAL PERFORMANCE

POWER OUT AND GAIN
AT RATED OUTPUT VERSUS FREQUENCY

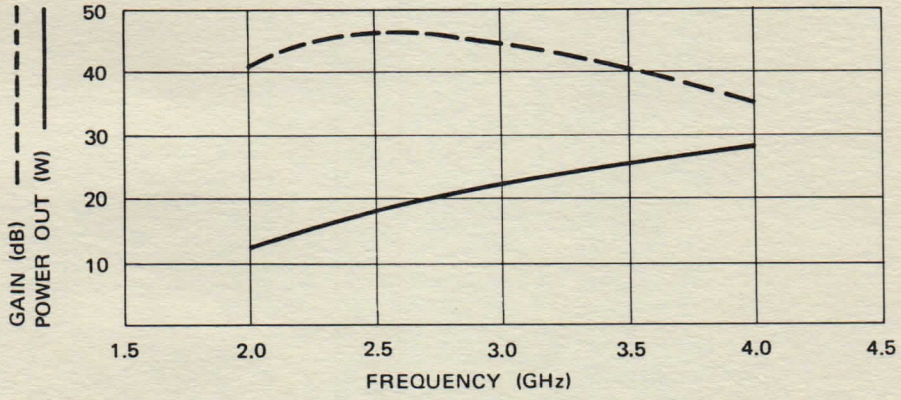

POWER OUTPUT VERSUS POWER INPUT

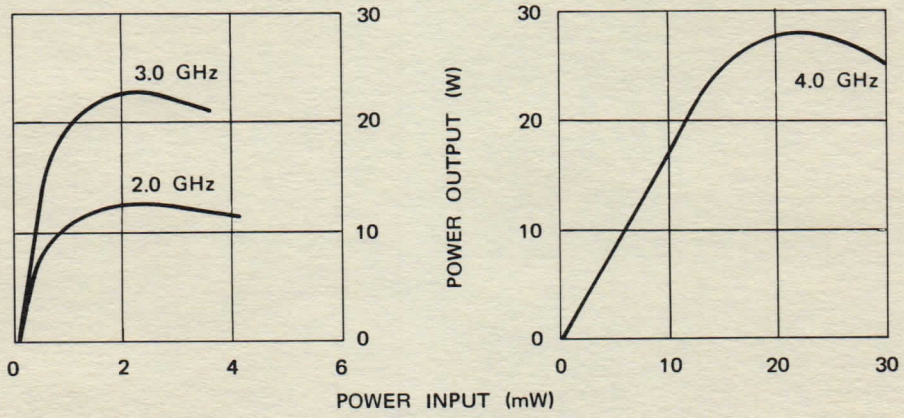

HUGHES
HUGHES AIRCRAFT COMPANY
ELECTRON DYNAMICS DIVISION 3100 West Lomita Boulevard, Torrance, California 90509, Tel (213) 534-2121

Printed in U.S.A. 9-73

648HD

C-band 10W TWT
Supplemental Data

HUGHES

HUGHES AIRCRAFT COMPANY

ELECTRON DYNAMICS DIVISION

TYPICAL PERFORMANCE

POWER OUT AND GAIN
AT RATED OUTPUT VERSUS FREQUENCY

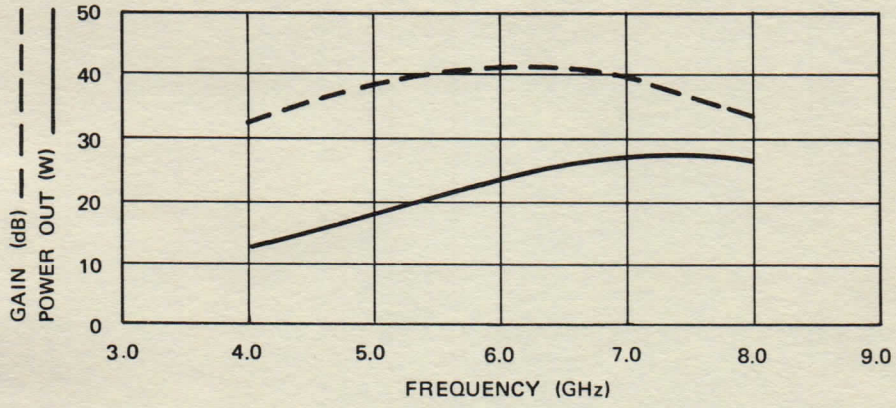

POWER OUTPUT VERSUS POWER INPUT

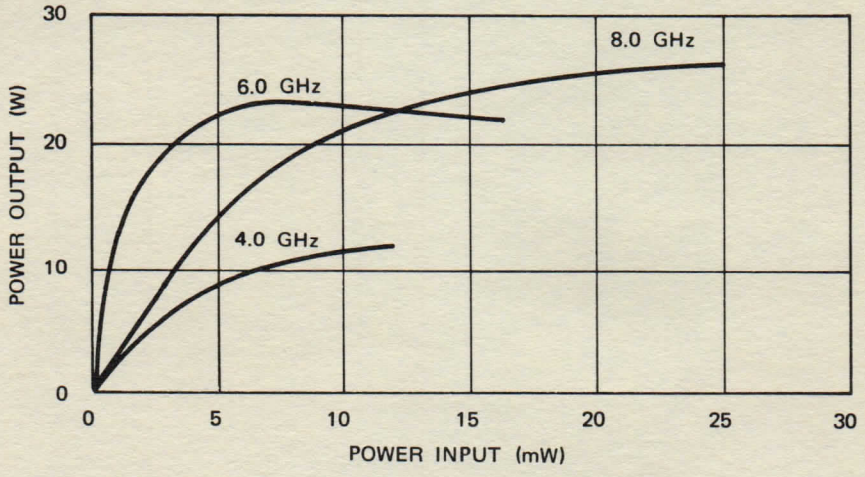

HUGHES ELECTRON DYNAMICS DIVISION 3100 West Lomita Boulevard, Torrance, California 90509, Tel (213) 534-2121

Printed in U.S.A. 9-73

771HD

X-band 10W TWT Supplemental Data

HUGHES

HUGHES AIRCRAFT COMPANY

ELECTRON DYNAMICS DIVISION

TYPICAL PERFORMANCE

POWER OUT AND GAIN
AT RATED OUTPUT VERSUS FREQUENCY

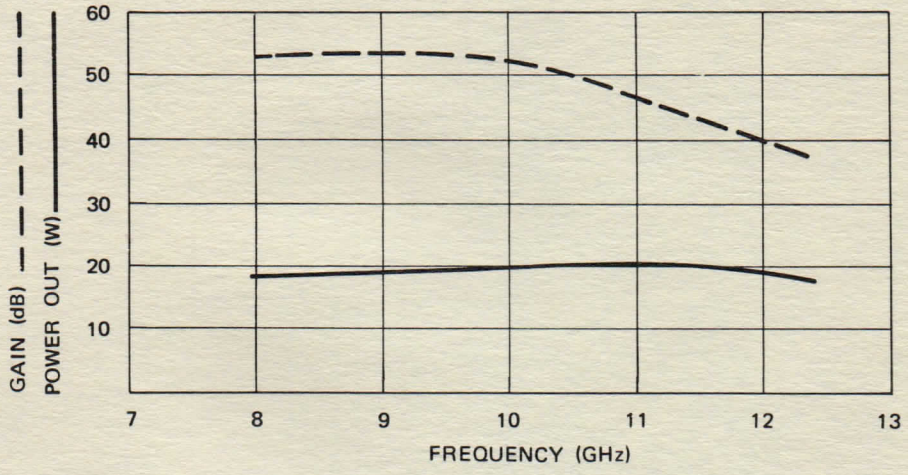

POWER OUTPUT VERSUS POWER INPUT

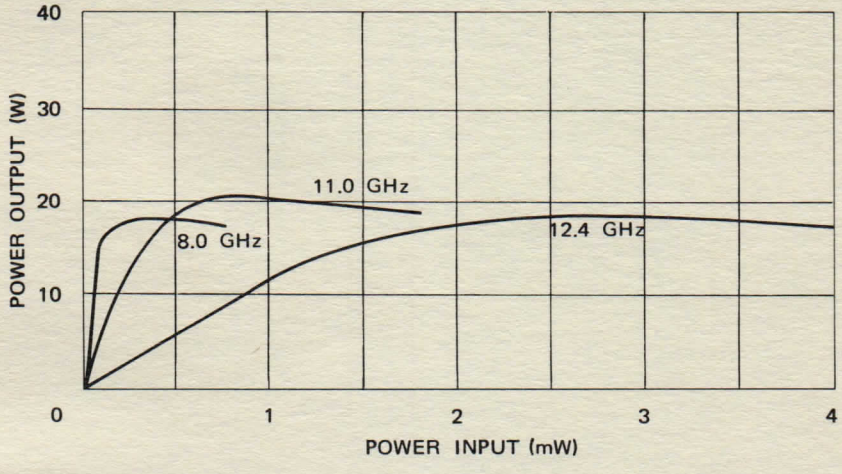

HUGHES
HUGHES AIRCRAFT COMPANY
ELECTRON DYNAMICS DIVISION 3100 West Lomita Boulevard, Torrance, California 90509, Tel (213) 534-2121

Printed in U.S.A. 9-73

848HD

Ku-band 10W TWT Supplemental Data

HUGHES

HUGHES AIRCRAFT COMPANY

ELECTRON DYNAMICS DIVISION

TYPICAL PERFORMANCE

POWER OUT AND GAIN
AT RATED OUTPUT VERSUS FREQUENCY

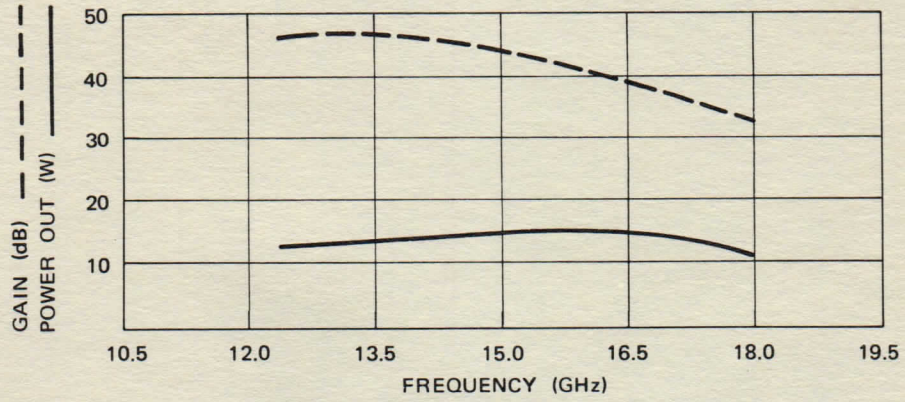

POWER OUTPUT VERSUS POWER INPUT

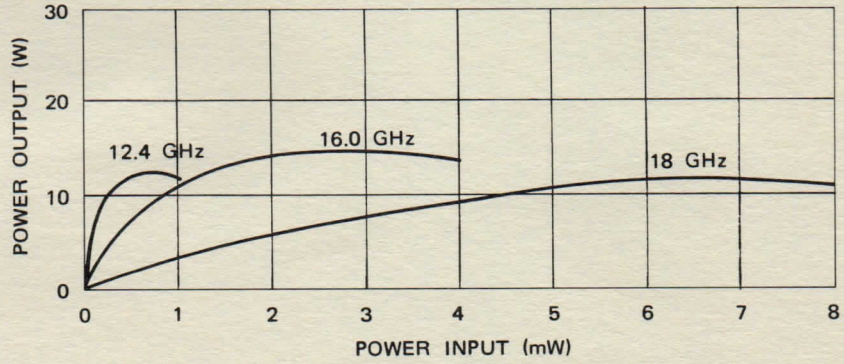

HUGHES
HUGHES AIRCRAFT COMPANY
ELECTRON DYNAMICS DIVISION 3100 West Lomita Boulevard, Torrance, California 90509, Tel (213) 534-2121

Printed in U.S.A. 9-73

OUTLINE AND MOUNTING DRAWING

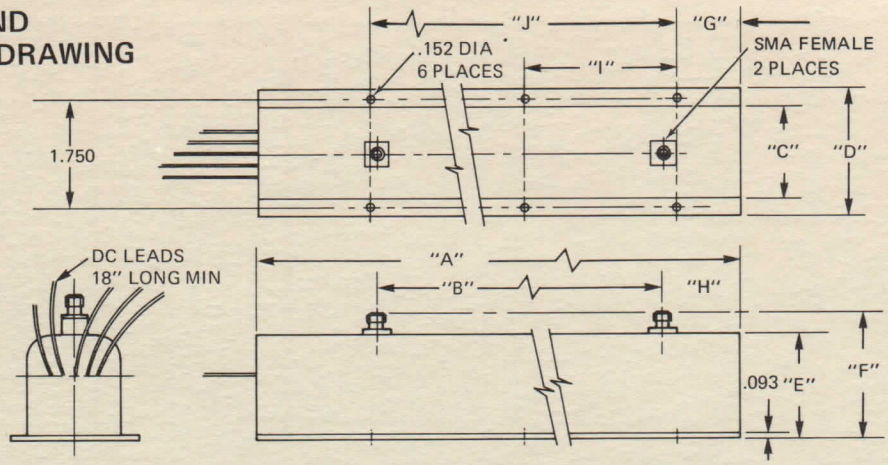

Note: Mounting surface flatness must be within .001 inch/inch and inductive thermal paste must be used.

LEAD	COLOR
HEATER CATHODE	YELLOW
ANODE	GREEN
HEATER	BROWN
HELIX	BLACK
COLLECTOR	RED

TWT	A	B	C	D	E	F	G	H	I	J
417H	13.00	9.20	1.80	2.25	2.00	3.50	2.50	1.30	4.00	8.00
564H	9.50	5.57	1.38	2.00	1.77	2.27	1.75	1.50	3.00	6.00
648H	9.50	5.57	1.38	2.00	1.77	2.27	1.75	1.50	3.00	6.00
771H	9.50	5.32	1.38	2.00	1.77	2.27	1.75	1.50	3.00	6.00
848H	8.50	4.60	1.38	2.00	1.77	2.27	1.25	1.50	3.00	6.00

DIMENSIONS ARE IN INCHES

BLOCK DIAGRAM

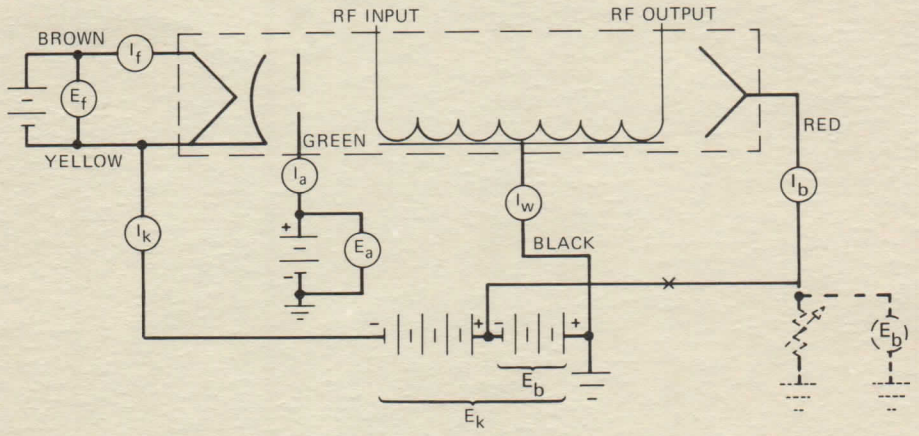

APPLICATIONS

The block diagram shows the interconnection between the tube and power supply and indicates monitoring points for voltages and currents. The configuration, as shown, is for depressed collector operation. As an alternate approach for depressed collector operation, eliminate the wire at point "X" and substitute dashed resistor. For non-depressed operation, eliminate the wire at point "X" and connect the collector lead (red) directly to ground.

EXTREME CAUTION should be taken when setting up tube voltages so as not to create an undervoltage or overvoltage condition. Power supply voltages must be within the following tolerances of name plate voltage prior to making connection to the tube: Heater ($E_f \pm 5\%$; Anode (E_a) $\pm$ 10%; Cathode (E_k) $\pm$ 2%; Collector (E_b) 0 volts to nameplate value maximum.

YOUR LOCAL REPRESENTATIVE

HUGHES
HUGHES AIRCRAFT COMPANY

ELECTRON DYNAMICS DIVISION / 3100 W. LOMITA BLVD. TORRANCE, CA.90509/TEL (213) 534-2121

Printed in U.S.A.—10-73

HUGHES

HUGHES AIRCRAFT COMPANY

ELECTRON DYNAMICS DIVISION

20 WATT SERIES COMMERCIAL TWT's

COVERING L-, S-, C-, X-, and KU-BANDS

MODEL 418H AT 1.0 - 2.0 GHz
MODEL 568H AT 2.0 - 4.0 GHz
MODEL 640H AT 4.0 - 8.0 GHz
MODEL 783H AT 8.0 - 12.4 GHz
MODEL 856H AT 12.4 - 18.0 GHz

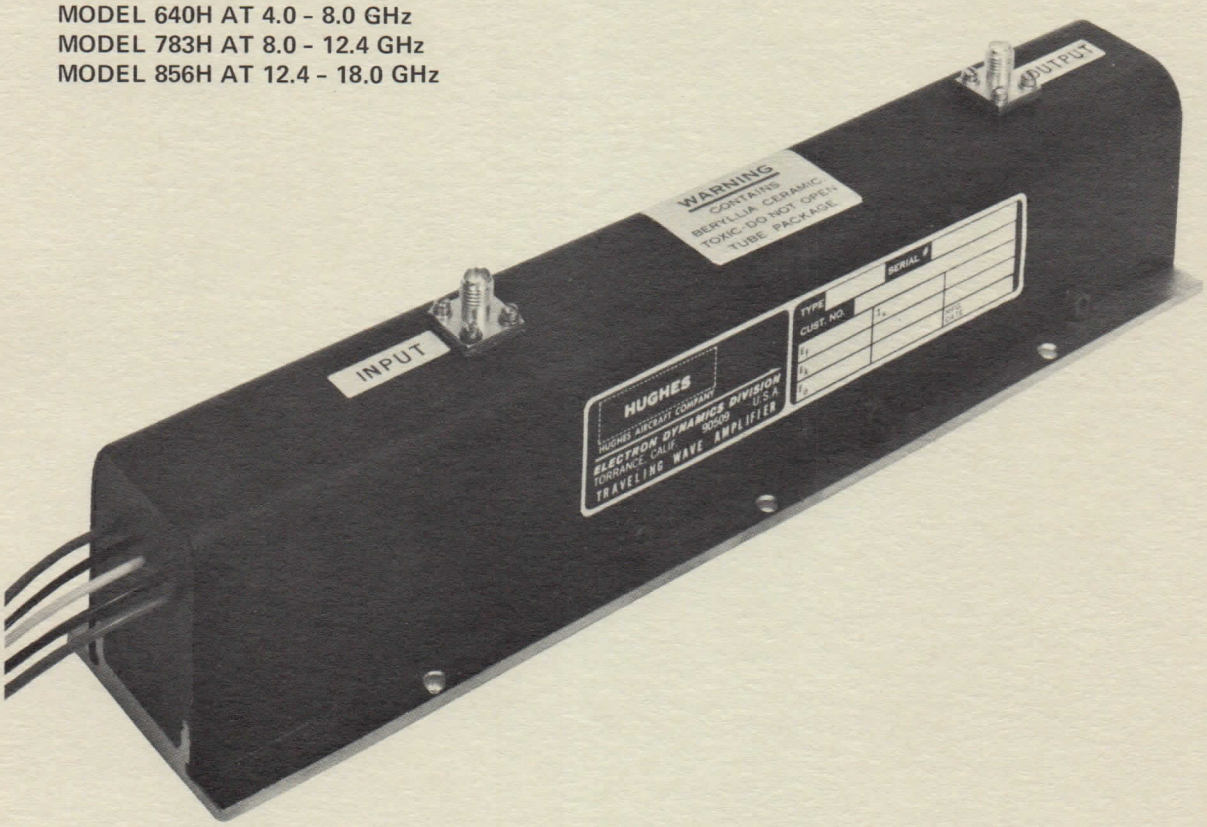

DESCRIPTION

The Hughes 20 watt traveling-wave tubes (TWT's) in this series have a wide variety of applications for laboratory testing and systems requirements. Their construction is based on the knowledge gained in the design and manufacture of the Hughes "space type" TWT's that have won world-wide recognition for their proven quality and reliability, having logged over two million hours of operation in space aboard the Surveyor, Mariner, Early Bird, Pioneer, ATS, Syncom, TACSAT, Intelsat and Apollo spacecrafts. The same facilities, technical know-how and craftsmanship is utilized in producing these commercial L-, S-, C-, X- and Ku-band TWT's. This, combined with proven reliability, allows us to warrant these TWT's for one year, regardless of the hours of operation.

SPECIFICATIONS[1]

Electrical

Model Number	Frequency (GHz)	Cathode Voltage[2] (E_k) (-Vdc)	Cathode Current (I_k) (mA maximum)	Anode Voltage[2] (E_a) (Vdc)	Anode Current (I_a) (mA maximum)	% Collector Depression[3] (max.) (% of E_k)	Helix Current[4] (I_w) (mA maximum)
418H	1.0 – 2.0	1700 ± 150	165	400	5.0	30	15.0
568H	2.0 – 4.0	1950 ± 100	120	400	1.5	30	15.0
640H	4.0 – 8.0	3225 ± 125	85	400	2.5	50	6.0
783H	8.0 – 12.4	3950 ± 150	65	400	1.0	50	6.0
856H	12.4 – 18.0	4500 ± 200	80	400	0.5	50	3.0

Electrical RF Performance

Power Output (saturated) . . . . . 20 watts minimum
Gain (at rated output) . . . . . 30 dB minimum
Heater Voltage (E_f) ± 0.3 V . . . . . 6.3 Vdc or ac
Heater Current (I_f) . . . . . 1.5 A maximum
Collector Current (I_b) . . . . . Cathode current (I_k) - Helix current (I_w)
Helix Voltage (E_w) . . . . . Ground
Noise Figure (Typical – 30 dB) . . . . . 35 dB maximum
VSWR . . . . . 3.0:1 maximum

Mechanical

Construction. . . . . Metal ceramic
Cooling . . . . . Conduction
Focusing . . . . . PPM
Weight . . . . . 3 pounds maximum[5]
Connectors (input and output). . . . . SMA[6]

Environmental

Temperature (baseplate) . . . . . 85°C maximum
Altitude . . . . . 50,000 ft.

The TWT is rugged in design and will in general meet the requirements of MIL-E-5400. Contact Hughes Electron Dynamics Division for specific requirements.

Warranty

One year – no hour limit.

[1] Specifications subject to change without notice.

[2] Voltage with respect to cathode.

[3] Percent collector depression = $E_b/E_k \times 100$, $-E_b$ = collector voltage with respect to helix.

[4] Includes body current.

[5] Model number 418H is 6.5 pounds maximum.

[6] Output connector for the 856H is WR–62 waveguide with UG–419/U flange. CAUTION: Interface should be flexible waveguide to prevent any undue stress on the tube's output.

NOTE: Power supply voltages must be within the following specified percentages of nameplate values under all conditions: Heater (E_f) ±5%; Anode (E_a) ±10%; Cathode (E_k) ±2%; Collector (E_b) ±5% of nameplate value.

418HD

L-band 20W TWT
Supplemental Data

HUGHES
HUGHES AIRCRAFT COMPANY
ELECTRON DYNAMICS DIVISION

TYPICAL PERFORMANCE

POWER OUT AND GAIN
AT RATED OUTPUT VERSUS FREQUENCY

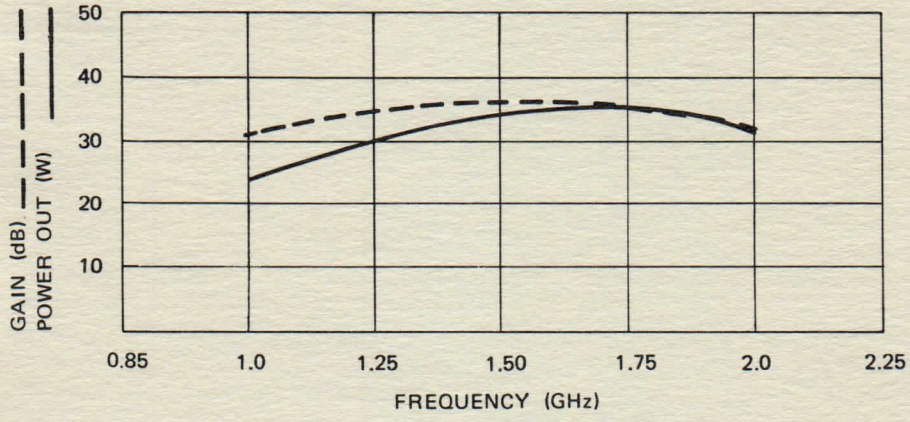

POWER OUTPUT VERSUS POWER INPUT

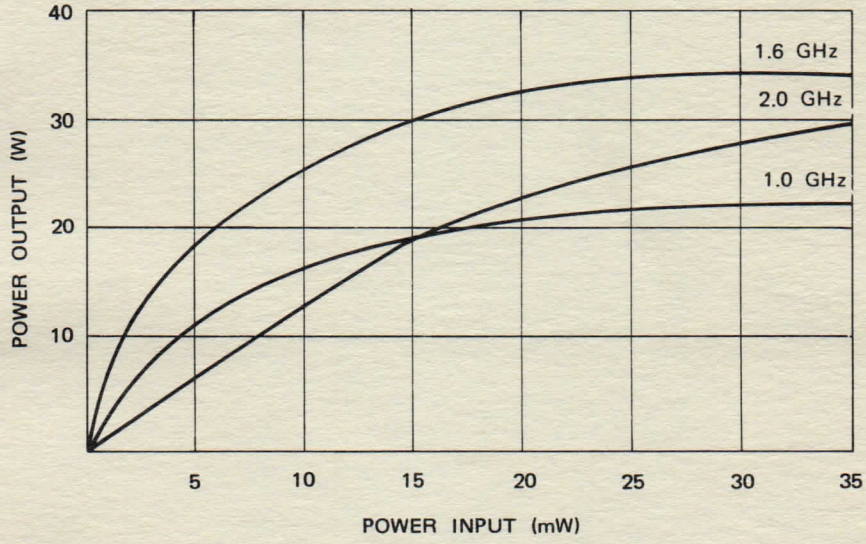

HUGHES
HUGHES AIRCRAFT COMPANY
ELECTRON DYNAMICS DIVISION 3100 West Lomita Boulevard, Torrance, California 90509, Tel (213) 534-2121

Printed in U.S.A. 9-73

568HD

S-band 20W TWT
Supplemental Data

HUGHES
HUGHES AIRCRAFT COMPANY
ELECTRON DYNAMICS DIVISION

TYPICAL PERFORMANCE

POWER OUT AND GAIN
AT RATED OUTPUT VERSUS FREQUENCY

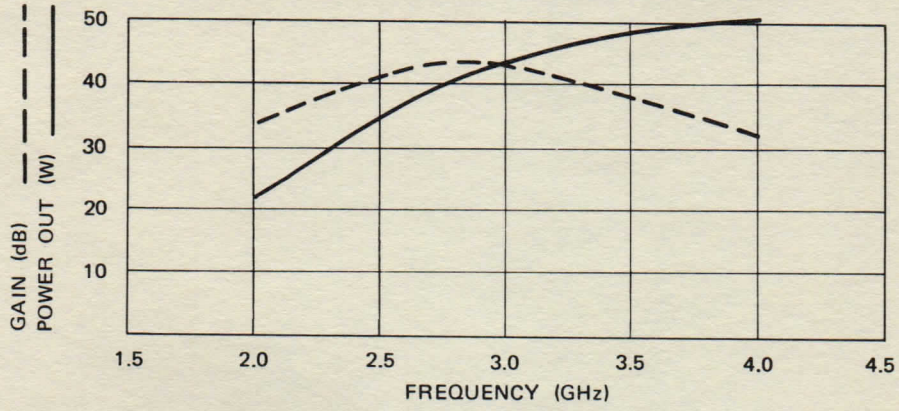

POWER OUTPUT VERSUS POWER INPUT

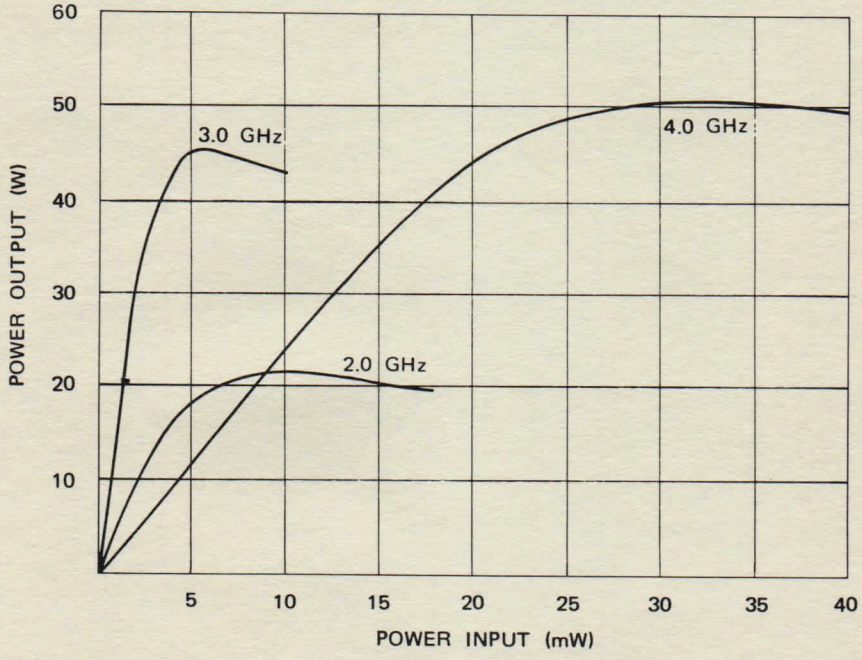

HUGHES
HUGHES AIRCRAFT COMPANY
ELECTRON DYNAMICS DIVISION 3100 West Lomita Boulevard, Torrance, California 90509, Tel (213) 534-2121

Printed in U.S.A. 9-73

640HD

C-band 20W TWT
Supplemental Data

HUGHES

HUGHES AIRCRAFT COMPANY

ELECTRON DYNAMICS DIVISION

TYPICAL PERFORMANCE

POWER OUT AND GAIN
AT RATED OUTPUT VERSUS FREQUENCY

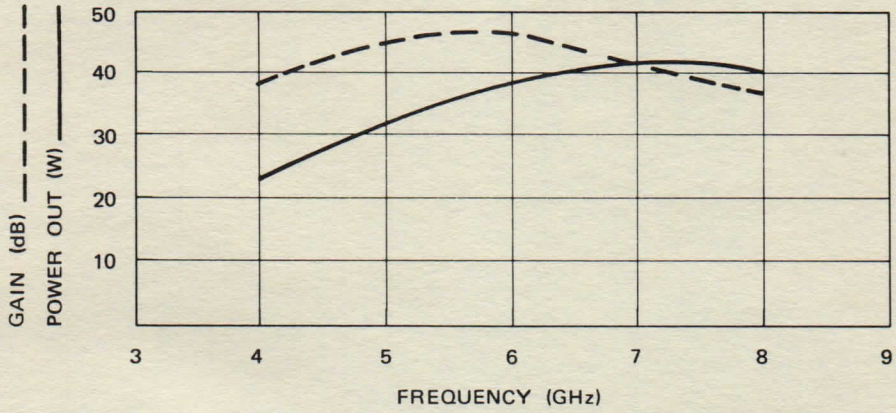

POWER OUTPUT VERSUS POWER INPUT

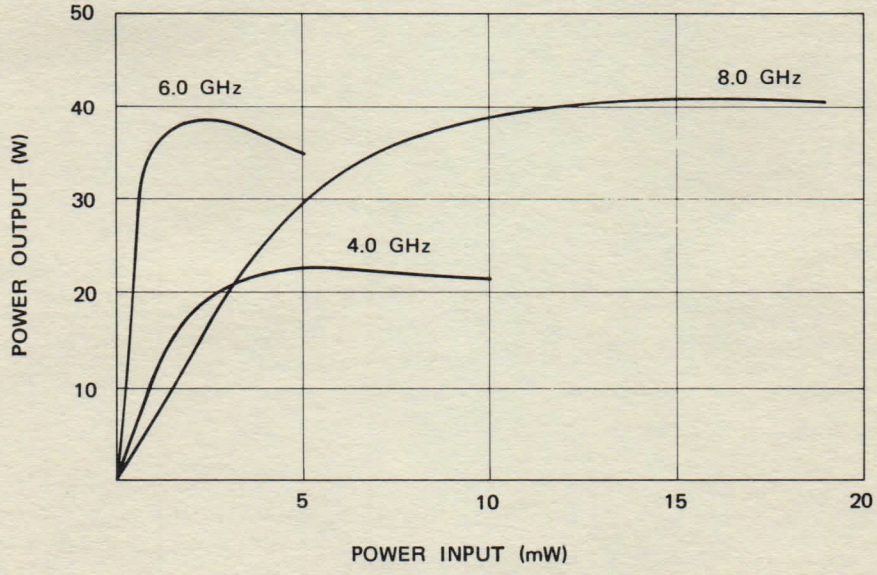

HUGHES
HUGHES AIRCRAFT COMPANY
ELECTRON DYNAMICS DIVISION 3100 West Lomita Boulevard, Torrance, California 90509, Tel (213) 534-2121

Printed in U.S.A. 9-73

783HD

X-band 20W TWT
Supplemental Data

HUGHES

HUGHES AIRCRAFT COMPANY

ELECTRON DYNAMICS DIVISION

TYPICAL PERFORMANCE

POWER OUT AND GAIN
AT RATED OUTPUT VERSUS FREQUENCY

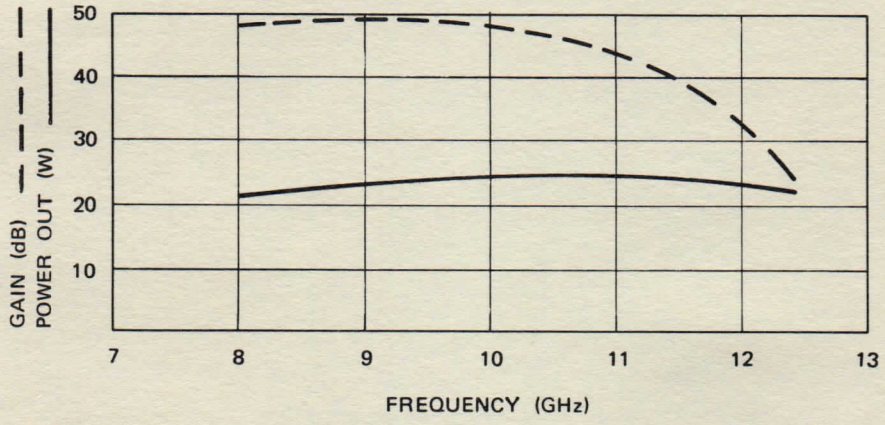

POWER OUTPUT VERSUS POWER INPUT

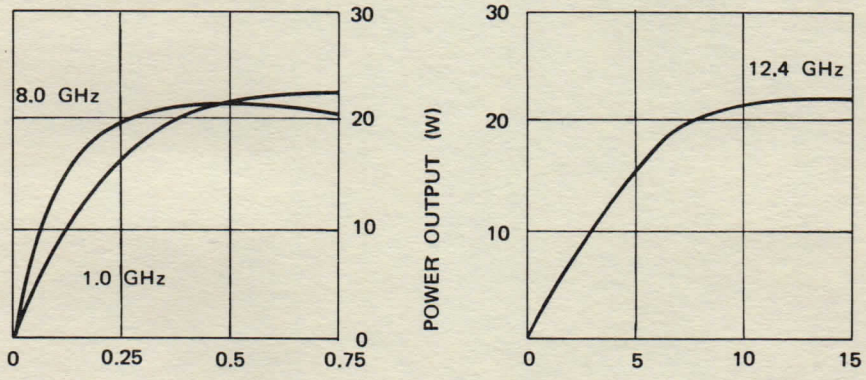

HUGHES
HUGHES AIRCRAFT COMPANY
ELECTRON DYNAMICS DIVISION 3100 West Lomita Boulevard, Torrance, California 90509, Tel (213) 534-2121

Printed in U.S.A. 9-73

856HD

Ku-band 20W TWT
Supplemental Data

HUGHES

HUGHES AIRCRAFT COMPANY

ELECTRON DYNAMICS DIVISION

TYPICAL PERFORMANCE

POWER OUT AND GAIN
AT RATED OUTPUT VERSUS FREQUENCY

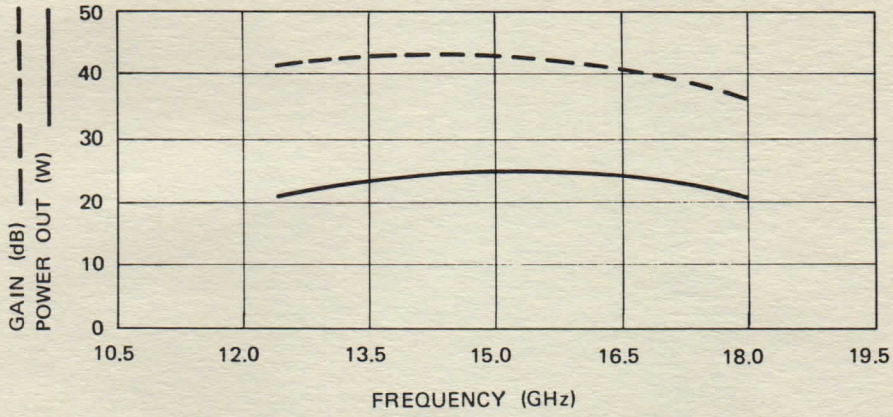

HUGHES
HUGHES AIRCRAFT COMPANY
ELECTRON DYNAMICS DIVISION 3100 West Lomita Boulevard, Torrance, California 90509, Tel (213) 534-2121

Printed in U.S.A. 9-73

OUTLINE AND MOUNTING DRAWING

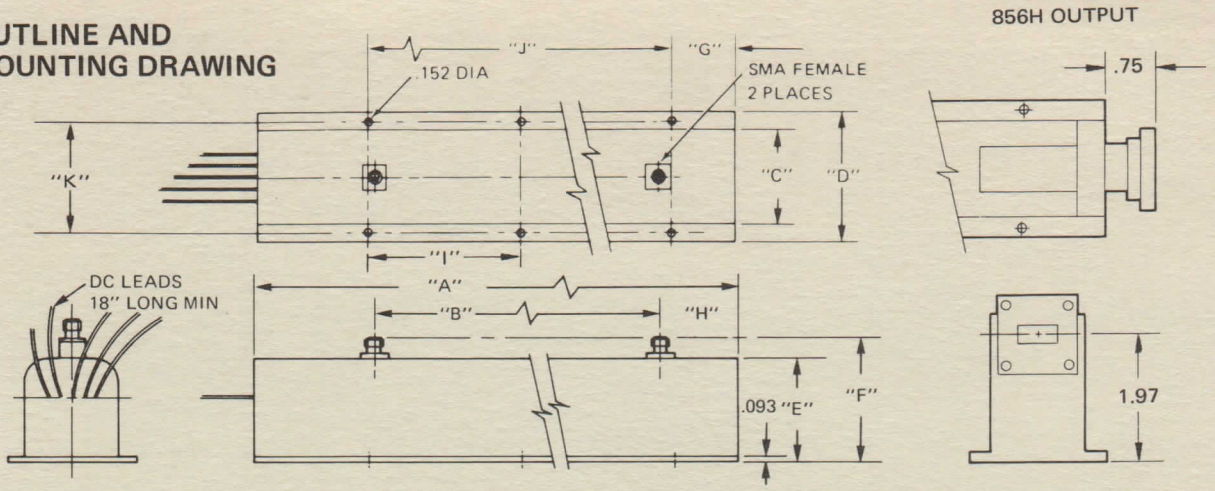

Note: Mounting surface flatness must be within .001 inch/inch and inductive thermal paste must be used.

LEAD	COLOR
HEATER CATHODE	YELLOW
ANODE	GREEN
HEATER	BROWN
HELIX	BLACK
COLLECTOR	RED

TWT	A	B	C	D	E	F	G	H	I	J	K
418H	16.00	11.46	1.80	2.25	2.00	3.50	1.50	2.00	3.25	13.00	2.05
568H	9.50	5.57	1.38	2.00	1.77	2.27	1.75	1.50	3.00	6.00	1.75
640H	10.00	6.05	1.38	2.00	1.77	2.27	2.00	1.50	3.00	6.00	1.75
783H	9.50	5.32	1.38	2.00	1.77	2.27	1.75	1.50	3.00	6.00	1.75
856H	8.50		1.38	2.00	1.80	2.30	1.25		3.00	6.00	1.75

DIMENSIONS ARE IN INCHES

BLOCK DIAGRAM

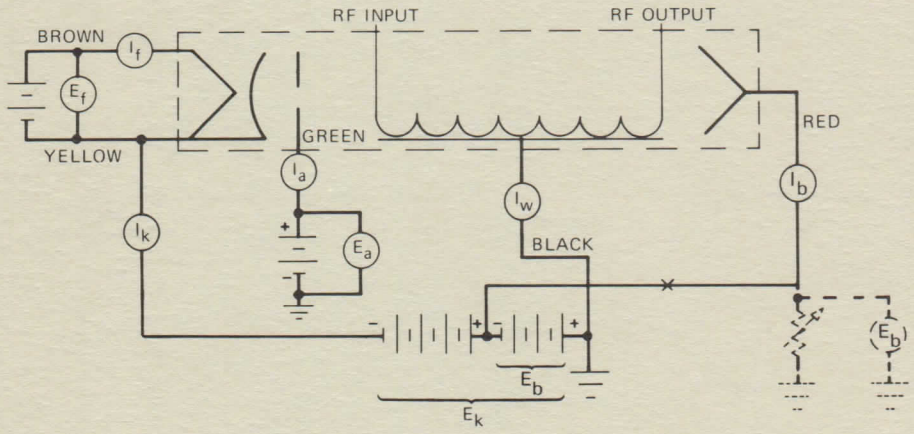

APPLICATIONS

The block diagram shows the interconnection between the tube and power supply and indicates monitoring points for voltages and currents. The configuration, as shown, is for depressed collector operation. As an alternate approach for depressed collector operation, eliminate the wire at point "X" and substitute dashed resistor. Depressed collector operation must be used.

EXTREME CAUTION should be taken when setting up tube voltages so as not to create an undervoltage or overvoltage condition. Power supply voltages must be within the following tolerances of name plate voltage prior to making connection to the tube: Heater ($E_f \pm 5\%$; Anode (E_a) $\pm$ 10%; Cathode (E_k) $\pm$ 2%; Collector (E_b) $\pm$ 5% of nameplate value.

YOUR LOCAL REPRESENTATIVE

HUGHES
HUGHES AIRCRAFT COMPANY

ELECTRON DYNAMICS DIVISION / 3100 W. LOMITA BLVD. TORRANCE, CA.90509/TEL (213) 534-2121

Printed in U.S.A. — 2-74

HUGHES

HUGHES AIRCRAFT COMPANY

ELECTRON DYNAMICS DIVISION

173H

100 W CW X-band Klystron Amplifier

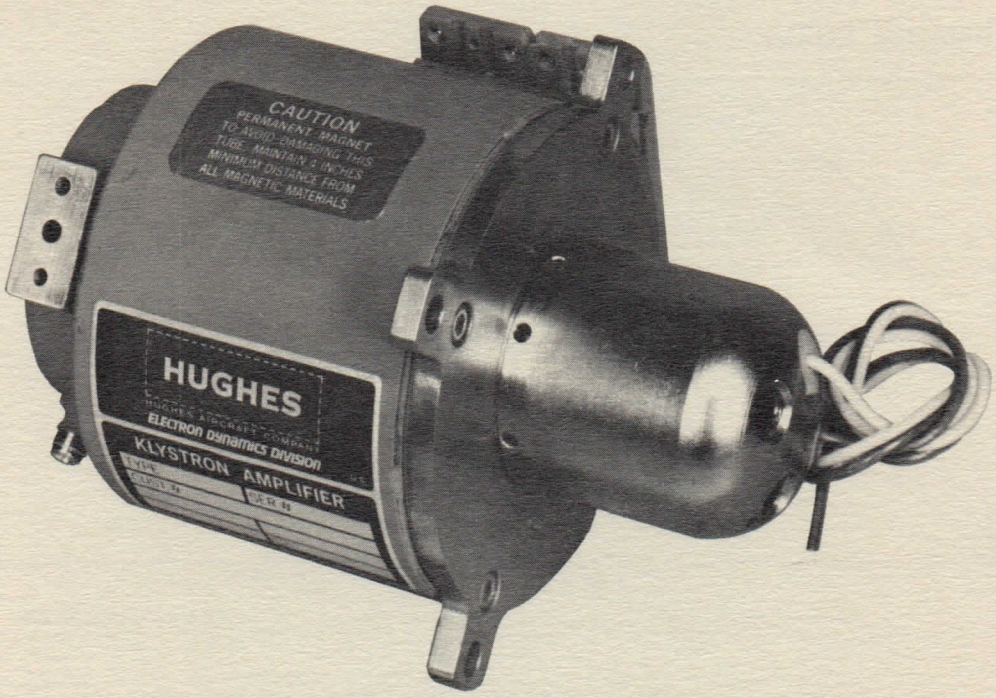

DESCRIPTION

The 173H is a compact, light-weight power amplifier designed for operation in airborne and missile environments. It has high efficiency and high gain. 100 watts CW power is attained in this light-weight, permanent magnet focused Klystron. Low noise under extreme vibration conditions is achieved by rugged metal-ceramic construction.

SPECIFICATIONS*

Frequency - Fixed Tuned	X-band
RF Output Power	100 W
Duty Cycle	CW
Gain	30 dB
RF Connectors	½ height WR-90 waveguide
Beam Voltage	-3.0 kV
Beam Current	0.164 A
Heater Voltage (nominal)	5.0 V
Heater Current (nominal)	1.6 A
Weight	4.25 pounds (1.93 kg)
Size	3" (7.62 cm) x 5" (12.70 cm)
Cooling	liquid

*All specifications are subject to change without prior notice.

173H

100 W CW X-band Klystron Amplifier

HUGHES

HUGHES AIRCRAFT COMPANY

ELECTRON DYNAMICS DIVISION

PERFORMANCE CURVE

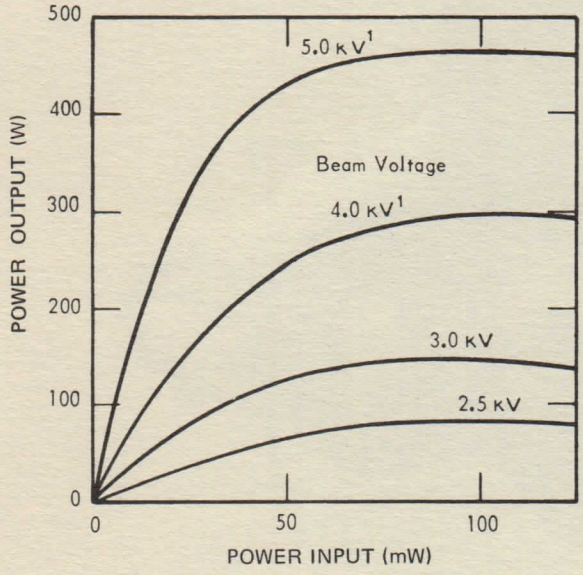

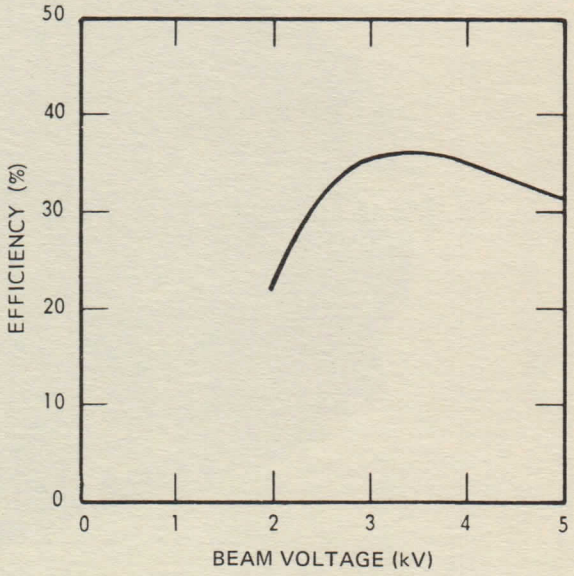

OUTLINE DRAWING

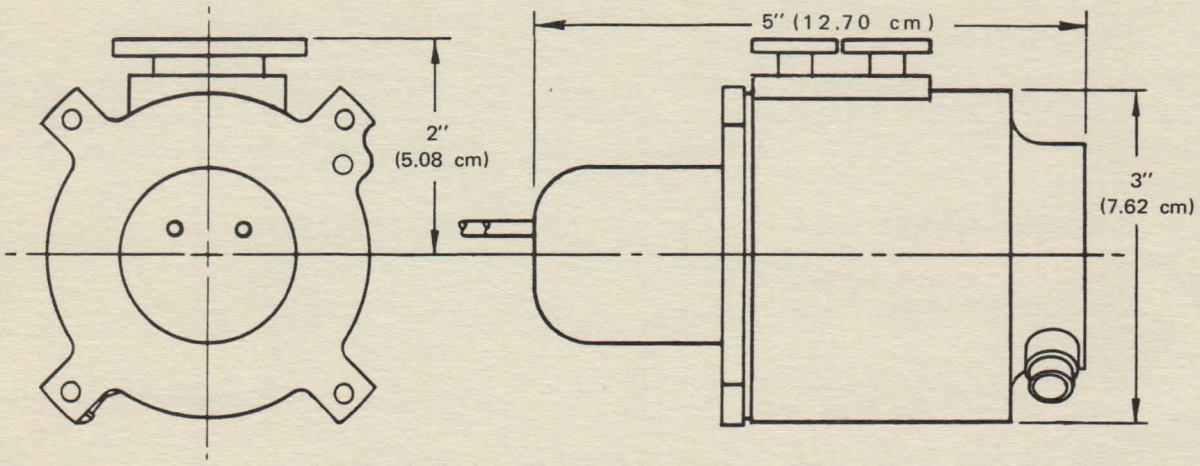

HUGHES ELECTRON DYNAMICS DIVISION MICROWAVE TRAVELING-WAVE TUBE PRODUCTS 3100 West Lomita Boulevard, Torrance, California 90509, Tel (213) 534-2121

HUGHES AIRCRAFT COMPANY

Printed in U.S.A. 7-75

HUGHES

ELECTRON DYNAMICS DIVISION

214H

8W 2.2-2.4 GHz CW TWT

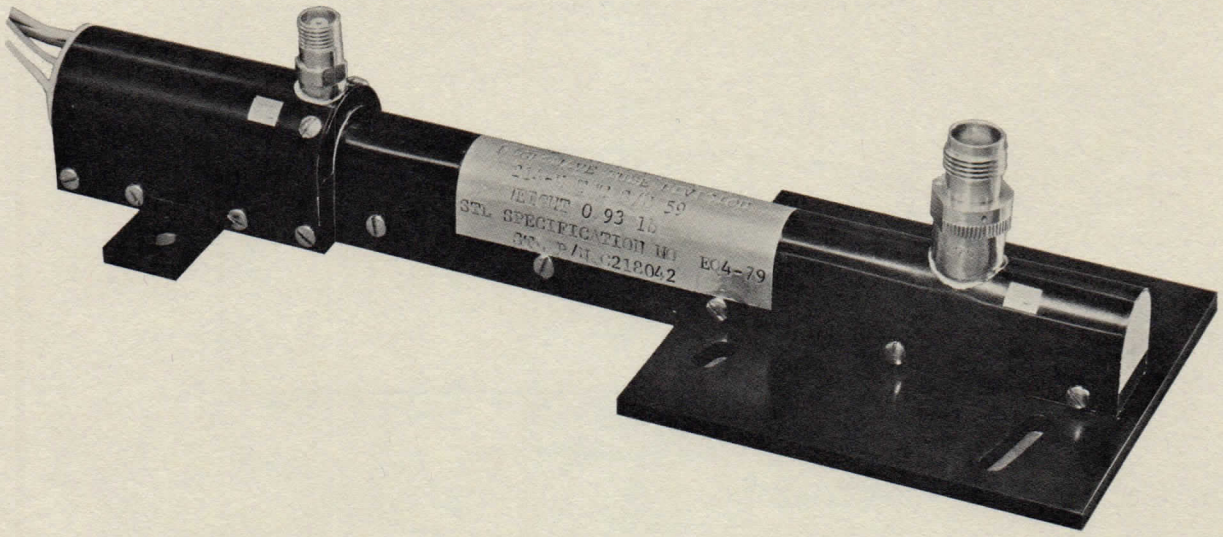

DESCRIPTION

The 214H is a lightweight, high efficiency TWT designed for space applications. Current missions include the Pioneer Sun Probe.

SPECIFICATIONS

Frequency	2.2 - 2.4 GHz
Power Output	8.0 W
Duty Cycle	CW
Gain Saturated	27 dB
Efficiency	35%(1)
Beam Voltage	930 V(2)
Beam Current	40 mA
Helix Current	0-6 mA
Anode Voltage	1030 V(3)
Anode Current	0.3 mA
Collector Voltage	530 V(3)
Collector Current	34-40 mA
Heater Voltage	4.9 V
Heater Current	280 mA
Construction	Metal Ceramic
Cooling	Convection
Focusing	PPM
Weight	15 Ounces
Length	8.26 Inches
Expected Life	40,000 Hours

(1) Midband efficiency including heater power.
(2) Voltages with respect to cathode.
(3) Anode and collector may be operated at helix voltage.

214H

8W 2.2-2.4 GHz CW TWT

HUGHES

ELECTRON DYNAMICS DIVISION

PERFORMANCE CURVE

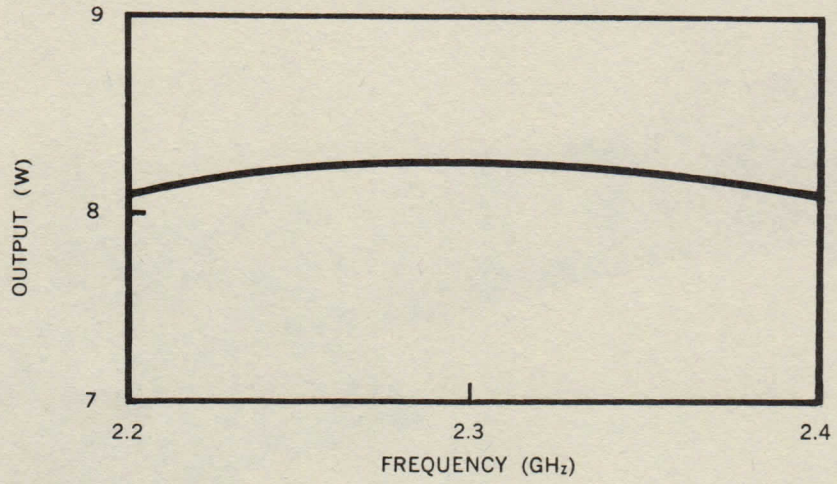

OUTLINE AND MOUNTING DRAWING

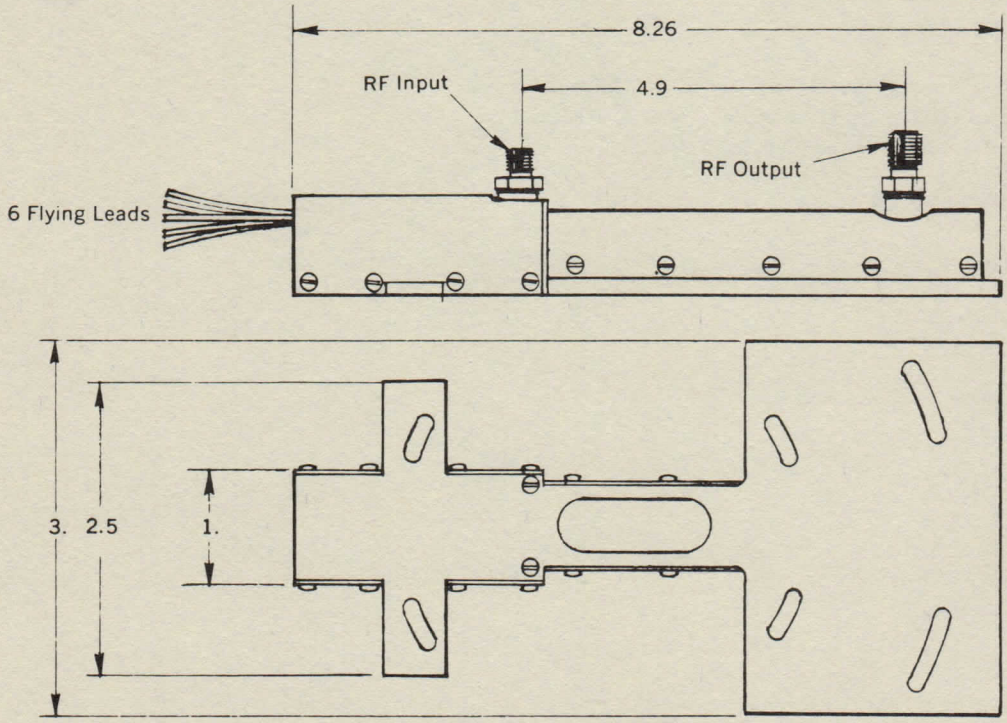

These data are typical values. Operating instructions and electrical characteristics can be obtained upon request.

YOUR LOCAL REPRESENTATIVE

HUGHES
HUGHES AIRCRAFT COMPANY

ELECTRON DYNAMICS DIVISION / 3100 W. LOMITA BLVD. TORRANCE, CA. 90509 / TEL (213) 534-2121

Printed in U.S.A.—11—71

HUGHES

ELECTRON DYNAMICS DIVISION

219H

20W 8-9 GHz CW TWT

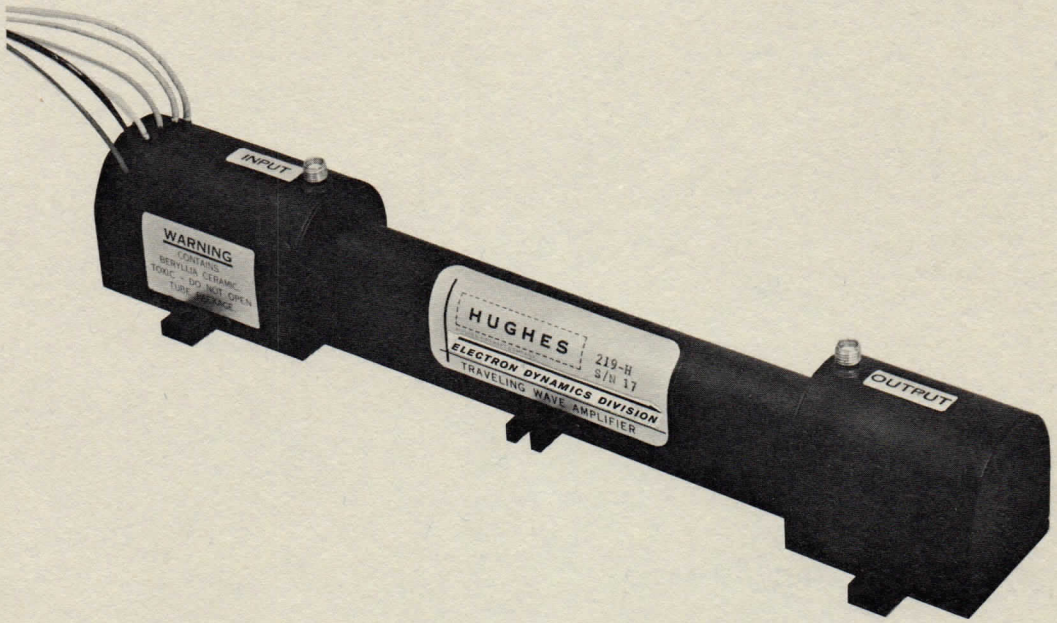

DESCRIPTION

The 219H is a small, lightweight, high efficiency, metal ceramic tube developed for space applications. This tube was developed for NASA/Langley and was space qualified by NASA.

SPECIFICATIONS

Frequency	8-9 GHz
Power Output (saturation)	20 W
Duty	CW
Gain (saturation)	40 dB
Efficiency	30%
Beam Voltage	-3400 V
Beam Current	40 mA
Anode Voltage	100 V
Anode Current	0.15 mA
Helix Current	2 mA
Collector Voltage	-1800 V
Heater Voltage	5.2 V
Heater Current	410 mA
Construction	Metal Ceramic
Cooling	Conduction
Focusing	PPM
Weight	24 Ounces
Length	10.5 Inches
Connector	OSM Female
Expected Life	>100,000 Hours

219H

20W 8-9 GHz CW TWT

HUGHES

ELECTRON DYNAMICS DIVISION

PERFORMANCE CURVE

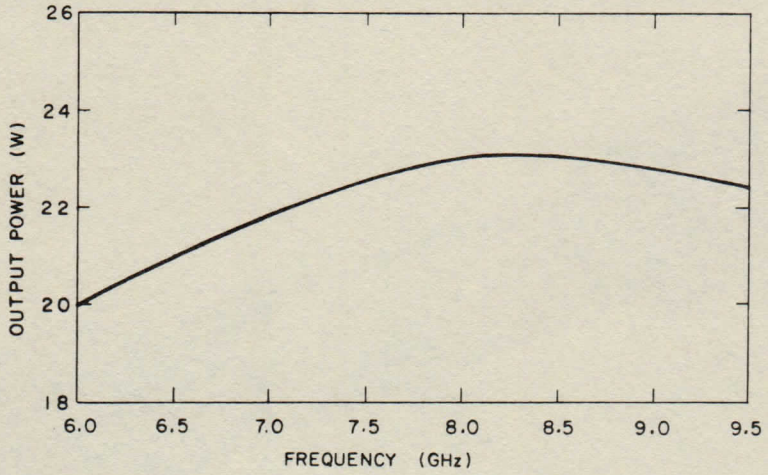

OUTLINE AND MOUNTING DRAWING

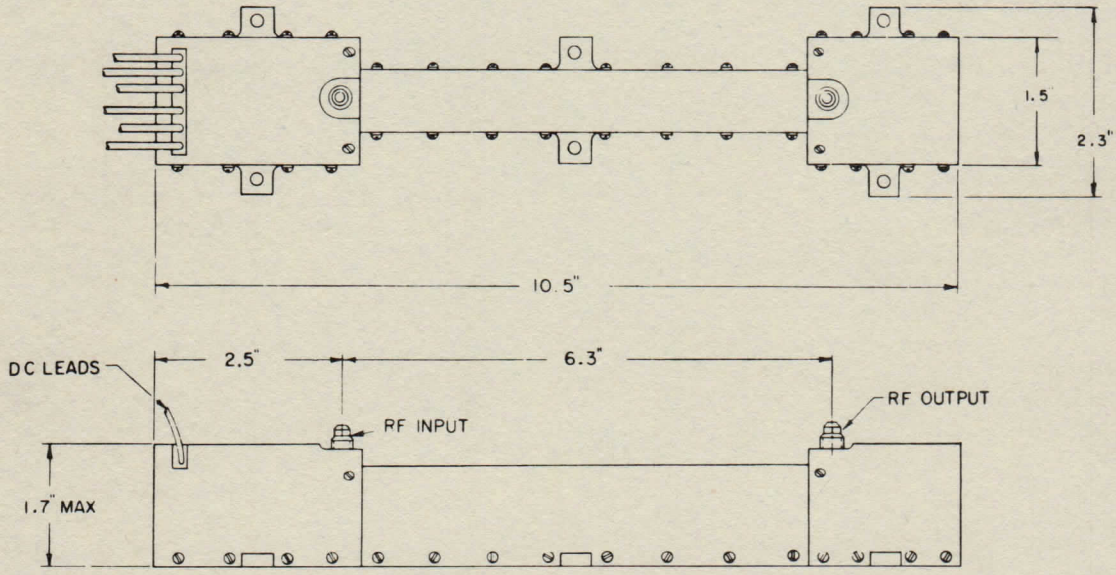

These data are typical values. Operating instructions and electrical characteristics can be obtained upon request.

YOUR LOCAL REPRESENTATIVE

HUGHES
HUGHES AIRCRAFT COMPANY

ELECTRON DYNAMICS DIVISION / 3100 W. LOMITA BLVD. TORRANCE, CA. 90509 / TEL (213) 534-2121

Printed in U.S.A.—11—71

HUGHES

HUGHES AIRCRAFT COMPANY

ELECTRON DYNAMICS DIVISION

230H

5.5 W 3.7–4.2 GHz CW TWT

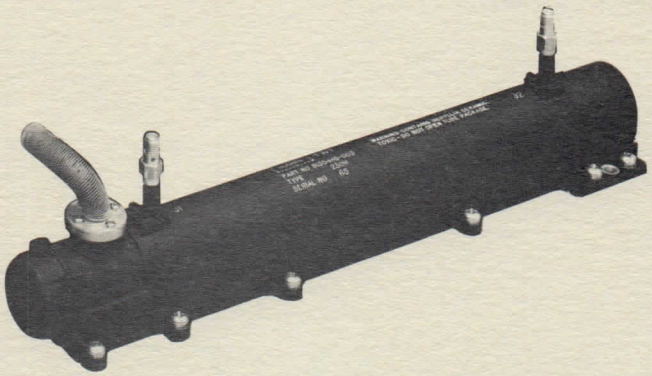

DESCRIPTION

The Hughes Model 230H traveling-wave tube is a space qualified tube built for the Tracking and Data Relay Satellite System. The tube features a ruggedized package and is designed for a minimum life of 10 years. This tube is utilized in the 1264H TWTA.

SPECIFICATIONS*

RF PARAMETERS

Frequency	3.7 - 4.2 GHz
Power Output	5.5 W
Duty	CW
Saturated Gain	55 dB
Efficiency	35%

ELECTRICAL

Beam Voltage	−1340 V
Beam Current	23.5 mA
Anode Voltage	200 V
Anode Current	0.01 mA
Heater Voltage	4.5 V
Heater Current	265 mA

MECHANICAL

Construction	metal ceramic
Cooling	conduction
Focusing	PPM
Weight	25 ounces (0.7 kg)
Length	12.35 inches (31.37 cm)
Connectors	SMA female
Expected Life	10 years

*Specifications subject to change without prior notice.

230H

5.5 W 3.7–4.2 GHz CW TWT

HUGHES

HUGHES AIRCRAFT COMPANY

ELECTRON DYNAMICS DIVISION

TYPICAL PERFORMANCE CURVE

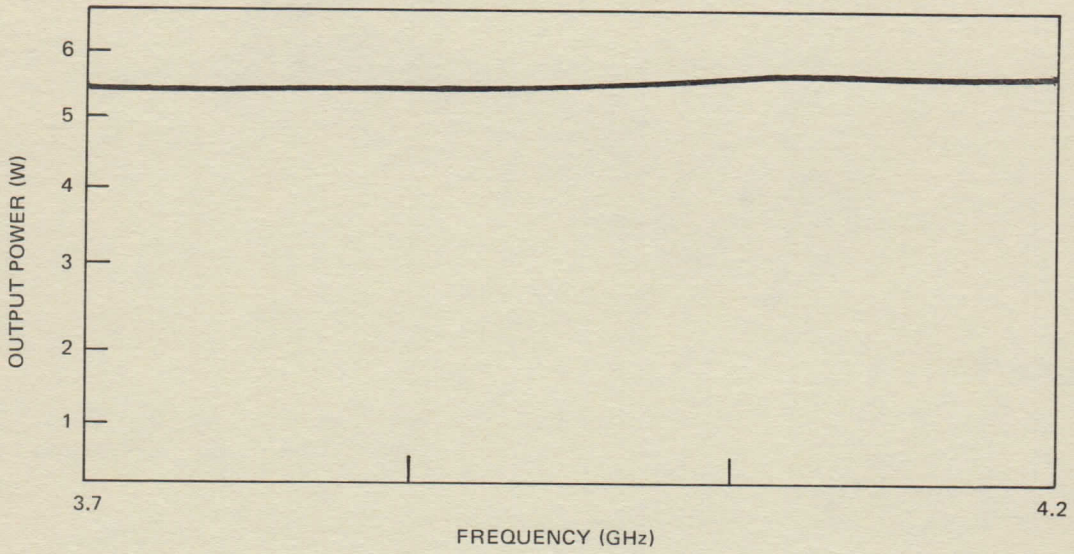

OUTLINE DRAWING

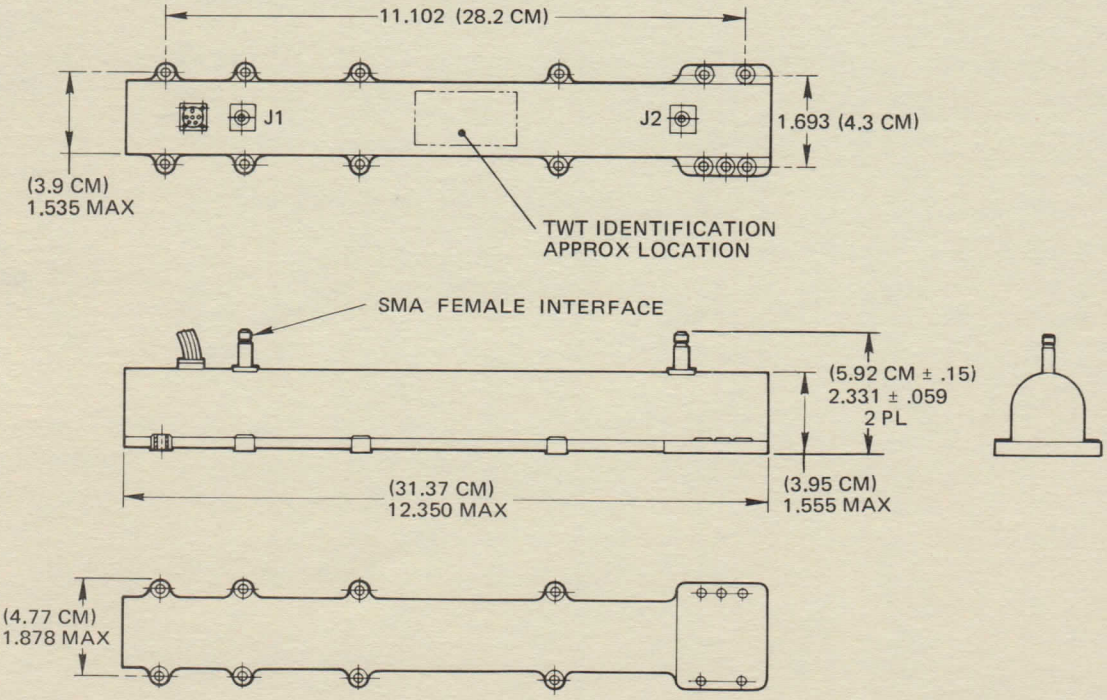

HUGHES
HUGHES AIRCRAFT COMPANY
ELECTRON DYNAMICS DIVISION 3100 West Lomita Boulevard, Torrance, California 90509, Tel (213) 534-2121

PRINTED IN U.S.A. 2/79 AL

HUGHES

HUGHES AIRCRAFT COMPANY

ELECTRON DYNAMICS DIVISION

240H

20W 6-9 GHz CW TWT

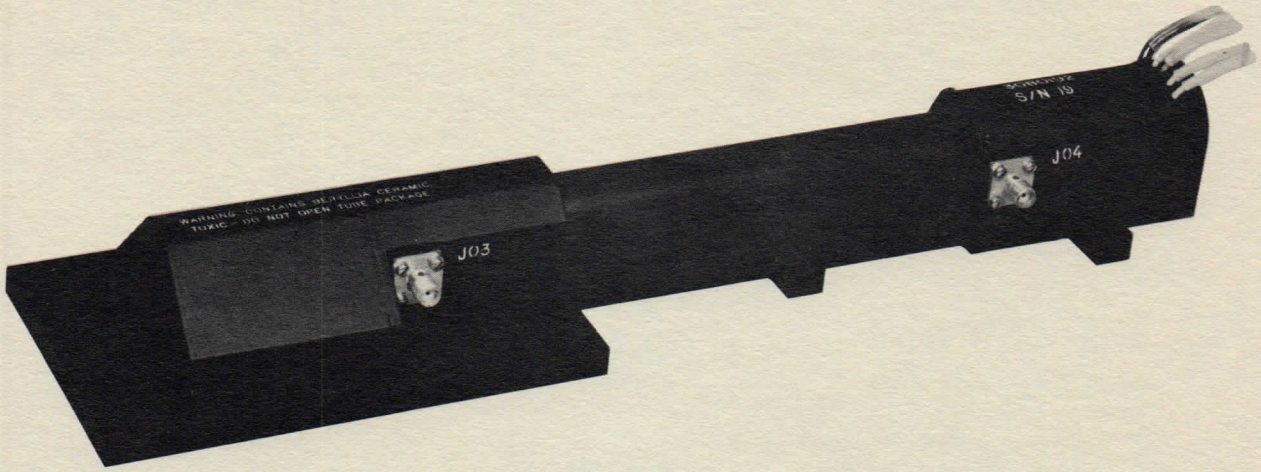

DESCRIPTION

The 240H is a lightweight, rugged, high efficiency, metal ceramic tube designed for space applications. This traveling wave-tube was developed for the Military Tactical Communication Satellite (TACSAT).

SPECIFICATIONS

Frequency	6-9 GHz
Power Output (Saturation)	20 W
Duty	CW
Gain (Saturation)	40 dB
Efficiency	33%
Beam Voltage	3400 V
Beam Current	42 mA
Anode Voltage	150 V
Anode Current	0.1 mA
Collector Voltage	-1950 V
Collector Current	40 mA
Heater Voltage	5.2 V
Heat Current	403 mA
Construction	Metal Ceramic
Cooling	Conduction
Focusing	PPM
Weight	44 Ounces*
Length	12.3 Inches
Connectors	OSM Female
Expected Life	>100,000 Hours

*Weight can be reduced to 30 ounces with a different package configuration.

240H

20W 6-9 GHz CW TWT

HUGHES

HUGHES AIRCRAFT COMPANY

ELECTRON DYNAMICS DIVISION

PERFORMANCE CURVE

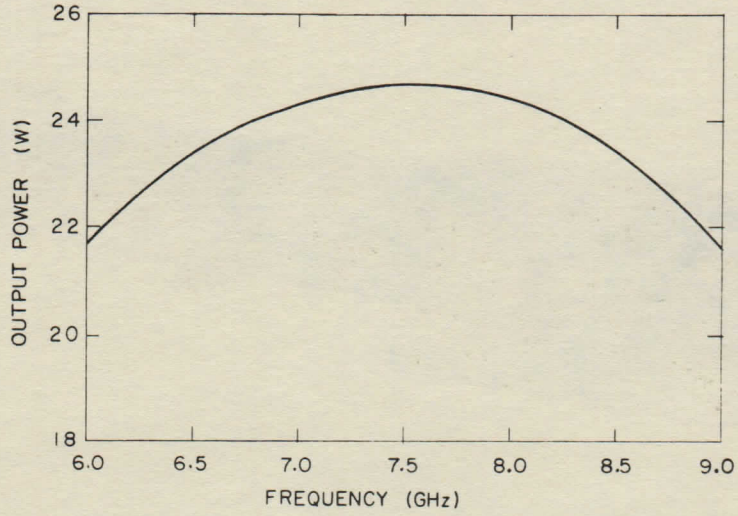

OUTLINE AND MOUNTING DRAWING

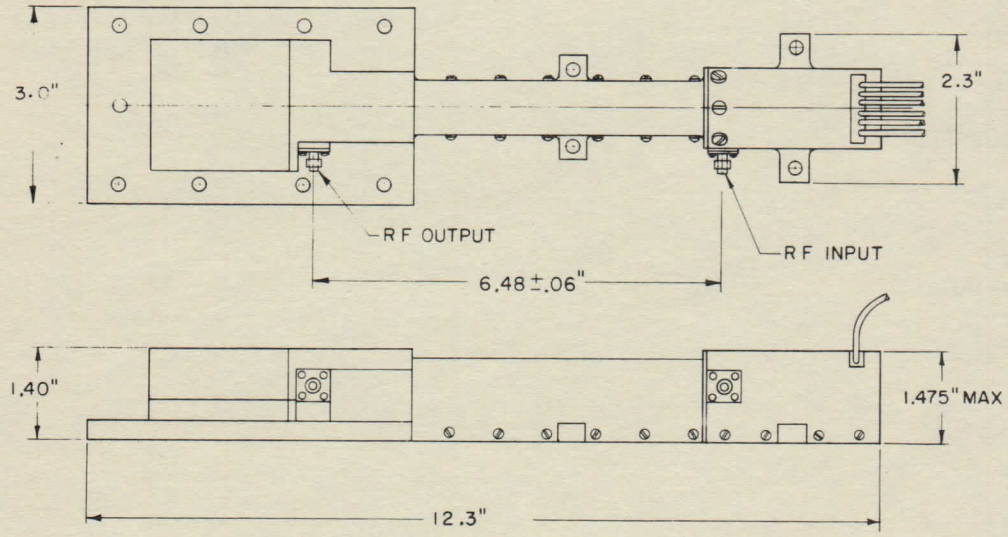

These data are typical values. Operating instructions and electrical characteristics can be obtained upon request.

YOUR LOCAL REPRESENTATIVE

HUGHES
HUGHES AIRCRAFT COMPANY
ELECTRON DYNAMICS DIVISION / 3100 W. LOMITA BLVD. TORRANCE, CA. 90509 / TEL (213) 534-2121

Printed in U.S.A.—11—71

HUGHES

HUGHES AIRCRAFT COMPANY

ELECTRON DYNAMICS DIVISION

246H 8510H 8511H

11.5 W 7.5 W 9.6 W

3.7 - 4.2 GHz CW TWT

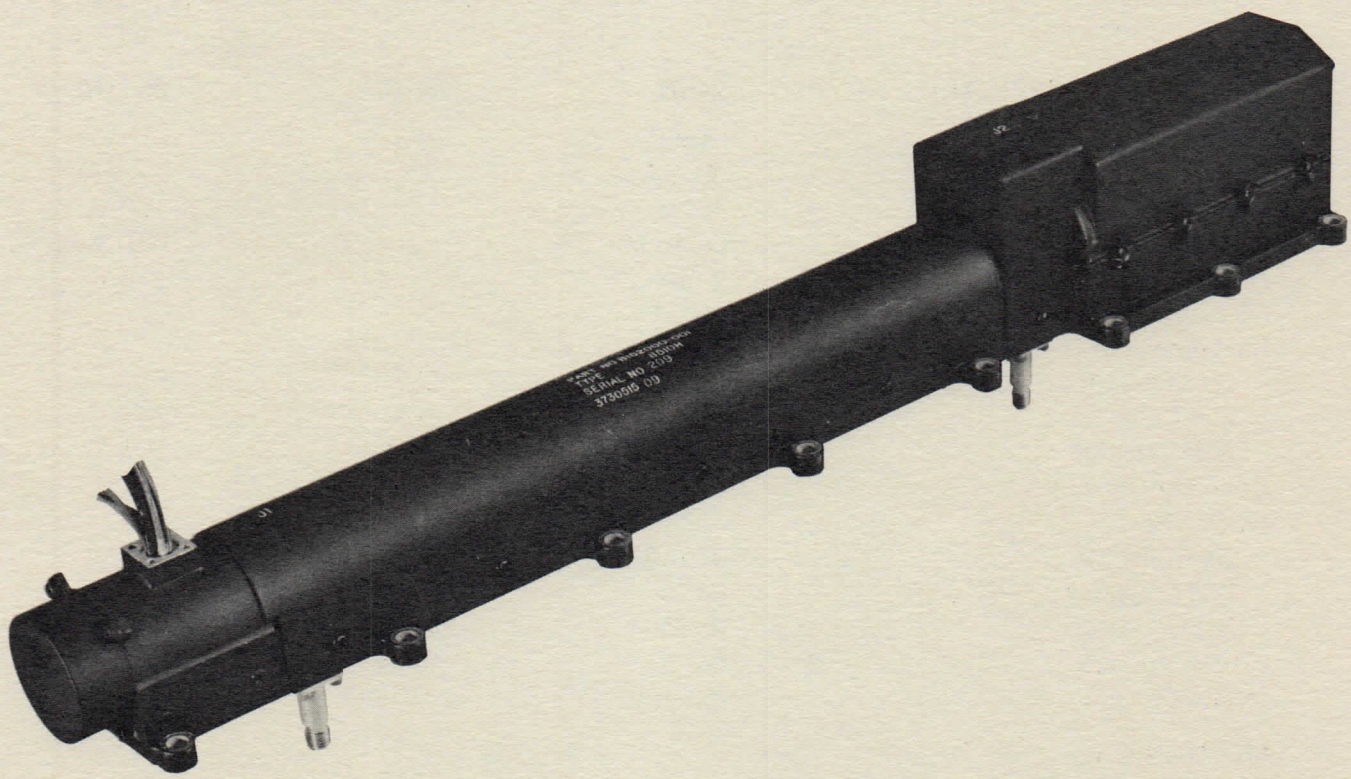

DESCRIPTION

The Hughes Models 246H, 8510H, and 8511H TWTs are designed and built utilizing the same external package to meet the stringent requirements of the Anik D, Westar and Palapa Communication Satellite programs. The advanced high efficiency, triply depressed collector design incorporates a grounded outershell that contains the high depression voltages within the vacuum while maintaining excellent thermal dissipation characteristics. The metal-ceramic construction of this tube provides a light-weight, rugged package for space applications. The long life and RF performance characteristics make these TWTs well suited for use in high reliability, communication satellites.

SPECIFICATIONS*

RF PARAMETERS

Frequency	3.7 – 4.2 GHz
Output Power	
246H	11.5 watts (minimum)
8510H	7.5 watts (minimum)
8511H	9.6 watts (minimum)
Duty	CW
Saturated Gain	56 dB (typical)
Efficiency	44% (typical)
Noise Figure	30 dB (maximum)
Gain Ripple	0.2 dB pk to pk/36 MHz (typical)
AM/PM Conversion	3.3°/dB (typical)

ELECTRICAL (TYPICAL)	246H	8510H	8511H
Beam Voltage	-1650	-1370	-1530
Beam Current	39 mA	29 mA	34 mA
Anode Voltage	150V	150 V	150 V
Anode Current	0.01 mA	0.01 mA	0.01 mA
Helix Current	2 mA	2 mA	2 mA
Collector Depression (percentage of beam voltage)			
1st Collector	55%	55%	55%
2nd Collector	70%	70%	70%
3rd Collector	90%	90%	90%
Collector Currents (with RF)			
1st Collector	23 mA	18 mA	20 mA
2nd Collector	9 mA	5 mA	8 mA
3rd Collector	5 mA	5 mA	5 mA
Heater Voltage	5.3 V	5.3 V	5.3 V
Heater Current	375 mA	375 mA	375 mA

MECHANICAL

Construction	metal-ceramic
Cooling	conduction
Focusing	PPM with $SmCo_5$
Weight	2 pounds maximum (0.91 kg)
Length	15.5 inches (39.37 cm)
Width (at collector)	2.5 inches (6.35 cm)
Height (including connectors)	3.25 inches (8.255 cm)
Connectors	
RF	SMA female
DC	flying leads
Expected Life	> 10 years

ENVIRONMENTAL

These tubes are designed and constructed to meet environmental conditions typical of spacecraft launch and orbit environments.

*All specifications subject to change without prior notice.

TYPICAL DATA

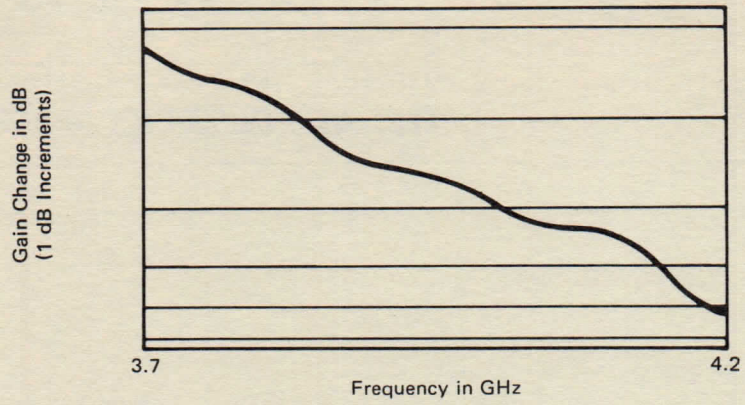

SMALL SIGNAL GAIN VARIATION VERSUS FREQUENCY

Typical Data: Small Signal Gain Slope < 0.015 dB/MHz Over Any One 36 MHz Channel

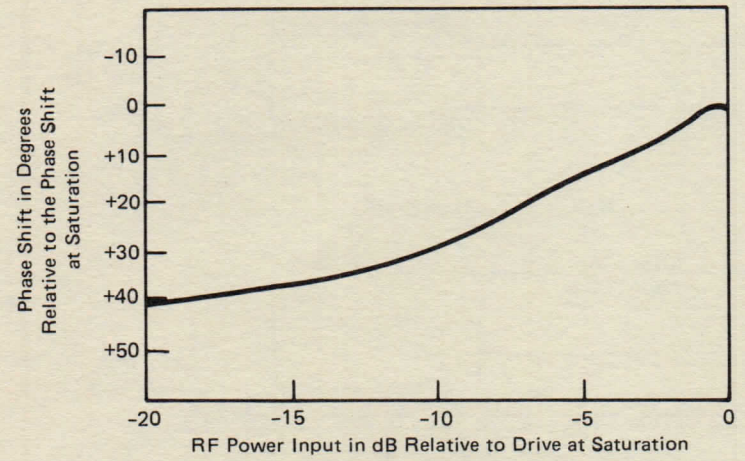

PHASE SHIFT RELATIVE TO RF DRIVE TO SATURATE

Typical Data: $< 3.5^{\circ}$/dB

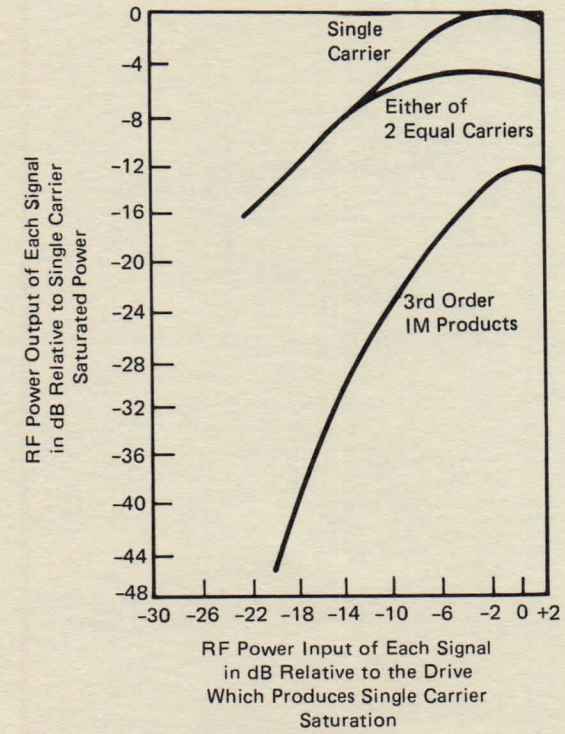

THIRD ORDER INTERMODULATION PRODUCT (3_{IM}) AS A FUNCTION OF RF POWER INPUT

Typical Data:

RF Drive		$C/3_{IM}$
-3 dB	>	11 dB
-10 dB	>	16 dB
-17 dB	>	26 dB

246H 8510H 8511H
11.5 W 7.5 W 9.6 W

3.7 - 4.2 GHz CW TWT

HUGHES
HUGHES AIRCRAFT COMPANY
ELECTRON DYNAMICS DIVISION

OUTLINE DRAWING FOR 246H, 8510H AND 8511H TWTS

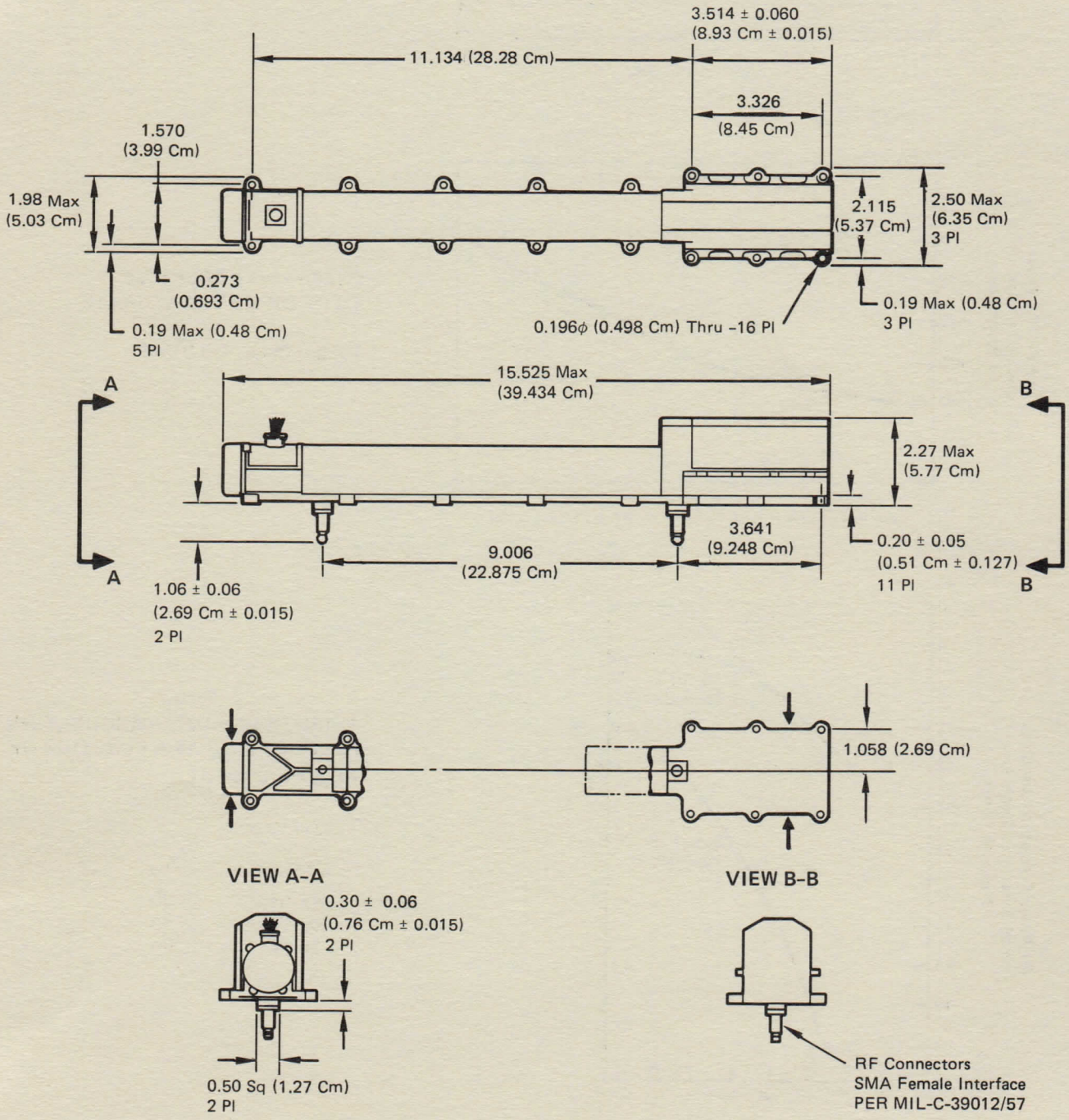

HUGHES HUGHES AIRCRAFT COMPANY **ELECTRON DYNAMICS DIVISION** 3100 West Lomita Boulevard, P.O. Box 2999, Torrance, California 90509, Tel (213) 517-6000

Printed in U.S.A. 2/81 A/L

HUGHES

HUGHES AIRCRAFT COMPANY

ELECTRON DYNAMICS DIVISION

254H

2W 24-36 GHz CW TWT

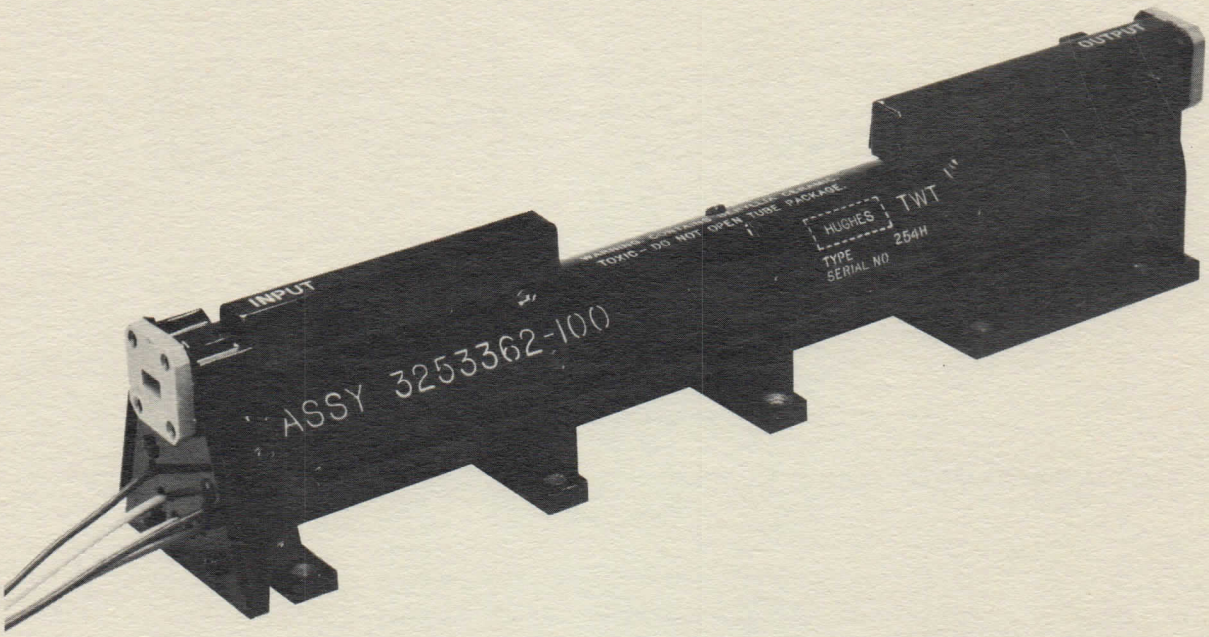

DESCRIPTION

The Hughes Model 254H traveling-wave tube was designed and built for a millimeter wave experiment on the ATS F/G spacecraft. The waveguide ports are frequency tunable. With this technique, VSWR's of less than 1.2:1 are obtainable over a 3 GHz bandwidth.

SPECIFICATIONS

Frequency	24–36 GHz
Power Output	2 W
Duty	CW
Gain (Saturation)	40 dB
Efficiency	10%
Beam Voltage	5500 V
Beam Current	12 mA
Anode Voltage	400 V
Anode Current	<.1 mA
Heater Voltage	4.0 V
Heater Current	250 mA
Construction	Metal Ceramic
Cooling	Conduction
Focusing	PPM
Weight	23 ounces
Length	10 inches
Connectors	Waveguide (UG 599/U)
Expected Life	10 years

254H

2W 24-36 GHz CW TWT

HUGHES

HUGHES AIRCRAFT COMPANY

ELECTRON DYNAMICS DIVISION

PERFORMANCE CURVE

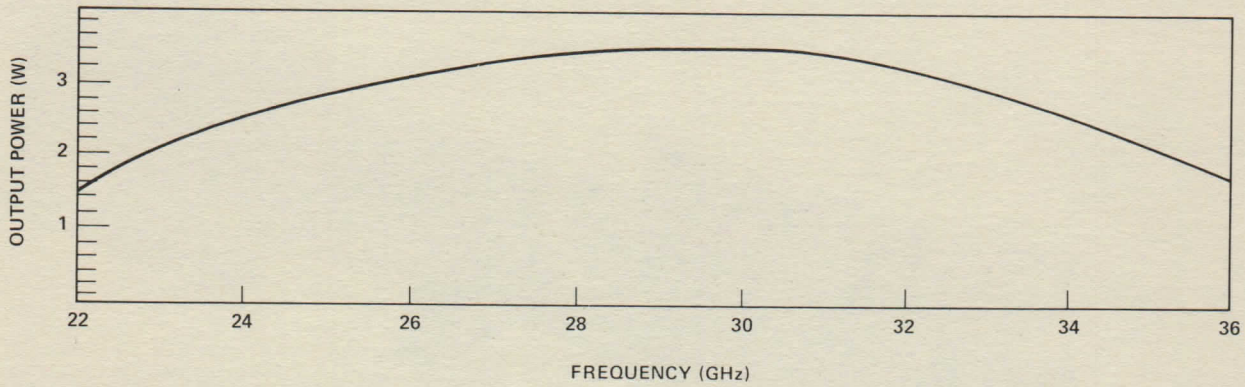

OUTLINE AND MOUNTING DRAWING

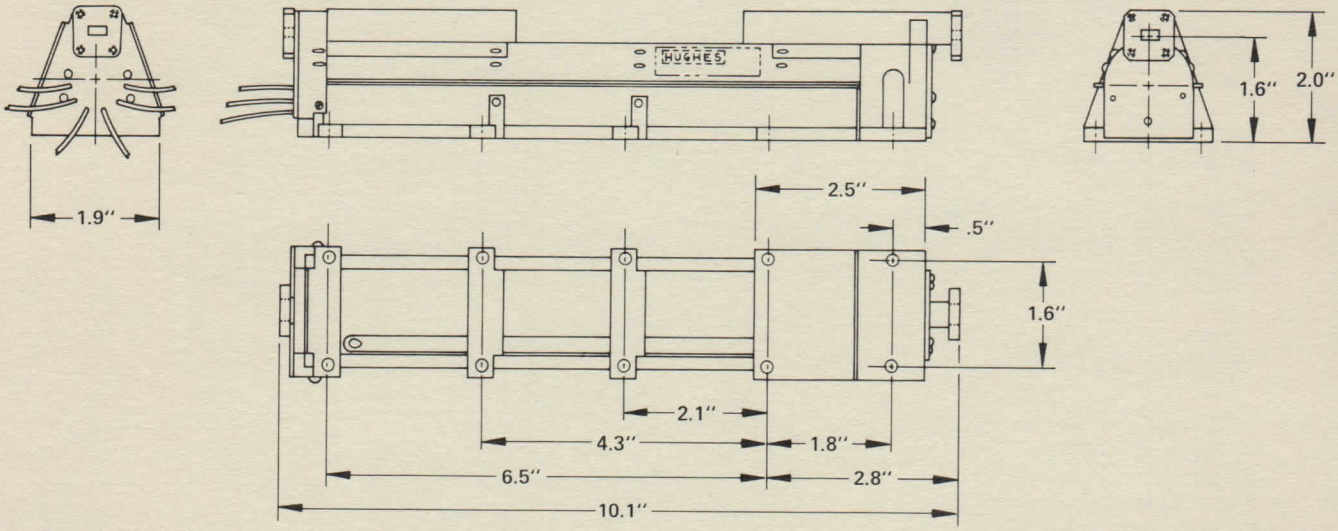

YOUR LOCAL REPRESENTATIVE

HUGHES
HUGHES AIRCRAFT COMPANY

ELECTRON DYNAMICS DIVISION / 3100 W. LOMITA BLVD. TORRANCE, CA.90509/TEL (213) 534-2121

Printed in U.S.A. –7–72

HUGHES

HUGHES AIRCRAFT COMPANY

ELECTRON DYNAMICS DIVISION

244H

4.5 W, 3.7-4.2 GHz CW TWT

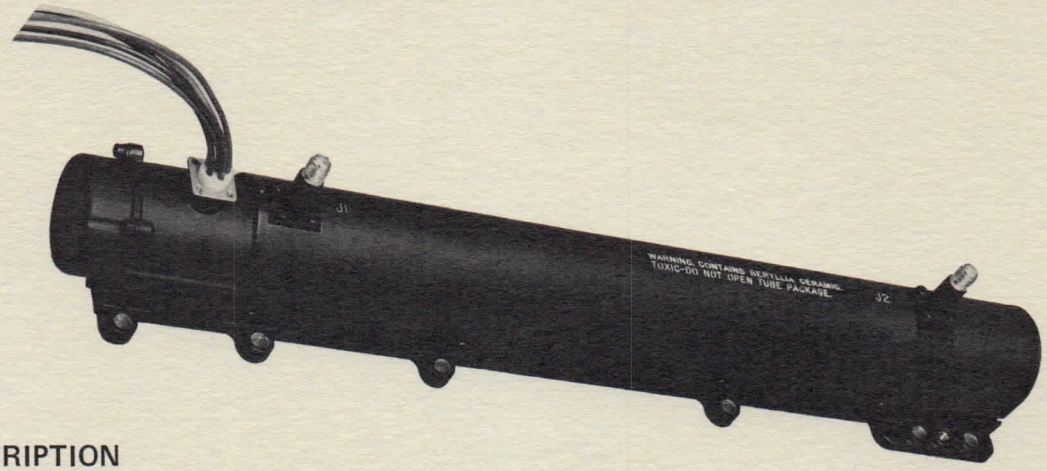

DESCRIPTION

The Hughes Model 244H traveling-wave tube was designed and built for the Intelsat V communication satellites. The high efficiency and long life of the environmentally rugged TWT makes the tube ideally suited for spacecraft applications. The 244H is utilized in the 1243H traveling-wave tube amplifiers.

SPECIFICATIONS*

RF PARAMETERS

Frequency	3.7–4.2 GHz
Output Power	4.5 W
Duty	CW
Saturated Gain	56 dB
Efficiency	36%
Noise Figure	29 dB

ELECTRICAL

Beam Voltage	–1200 V
Beam Current	21 mA
Anode Voltage	150 V
Anode Current	0.01 mA
Heater Voltage	4.5 V
Heater Current	260 mA

MECHANICAL

Construction	metal-ceramic
Cooling	conduction
Focusing	PPM
Weight	22 ounces (0.62 kg)
Length	12.35 inches (31.37 cm)
Connectors	SMA (female)
Expected Life	10 years

*Specifications subject to change without prior notice.

244H

4.5 W, 3.7-4.2 GHz CW TWT

HUGHES

HUGHES AIRCRAFT COMPANY

ELECTRON DYNAMICS DIVISION

TYPICAL PERFORMANCE CURVE

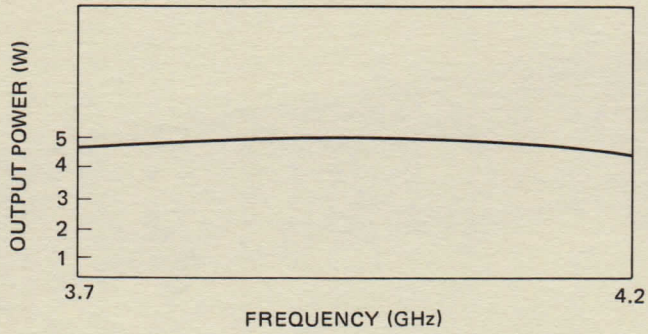

OUTLINE AND MOUNTING DRAWING

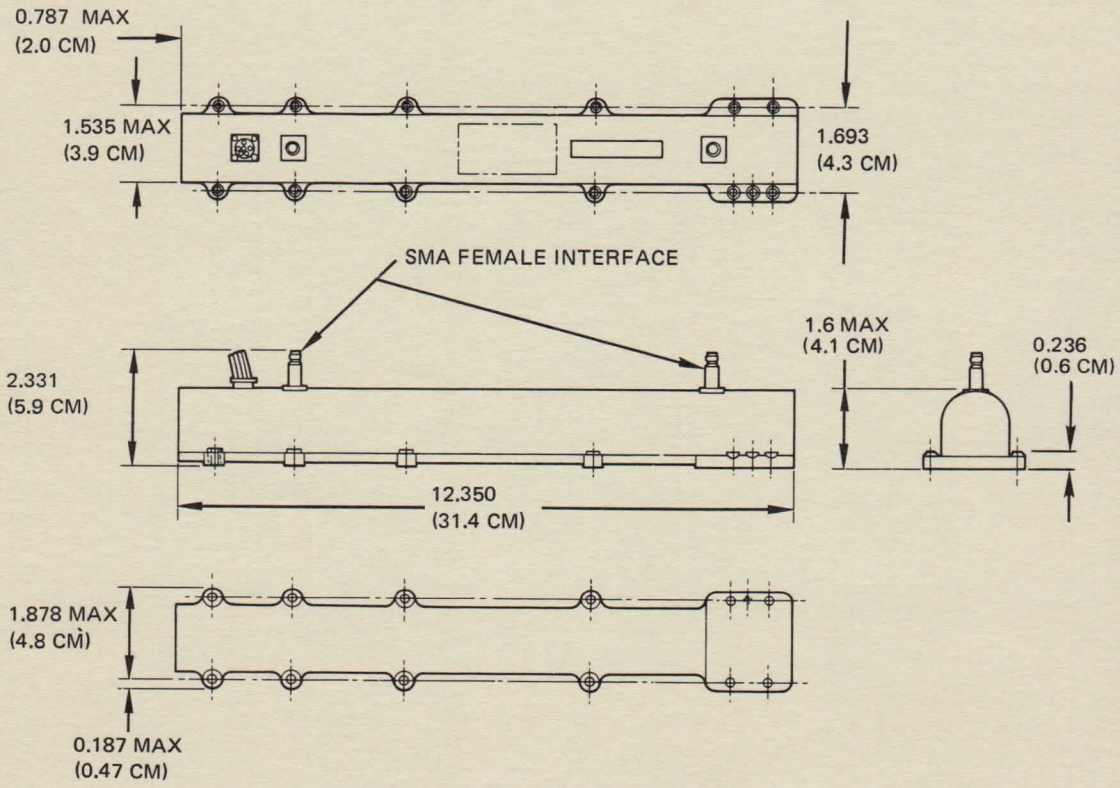

HUGHES ELECTRON DYNAMICS DIVISION 3100 West Lomita Boulevard, Torrance, California 90509, Tel (213) 534-2121

HUGHES AIRCRAFT COMPANY

Printed in U.S.A. 7-78 AL

HUGHES

HUGHES AIRCRAFT COMPANY

ELECTRON DYNAMICS DIVISION

249H

8.5 W, 3.7-4.2 GHz CW TWT

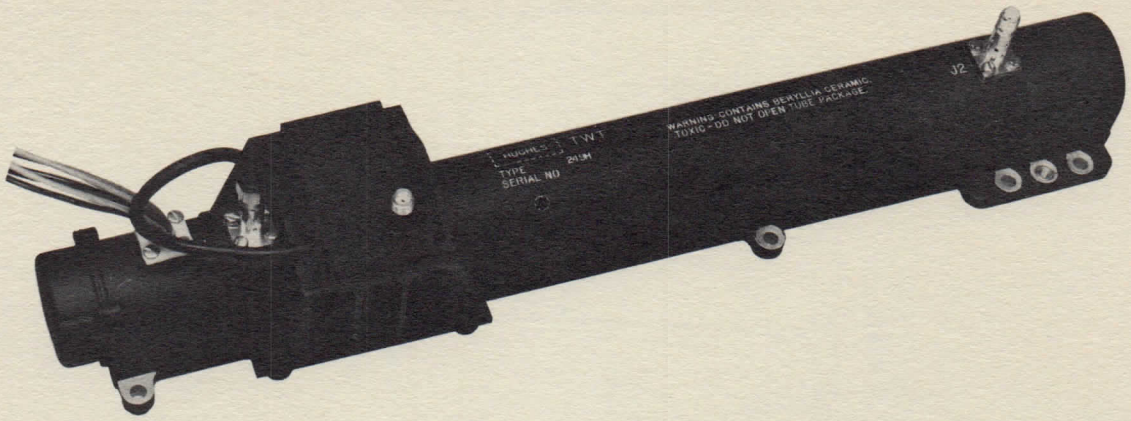

DESCRIPTION

The Hughes Model 249H TWT is a high efficiency, long-life traveling-wave tube designed for the Intelsat V spacecraft. This tube features an environmentally rugged, lightweight package that is ideally suited for space communications applications. The 249H is utilized in the 1244H traveling-wave tube amplifiers.

SPECIFICATIONS*

RF

Frequency	3.7–4.2 GHz
Output Power	8.5 W
Duty	CW
Saturated Gain	57 dB typical
Efficiency	39%
Noise Figure	28 dB

ELECTRICAL

Beam Voltage	–1575V
Beam Current	30 mA
Anode Voltage	200 V
Anode Current	0.01 mA
Heater Voltage	4.5 V
Heater Current	265 mA

MECHANICAL

Construction	metal ceramic
Cooling	conduction
Focusing	PPM-SmCo
Weight	28.8 oz (0.82 kg)
Length	13" (33.02 cm)
Connectors	SMA (female)
Expected Life	10 years

*Specifications subject to change without prior notice.

249H

8.5 W, 3.7-4.2 GHz CW TWT

HUGHES

HUGHES AIRCRAFT COMPANY

ELECTRON DYNAMICS DIVISION

TYPICAL PERFORMANCE CURVE

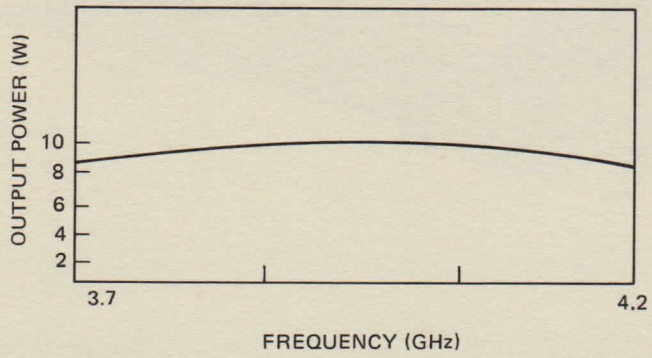

OUTLINE AND MOUNTING DRAWING

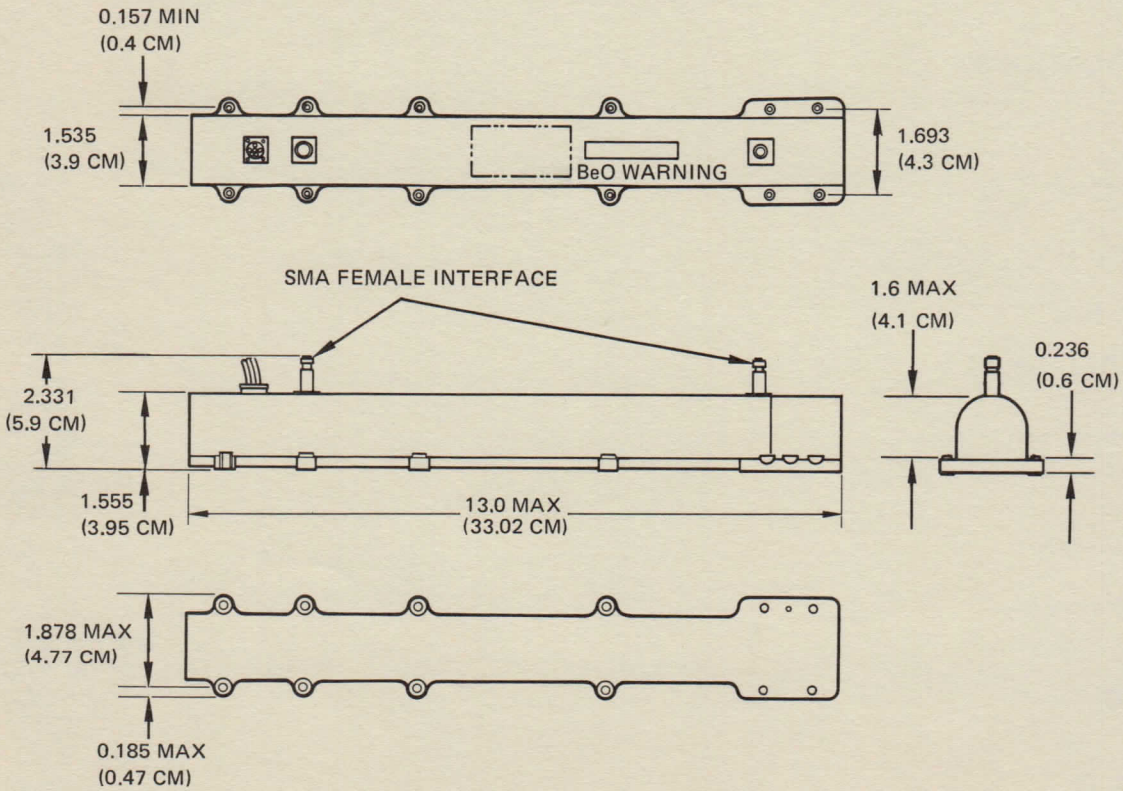

HUGHES
HUGHES AIRCRAFT COMPANY
ELECTRON DYNAMICS DIVISION 3100 West Lomita Boulevard, Torrance, California 90509, Tel (213) 534-2121

Printed in U.S.A. 7-78 AL

HUGHES

HUGHES AIRCRAFT COMPANY

ELECTRON DYNAMICS DIVISION

261H

6 W 3.5-4.8 GHz CW TWT

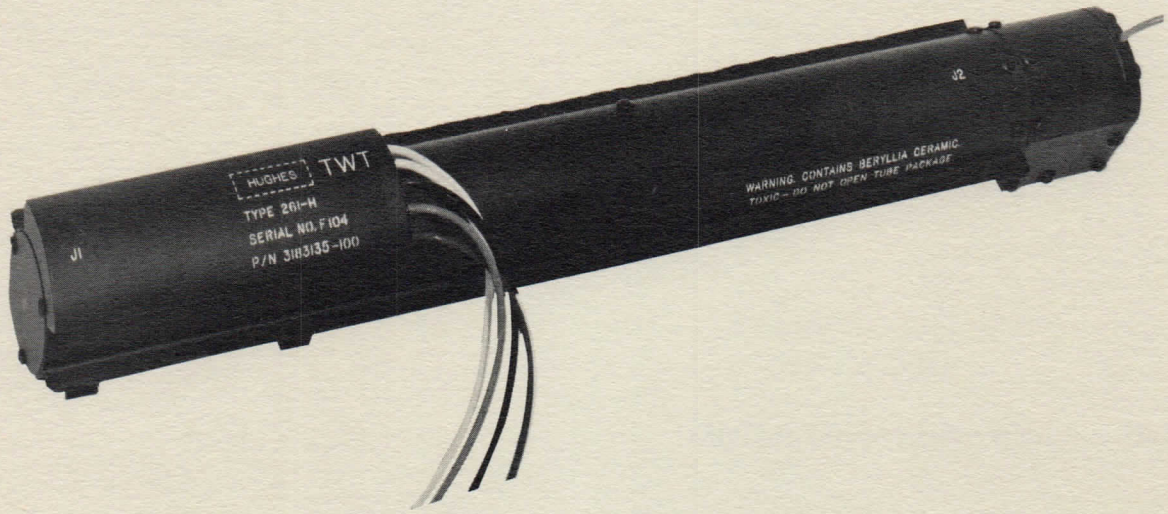

DESCRIPTION

The 261H was designed as the output traveling-wave tube for the Intelsat IV communications spacecraft. Its low incremental phase shift at all drive levels is indicative of its minimum distortion performance. The package is designed for RFI suppression.

SPECIFICATIONS

Frequency	3.5 - 4.8 GHz
Power Output	6 W
Duty	CW
Gain (Saturation)	57 dB
Efficiency	30%
Beam Voltage	–1600 V
Beam Current	26 mA
Anode Voltage	+200 V
Anode Current	0.01 mA
Collector Voltage	–850 V
Heater Voltage (with respect to cathode)	4.5 V
Heater Current	0.265 A
Construction	Metal Ceramic
Cooling	Conduction
Focusing	PPM
Weight	25 Ounces
Length	12.2 Inches
Connectors	OSM Female
Expected Life	10 Years

NOTE: All voltages except the heater voltage are with respect to helix (ground).

261H

6 W 3.5-4.8 GHz CW TWT

HUGHES

HUGHES AIRCRAFT COMPANY

ELECTRON DYNAMICS DIVISION

PERFORMANCE CURVES

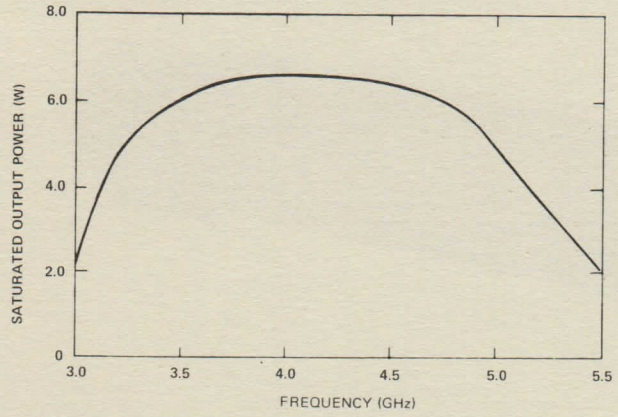

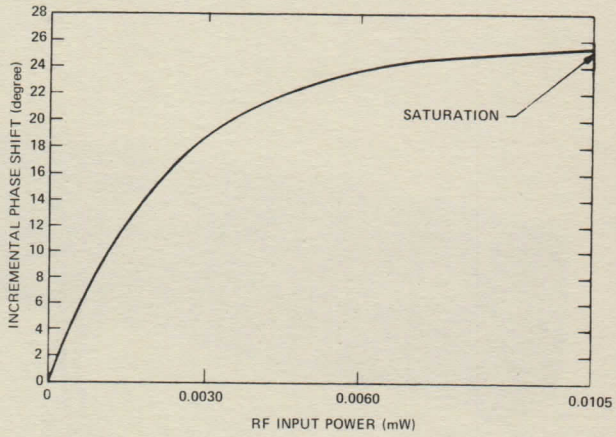

OUTLINE AND MOUNTING DRAWING

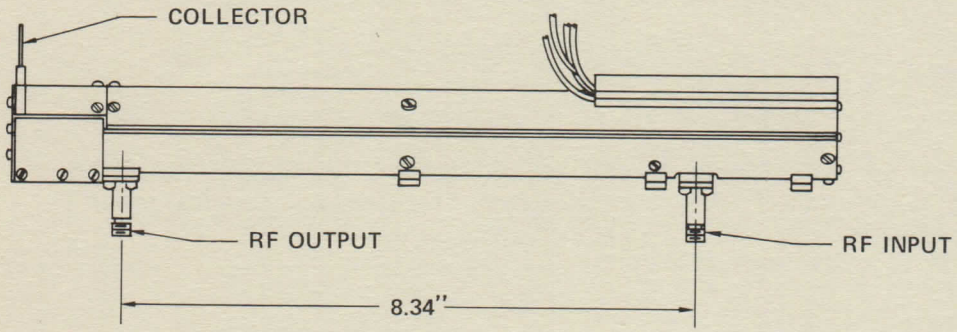

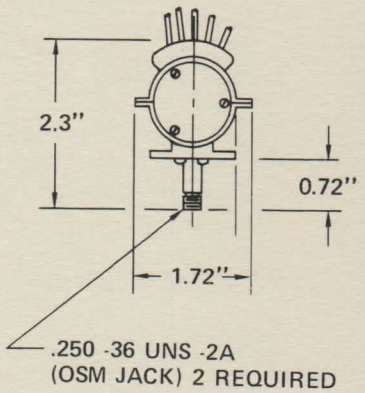

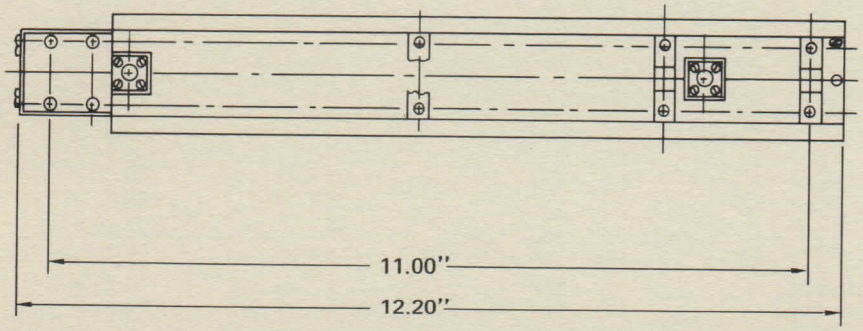

YOUR LOCAL REPRESENTATIVE

HUGHES
HUGHES AIRCRAFT COMPANY

MICROWAVE TRAVELING-WAVE TUBE PRODUCTS
ELECTRON DYNAMICS DIVISION 3100 West Lomita Boulevard, Torrance, California 90509, Tel (213) 534-2121

Printed in U.S.A. 7-74

HUGHES

HUGHES AIRCRAFT COMPANY

ELECTRON DYNAMICS DIVISION

262H

1.5W 4-6 GHz CW TWT

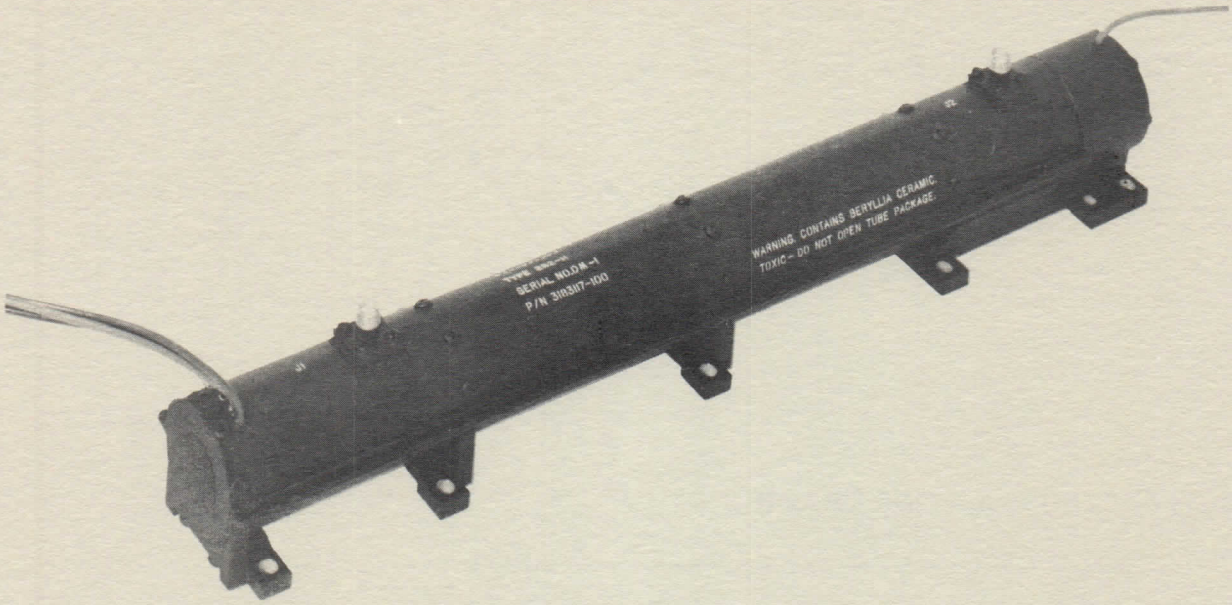

DESCRIPTION

The 262H traveling-wave tube was designed for the INTELSAT IV space craft. It is used as a moderate noise (NF 18 dB), low level driver, operating in the small-signal region with a small-signal gain of 42 dB.

SPECIFICATIONS

Frequency	4-6 GHz
Power Output	1.5 W
Duty	CW
Gain (Saturation)	35 dB
Efficiency	15%
Beam Voltage	1630 V
Beam Current	9 mA
Anode Voltage	210 V
Anode Current	0.005 mA
Collector Voltage	800 V
Heater Voltage	4.5 V
Heater Current	0.270 A
Construction	Metal Ceramic
Cooling	Conduction
Focusing	PPM
Weight	22 Ounces
Length	12 Inches
Connectors	OSM Female
Expected Life	10 Years

262H

1.5W 4-6 GHz CW TWT

HUGHES

HUGHES AIRCRAFT COMPANY

ELECTRON DYNAMICS DIVISION

PERFORMANCE CURVE

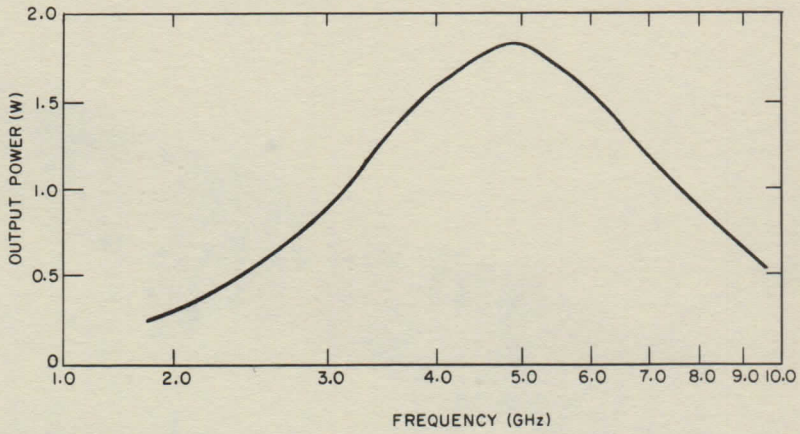

OUTLINE AND MOUNTING DRAWING

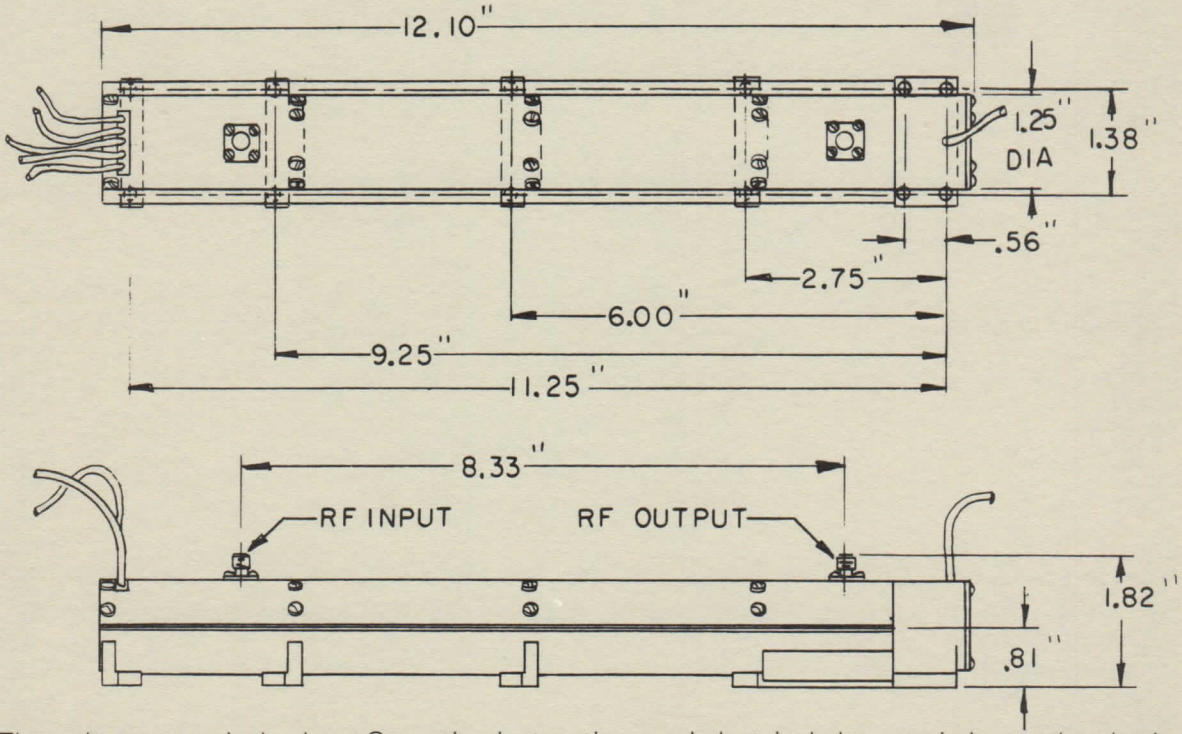

These data are typical values. Operating instructions and electrical characteristics can be obtained upon request.

HUGHES
HUGHES AIRCRAFT COMPANY

MICROWAVE TRAVELING-WAVE TUBE PRODUCTS
ELECTRON DYNAMICS DIVISION 3100 West Lomita Boulevard, Torrance, California 90509, Tel (213) 534-2121

Printed in U.S.A.—5-74

HUGHES

HUGHES AIRCRAFT COMPANY

ELECTRON DYNAMICS DIVISION

263H

500 mW 7-8 GHz CW TWT

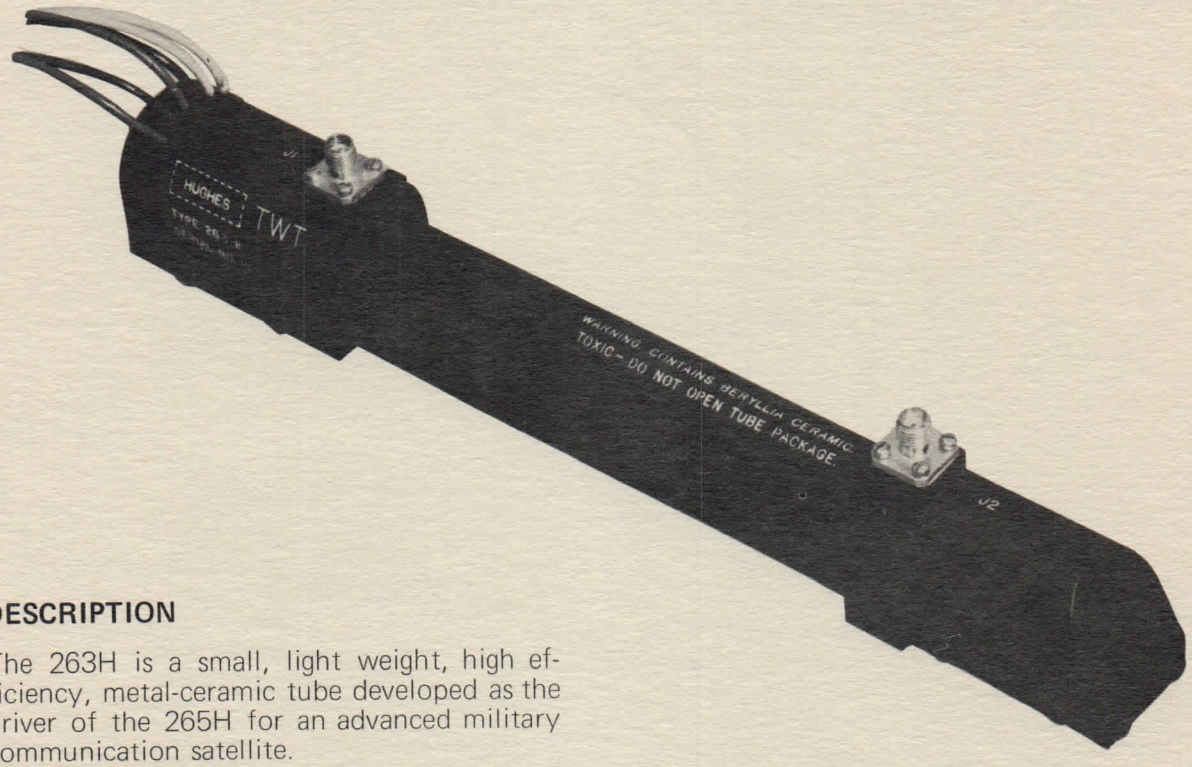

DESCRIPTION

The 263H is a small, light weight, high efficiency, metal-ceramic tube developed as the driver of the 265H for an advanced military communication satellite.

SPECIFICATIONS

FREQUENCY	7 – 8 GHz
POWER OUTPUT (SATURATED)	500 mW minimum
DUTY	CW
GAIN (SMALL SIGNAL)	38 dB
EFFICIENCY	16%
BEAM VOLTAGE	1750 V
BEAM CURRENT	4.75 mA
ANODE VOLTAGE	200 V
ANODE CURRENT	.002 mA
HEATER VOLTAGE	3.85 V
HEATER CURRENT	250 mA
CONSTRUCTION	metal ceramic
COOLING	conduction
FOCUSING	PPM
CONNECTORS	OSM female
WEIGHT	16 oz.
LENGTH	9.5 inches
EXPECTED LIFE	>5 years

263H

500 mW 7-8 GHz CW TWT

HUGHES

HUGHES AIRCRAFT COMPANY

ELECTRON DYNAMICS DIVISION

PERFORMANCE CURVE

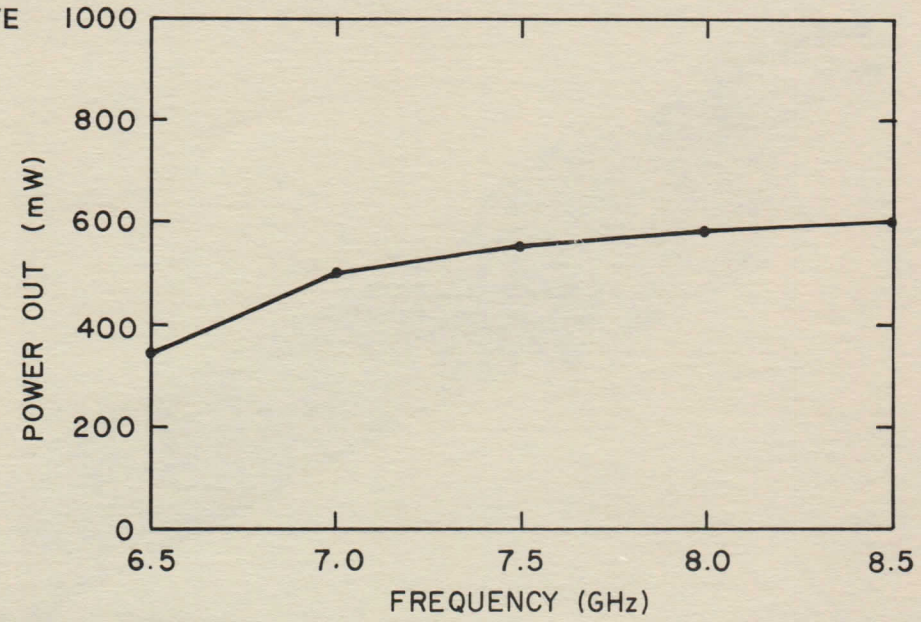

OUTLINE AND MOUNTING DRAWING

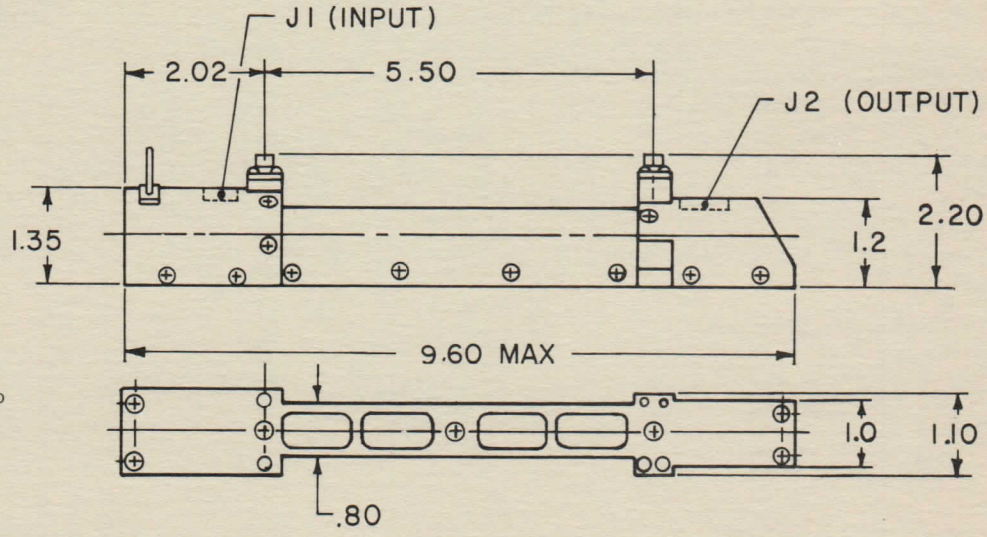

Specifications subject to change without notice

YOUR LOCAL REPRESENTATIVE

HUGHES
HUGHES AIRCRAFT COMPANY

ELECTRON DYNAMICS DIVISION / 3100 W. LOMITA BLVD. TORRANCE, CALIFORNIA 90509

Printed in U.S.A.–5-71

HUGHES

ELECTRON DYNAMICS DIVISION

265H

22W 7-9 GHz CW TWT

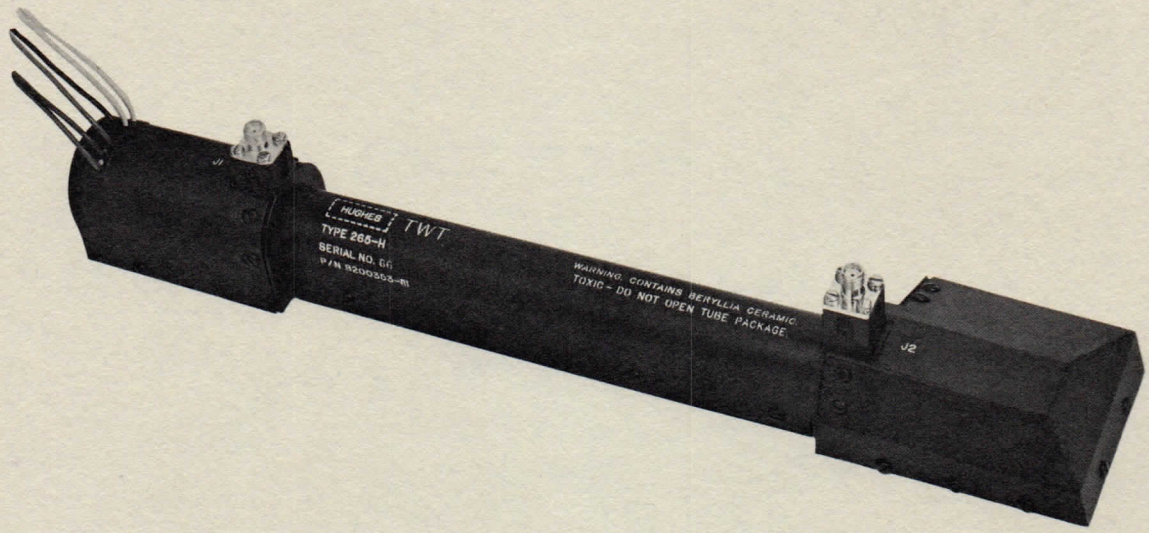

DESCRIPTION

The 265H is a small, lightweight, high efficiency, metal ceramic tube developed for an advanced military communications satellite.

SPECIFICATIONS

Frequency	7-9 GHz
Power Output	22 W
Duty	CW
Gain (Saturation)	46 dB
Efficiency	33%
Beam Voltage	-3800 V
Beam Current	50 mA
Anode Voltage	+100 V
Anode Current	0.10 mA
Collector Voltage	-2400 V
Heater Voltage	5.2 V
Heater Current	400 mA
Construction	Metal Ceramic
Cooling	Conduction
Focusing	PPM
Weight	35 Ounces
Length	12 Inches
Connector	OSM Female
Expected Life	>100,000 Hours

265H

22W 7-9 GHz CW TWT

HUGHES

ELECTRON DYNAMICS DIVISION

PERFORMANCE CURVE

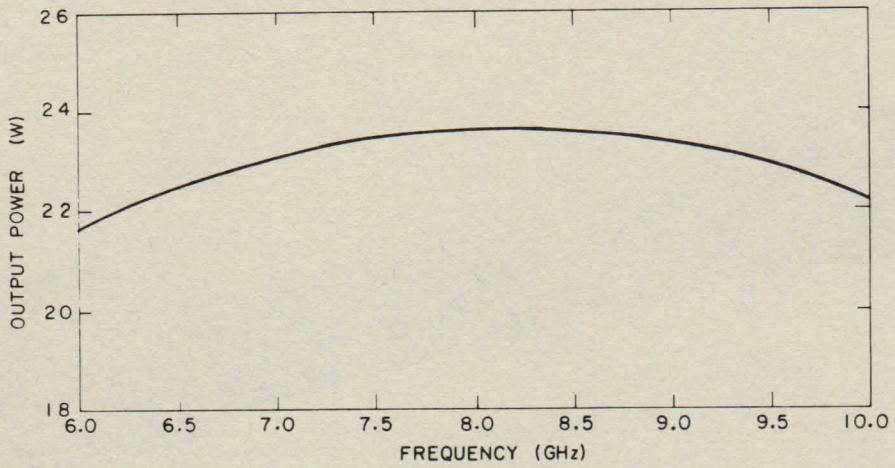

OUTLINE AND MOUNTING DRAWING

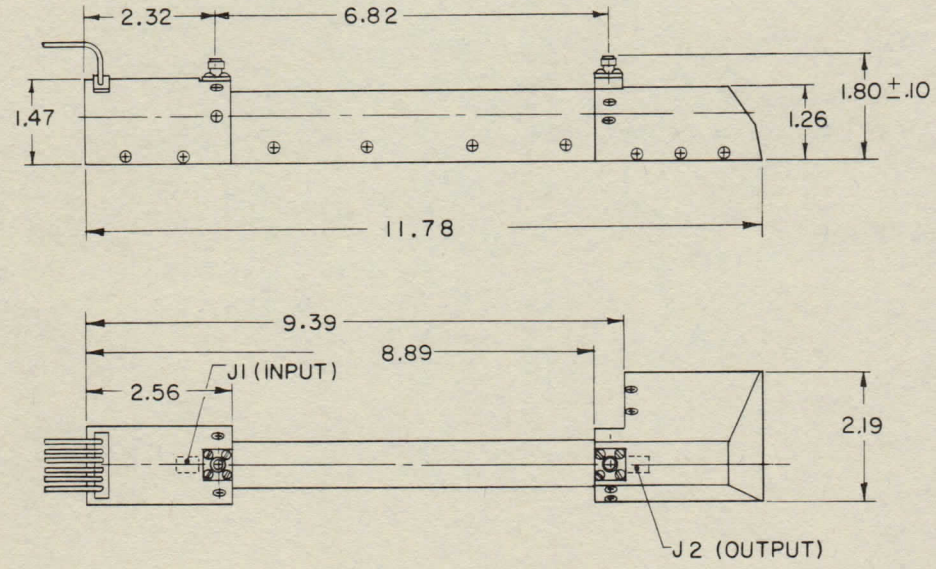

YOUR LOCAL REPRESENTATIVE

HUGHES
HUGHES AIRCRAFT COMPANY

ELECTRON DYNAMICS DIVISION / 3100 W. LOMITA BLVD. TORRANCE, CA. 90509 / TEL (213) 534-2121

Printed in U.S.A.—11—71

HUGHES

HUGHES AIRCRAFT COMPANY

ELECTRON DYNAMICS DIVISION

271H

6 W 3.7-4.2 GHz CW TWT

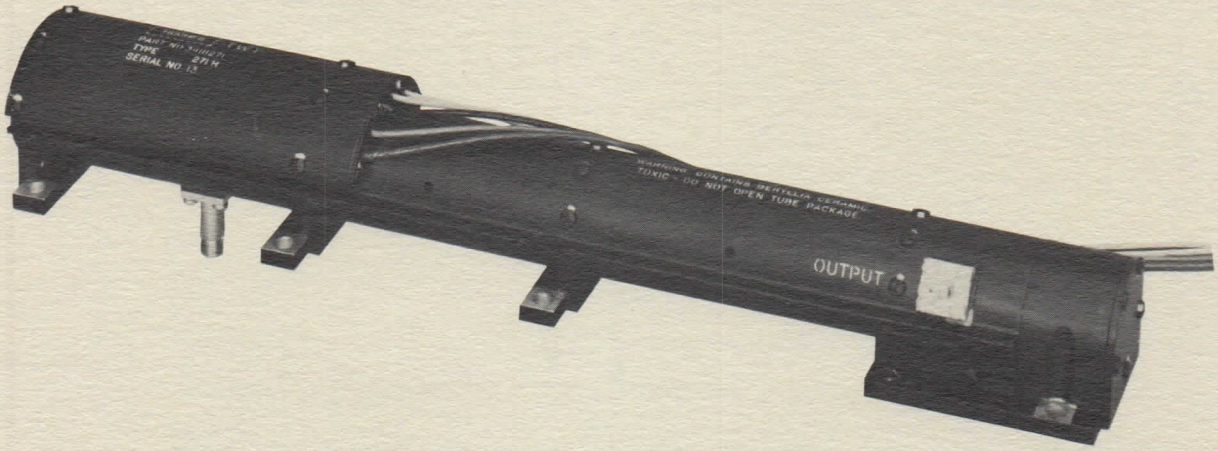

DESCRIPTION

The Hughes Model 271H traveling-wave tube was designed for the output of Intelsat IV A Communication satellites. Its low incremented phase shift at all drive levels is indicative of its minimum distortion performance. This package is designed for RFI suppression.

SPECIFICATIONS

Frequency	3.7 - 4.2 GHz
Power Output	6 W
Duty	CW
Gain (saturation)	57 dB
Efficiency	30%
Beam Voltage	-1550 V
Beam Current	26 mA
Anode Voltage	200 V
Anode Current	0.010 mA
Heater Voltage	4.5 V
Heater Current	260 mA
Construction	metal-ceramic
Cooling	conduction
Focusing	PPM
Weight	28 ounces (793.77 gr)
Length	12.3 inches (31.24 cm)
Connectors	SMA female
Expected Life	10 years

271H

6 W 3.7-4.2 GHz CW TWT

HUGHES

HUGHES AIRCRAFT COMPANY

ELECTRON DYNAMICS DIVISION

TYPICAL PERFORMANCE CURVE

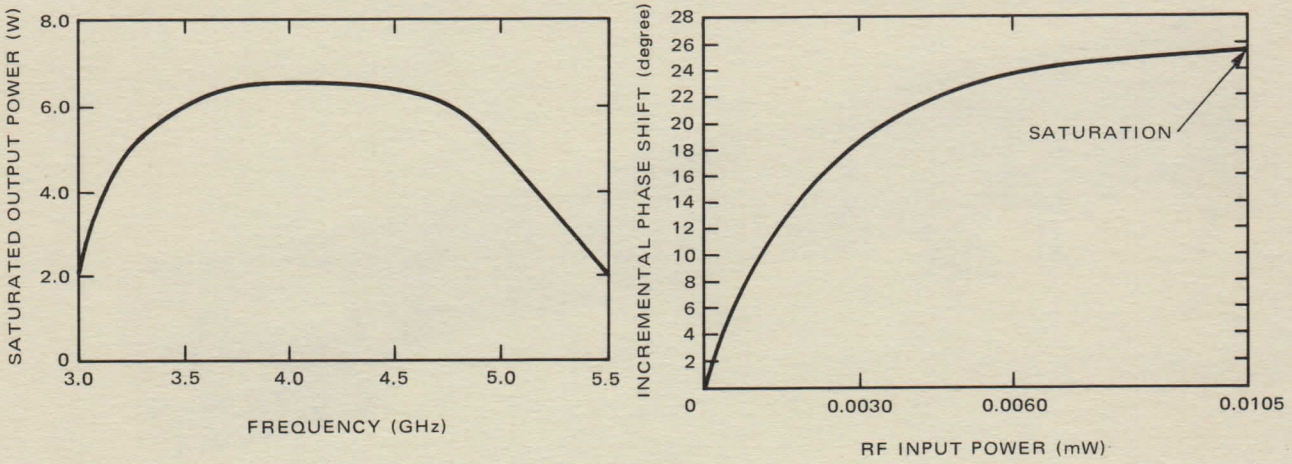

OUTLINE DRAWING

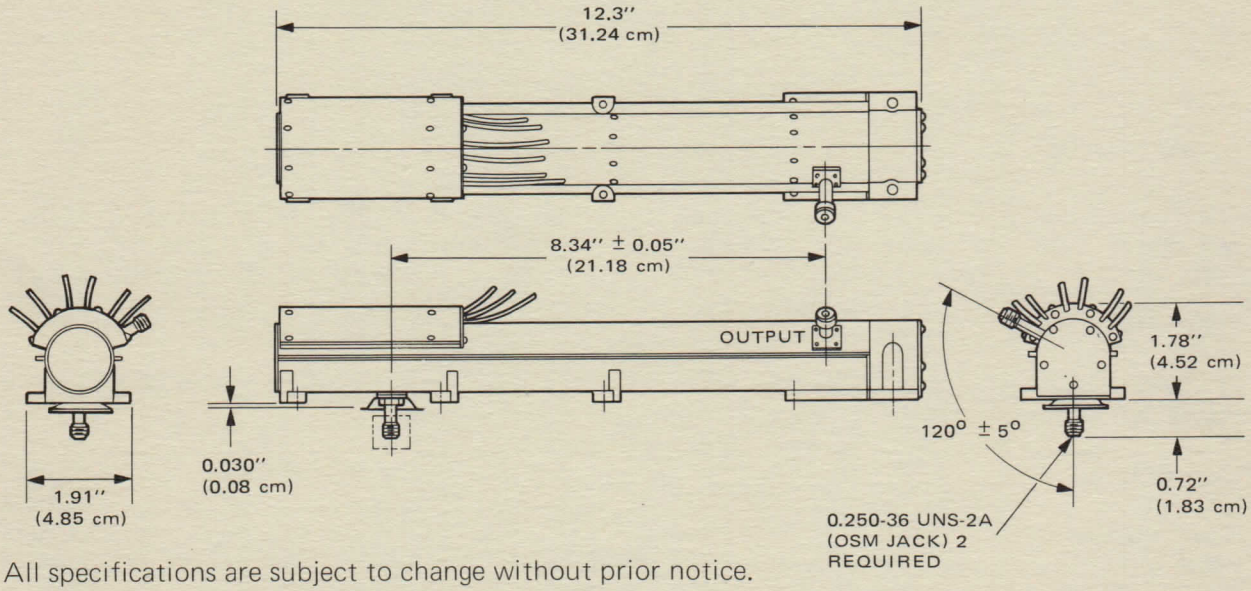

All specifications are subject to change without prior notice.

YOUR LOCAL REPRESENTATIVE

HUGHES HUGHES AIRCRAFT COMPANY **ELECTRON DYNAMICS DIVISION** MICROWAVE TRAVELING-WAVE TUBE PRODUCTS 3100 West Lomita Boulevard, Torrance, California 90509, Tel (213) 534-2121

Printed in U.S.A.–12–74

HUGHES

HUGHES AIRCRAFT COMPANY

ELECTRON DYNAMICS DIVISION

272H

1.5 W 3.7-4.2 GHz CW TWT

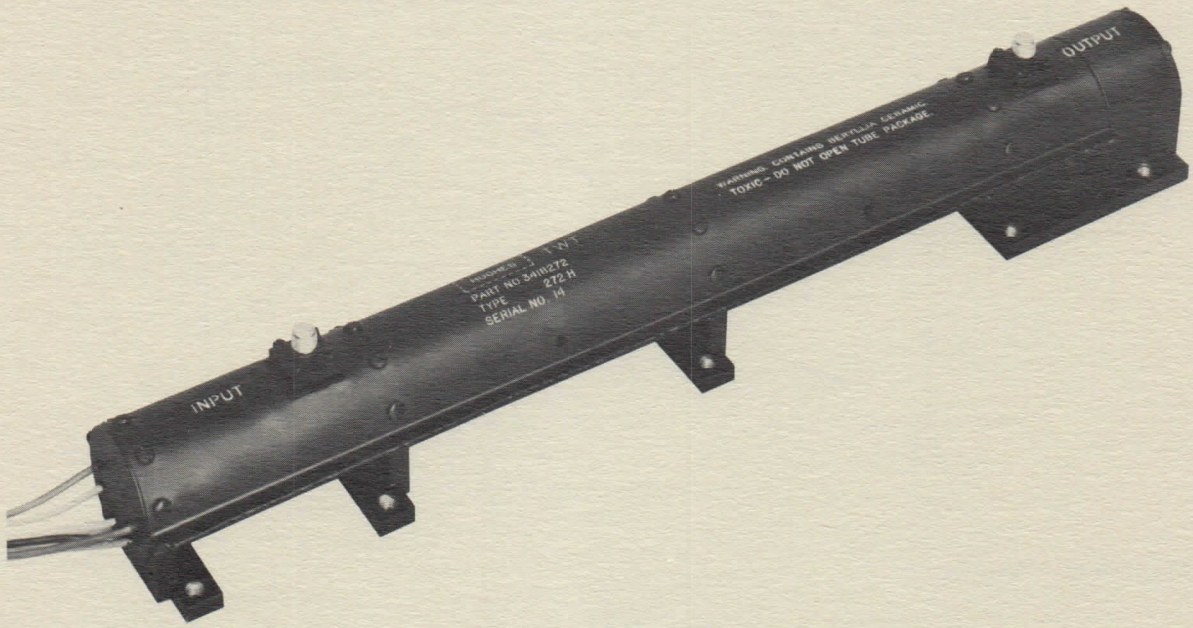

DESCRIPTION

The Hughes Model 272H was designed as the driver tube for the Comsat Domestic Communication satellites. This tube operates in the small signal region with a small signal gain of 42 dB and a noise figure of 19.5 dB.

SPECIFICATIONS

Frequency	3.7 - 4.2 GHz
Power Output	1.7 W
Duty	CW
Gain (saturation)	35 dB
Efficiency	12%
Beam Voltage	-1630 V
Beam Current	9.0 mA
Anode Voltage	200 V
Anode Current	0.01 mA
Heater Voltage	4.4 V
Heater Current	255 mA
Construction	metal-ceramic
Cooling	conduction
Focusing	PPM
Weight	21 ounces (595.33 gr)
Length	12 inches (30.48 cm)
Connectors	SMA female
Expected Life	10 years

272H

1.5 W 3.7-4.2 GHz CW TWT

HUGHES

HUGHES AIRCRAFT COMPANY

ELECTRON DYNAMICS DIVISION

TYPICAL PERFORMANCE CURVE

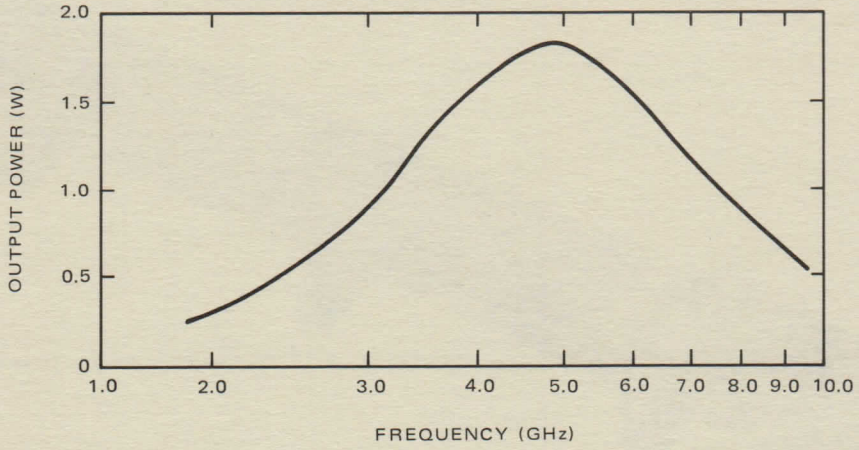

OUTLINE DRAWING

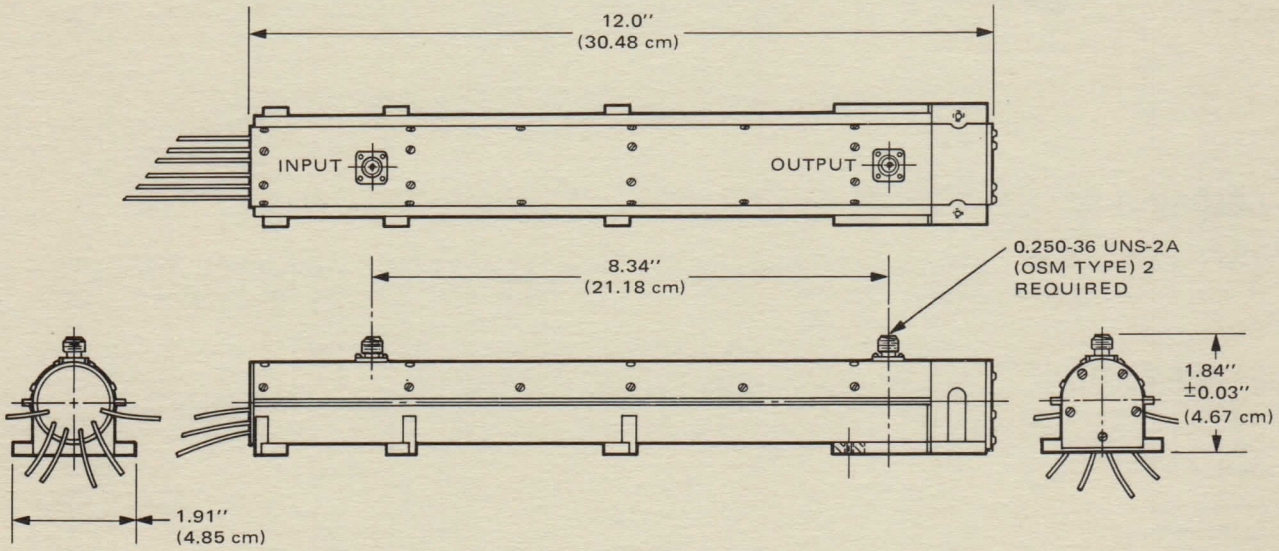

All specifications are subject to change without prior notice.

YOUR LOCAL REPRESENTATIVE

HUGHES
HUGHES AIRCRAFT COMPANY
ELECTRON DYNAMICS DIVISION MICROWAVE TRAVELING-WAVE TUBE PRODUCTS 3100 West Lomita Boulevard, Torrance, California 90509, Tel (213) 534-2121

Printed in U.S.A.–12–74

HUGHES

HUGHES AIRCRAFT COMPANY

ELECTRON DYNAMICS DIVISION

275H

5 W 3.7-4.2 GHz CW TWT

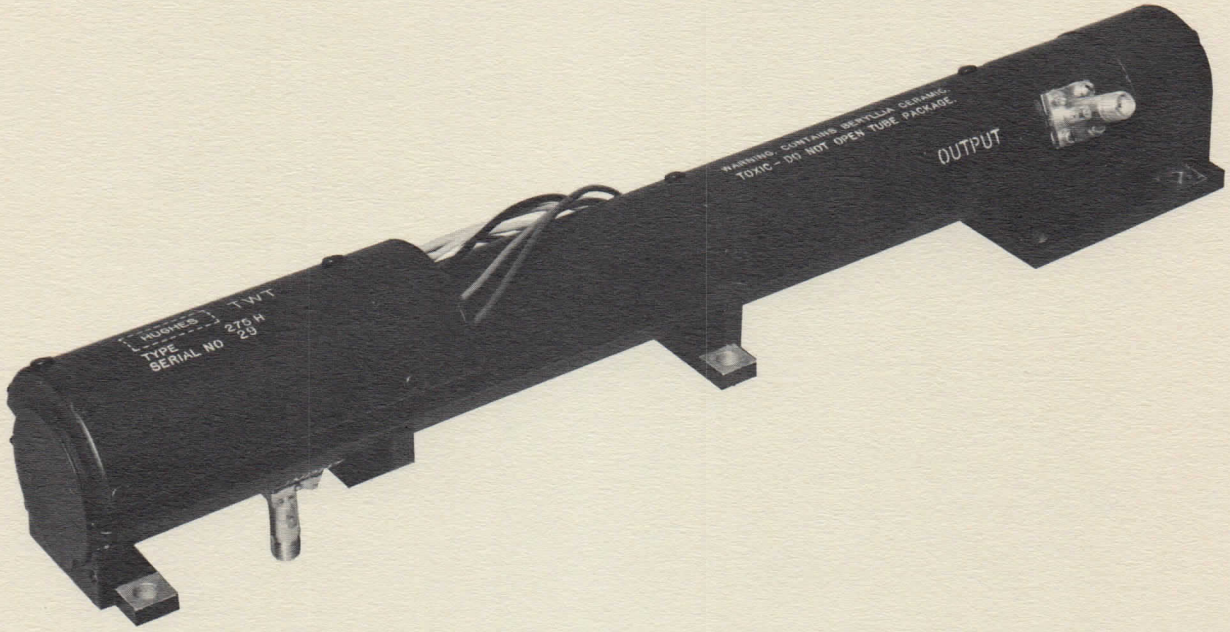

DESCRIPTION

The Hughes Model 275H traveling-wave tube is used as the output tube for a series of Communications Satellites. This tube is of a rugged design with high efficiency at this relatively low output power level. The tube may be operated at slightly lower voltages for flatter gain performance with approximately 4 watts of output power.

SPECIFICATIONS*

Frequency	3.7–4.2 GHz
Power Output	5 W
Duty	CW
Gain (saturation)	55 dB
Efficiency	35%
Beam Voltage	1300 V
Beam Current	22 mA
Anode Voltage	80 V
Anode Current	.01 mA
Heater Voltage	4.5 V
Heater Current	260 mA
Construction	metal ceramic
Cooling	conduction
Focusing	PPM
Weight	1.44 pounds (0.65 kg)
Length	11.9 inches (30.23 cm)
Connectors	OSM
Expected Life	> 10 years

*All specifications are subject to change without prior notice.

275H

5 W 3.7-4.2 GHz CW TWT

HUGHES

HUGHES AIRCRAFT COMPANY

ELECTRON DYNAMICS DIVISION

TYPICAL PERFORMANCE CURVE

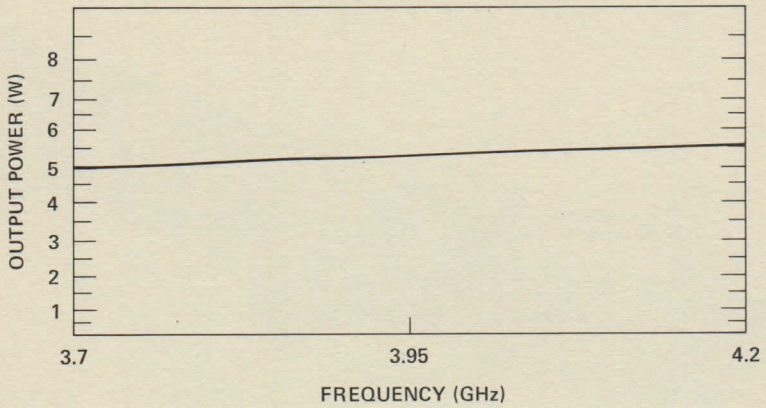

OUTLINE DRAWING

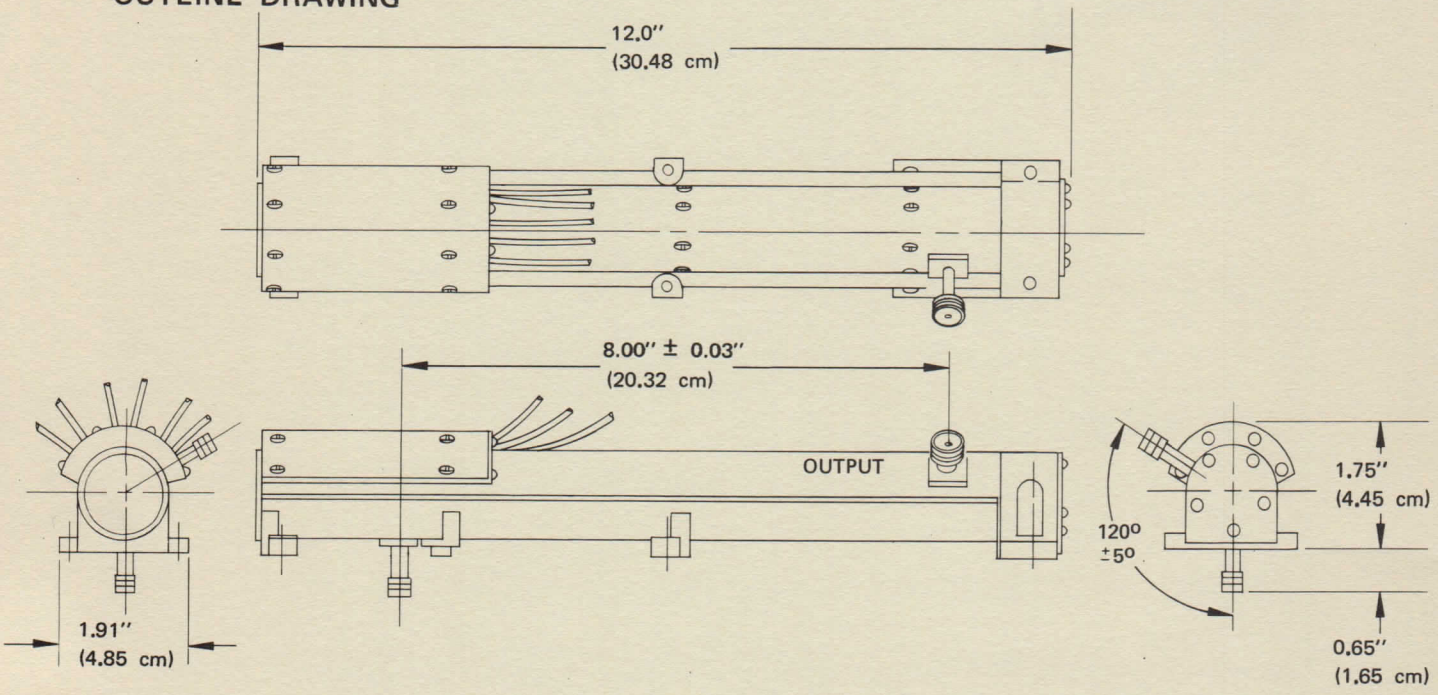

HUGHES
HUGHES AIRCRAFT COMPANY
ELECTRON DYNAMICS DIVISION
3100 West Lomita Boulevard, P.O. Box 2999, Torrance, California 90509, Tel (213) 517-6000

Printed in U.S.A. 3/82 AL

HUGHES

HUGHES AIRCRAFT COMPANY

ELECTRON DYNAMICS DIVISION

276H

500 mW 3.7-4.2 GHz CW TWT

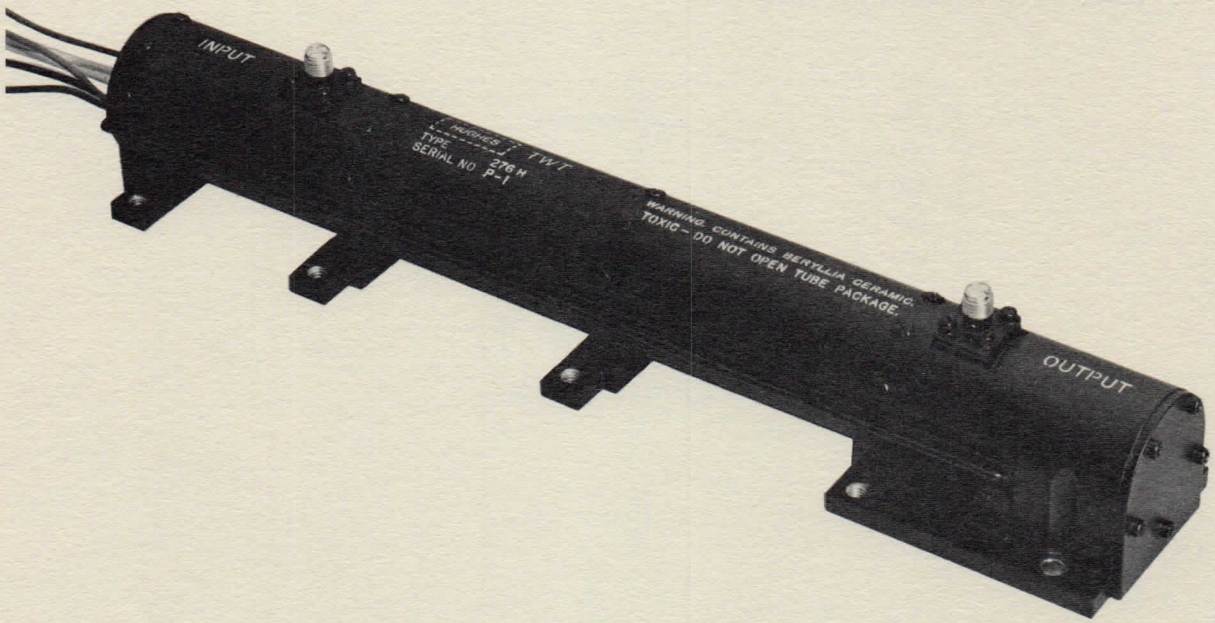

DESCRIPTION

The Hughes Model 276H traveling-wave tube is a small, light-weight, high efficiency, metal-ceramic tube developed as the driver for the 275H traveling-wave tube which is utilized on Anik I, the Canadian Domestic Satellite.

SPECIFICATIONS*

Frequency	3.7–4.2 GHz
Power Output	500 mW
Duty	CW
Gain (at rated power output)	31 dB
Efficiency	17%
Beam Voltage	1050 V
Beam Current	4.8 mA
Anode Voltage	100 V
Anode Current	.01 mA
Heater Voltage	4.2 V
Heater Current	260 mA
Construction	metal ceramic
Cooling	conduction
Focusing	Alnico PPM
Weight	.18 ounces (510.28 gr)
Length	10.5 inches (26.67 cm)
Connectors	OSM
Expected Life	10 years
Noise Figure	18.75 dB max.

*All specifications are subject to change without prior notice.

276H

500 mW 3.7-4.2 GHz CW TWT

HUGHES

HUGHES AIRCRAFT COMPANY

ELECTRON DYNAMICS DIVISION

TYPICAL PERFORMANCE CURVE

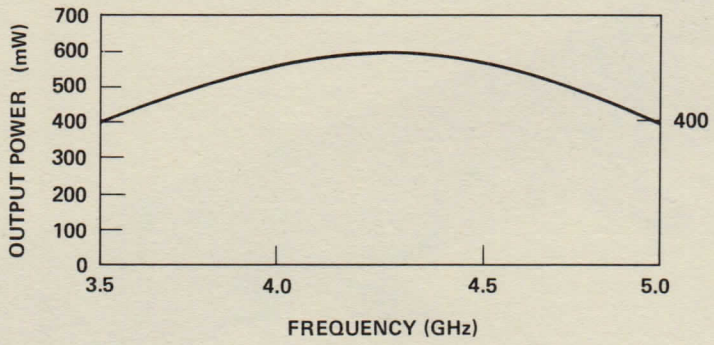

OUTLINE DRAWING

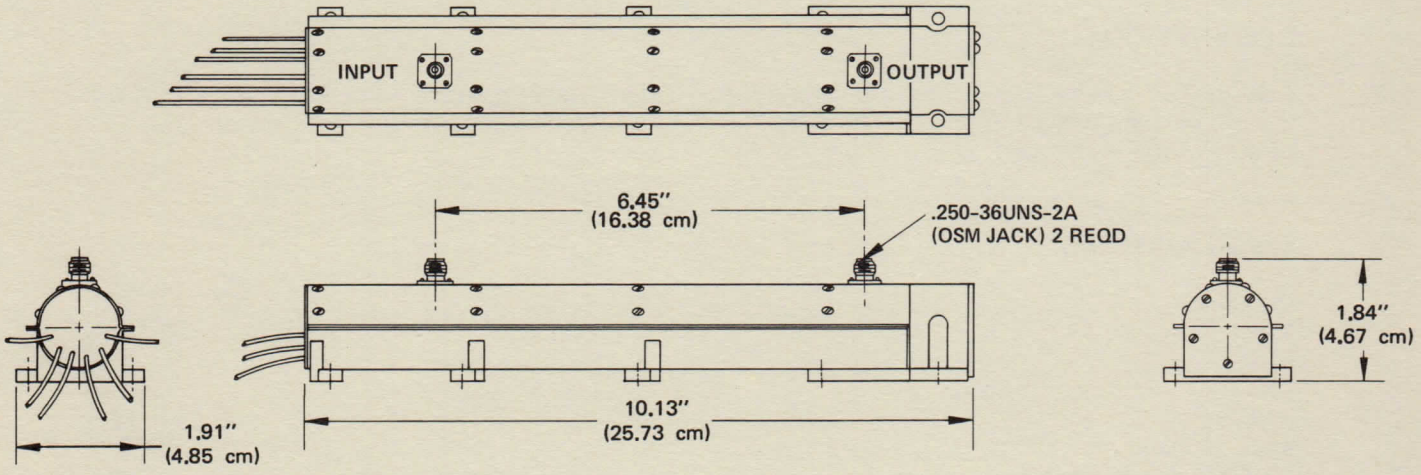

HUGHES
HUGHES AIRCRAFT COMPANY
ELECTRON DYNAMICS DIVISION MICROWAVE TRAVELING-WAVE TUBE PRODUCTS 3100 West Lomita Boulevard, Torrance, California 90509, Tel (213) 534-2121

Printed in U.S.A. 7-75

HUGHES

HUGHES AIRCRAFT COMPANY

ELECTRON DYNAMICS DIVISION

277H

5.5 W 3.7-4.2 GHz CW TWT

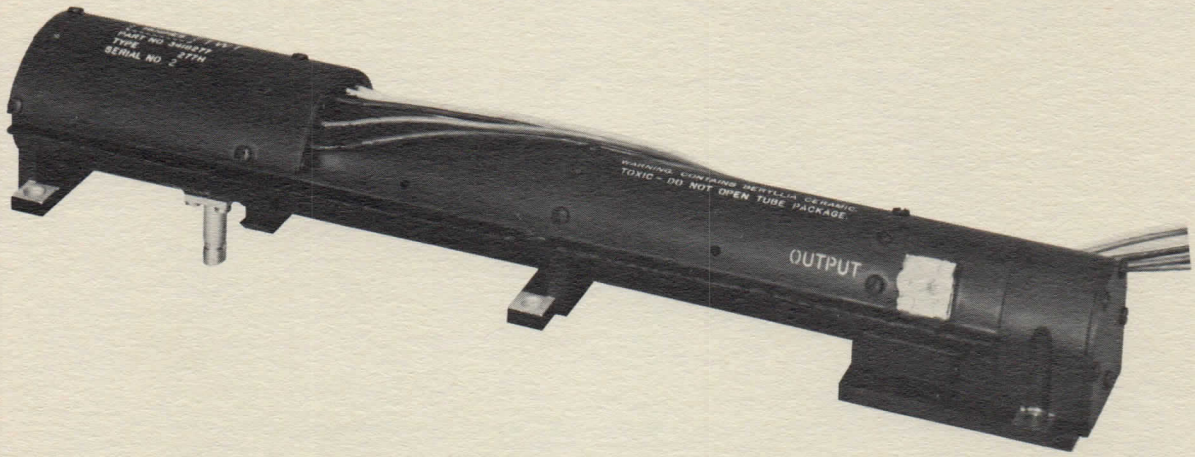

DESCRIPTION

The Hughes Model 277H traveling-wave tube was designed as an output tube for the Comsat Domestic satellite. The tube package is designed for minimum RFI susceptibility and leakage. This tube may be operated at lower voltages for flatter gain response with approximately 4 watts of output power with some sacrifice to the efficiency.

SPECIFICATIONS

Frequency	3.7 - 4.2 GHz
Power Output	5.5 W
Duty	CW
Gain (saturation)	55 dB
Efficiency	36%
Beam Voltage	-1350 V
Beam Current	25 mA
Anode Voltage	150 V
Anode Current	0.01 mA
Heater Voltage	4.5 V
Heater Current	260 mA
Construction	metal-ceramic
Cooling	conduction
Focusing	PPM
Weight	23 ounces (652.03 gr)
Length	12.0 inches (30.48 cm)
Connectors	SMA female
Expected Life	10 years

277H

5.5 W 3.7-4.2 GHz CW TWT

HUGHES

HUGHES AIRCRAFT COMPANY

ELECTRON DYNAMICS DIVISION

TYPICAL PERFORMANCE CURVE

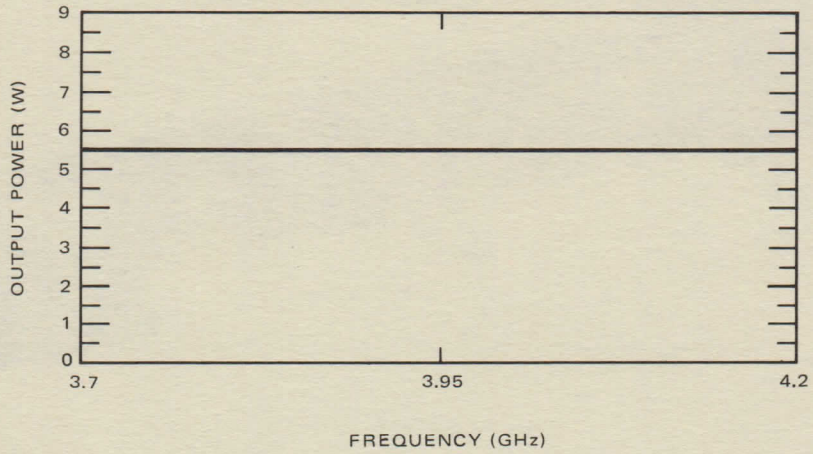

OUTLINE DRAWING

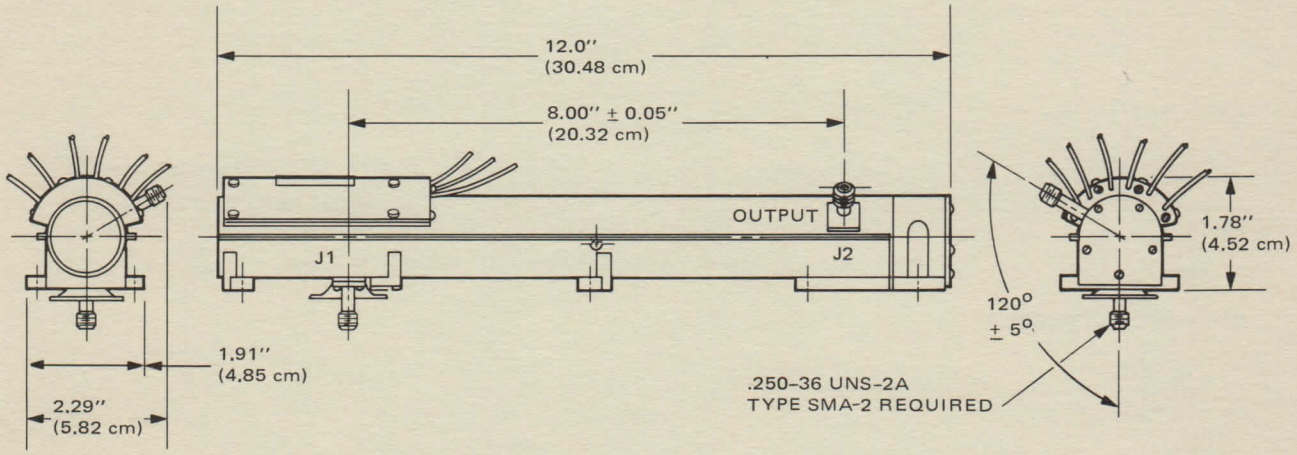

All specifications are subject to change without prior notice.

YOUR LOCAL REPRESENTATIVE

HUGHES
HUGHES AIRCRAFT COMPANY
ELECTRON DYNAMICS DIVISION MICROWAVE TRAVELING-WAVE TUBE PRODUCTS 3100 West Lomita Boulevard, Torrance, California 90509, Tel (213) 534-2121

Printed in U.S.A.—12—74

HUGHES

HUGHES AIRCRAFT COMPANY

ELECTRON DYNAMICS DIVISION

278H

26 W 2.025-2.120 GHz CW TWT

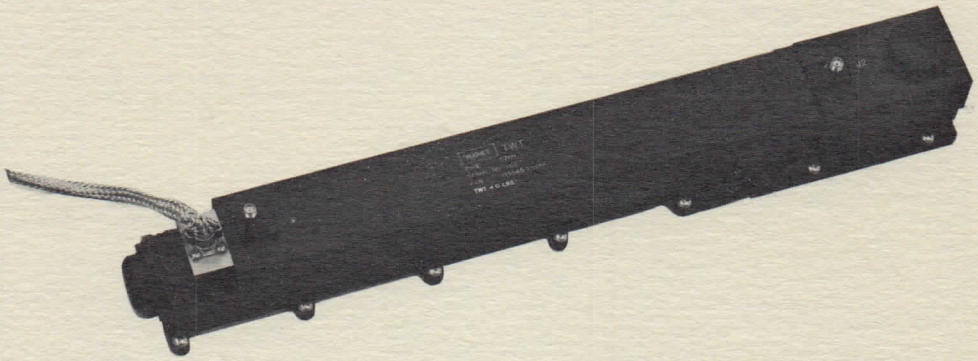

DESCRIPTION

The Hughes Model 278H traveling-wave tube is designed and built for the Tracking and Data Relay Satellite System. The high efficiency TWT features a doubly depressed collector. The metal-ceramic construction of this tube provides a light-weight rugged package for space application. The long life and stringent RF characteristics make this TWT well suited for high reliability communication satellites. This TWT is used with the 1266H TWTA.

SPECIFICATIONS*

RF Parameters

Frequency	2.025–2.120 GHz
Output Power	26 W
Duty	CW
Saturated Gain	43 dB
Efficiency	42%
Noise Figure	32 dB maximum

Electrical

Beam Voltage	-2750 V
Beam Current	49 mA
Anode Voltage	150 V
Anode Current	0.02 mA
Heater Voltage	6.1 V
Heater Current	0.44 mA

Mechanical

Construction	metal ceramic
Cooling	conduction
Focusing	PPM
Weight	66 ounces (1.87 kg)
Length	17.5 inches (44.5 cm)
Connectors	SMA female
Expected Life	10 years

*All specifications subject to change without prior notice.

278H

26 W 2.025-2.120 GHz CW TWT

HUGHES

HUGHES AIRCRAFT COMPANY

ELECTRON DYNAMICS DIVISION

TYPICAL PERFORMANCE CURVE

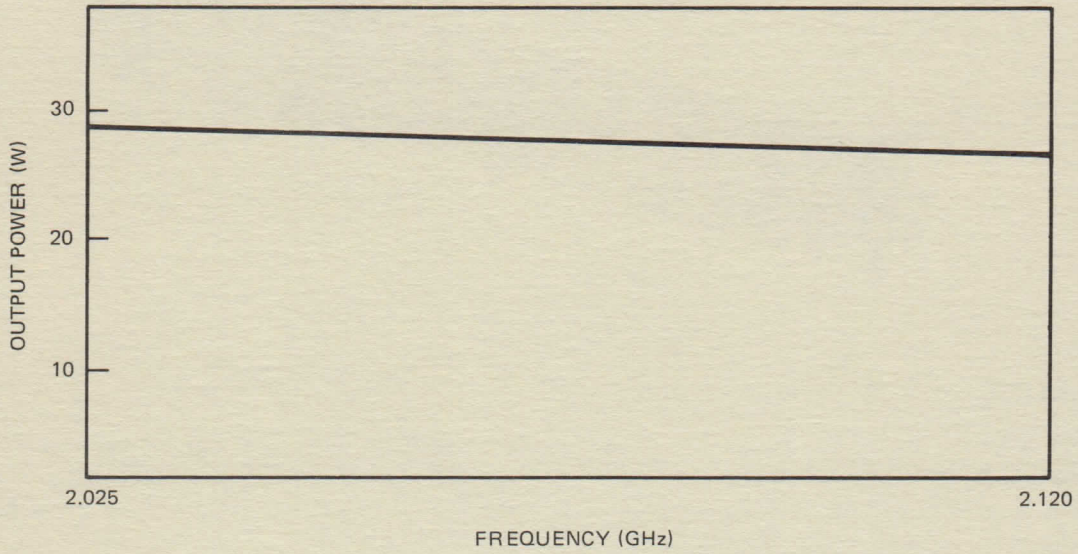

OUTLINE DRAWING

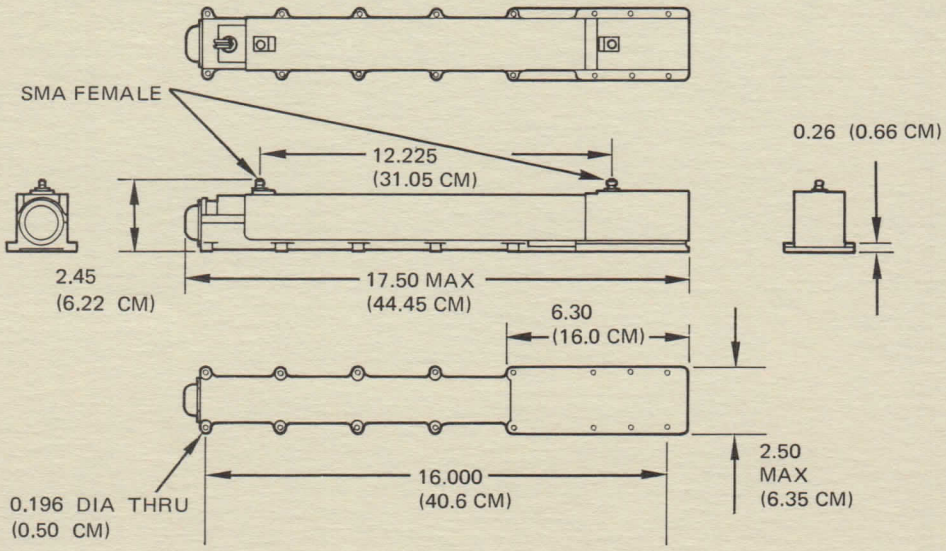

HUGHES
HUGHES AIRCRAFT COMPANY
ELECTRON DYNAMICS DIVISION 3100 West Lomita Boulevard, Torrance, California 90509, Tel (213) 534-2121

Printed in U.S.A. 9-78 AL

HUGHES

HUGHES AIRCRAFT COMPANY

ELECTRON DYNAMICS DIVISION

280H

10 W 10.5-13 GHz CW TWT

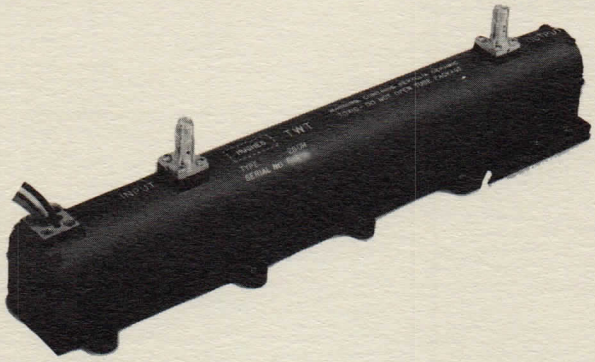

DESCRIPTION

The Hughes Model 280H Traveling-wave Tube was designed for long life operation in space communications applications. The tube features small size, light weight, rugged design and high efficiency performance with low distortion characteristics, while still meeting the stringent requirements of space communications environments.

SPECIFICATIONS*

Frequency	10.5 – 13 GHz
Power Output	10 W
Duty	CW
Gain (saturation)	54 dB
Efficiency	33%
Beam Voltage	3000 V
Beam Current	29 mA
Anode Voltage	200 V
Anode Current	< 0.01 mA
Noise Figure	30 dB
Heater Voltage	4.5 V
Heater Current	260 mA
Construction	metal ceramic
Cooling	conduction
Focusing	PPM
Weight	20 ounces (56.7 g)
Length	< 10 inches (25.4 cm)
Connectors	SMA
Expected Life	10 years

ENVIRONMENTAL

The tube is designed to meet conditions typical of spacecraft launch and operating environment.

*Subject to change without prior notice.

280H

10 W 10.5-13 GHz CW TWT

HUGHES

HUGHES AIRCRAFT COMPANY

ELECTRON DYNAMICS DIVISION

TYPICAL PERFORMANCE CURVES

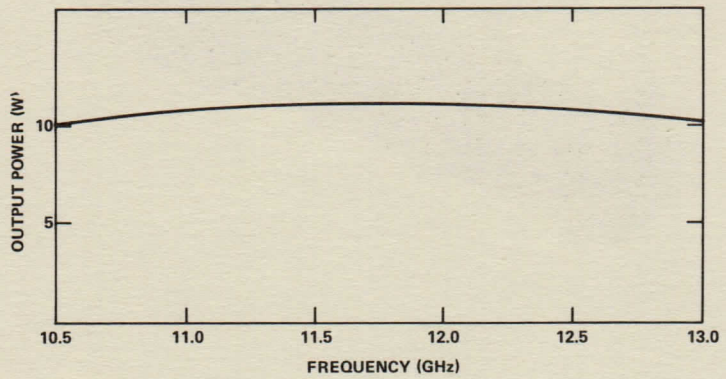

OUTLINE DRAWING

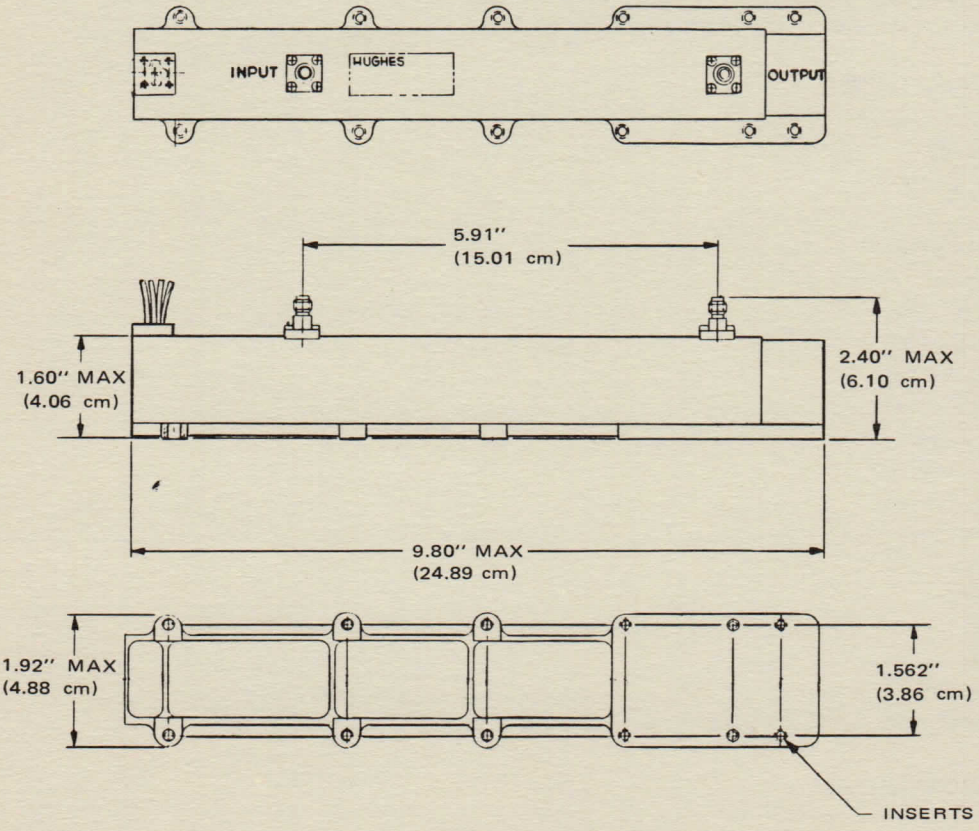

HUGHES ELECTRON DYNAMICS DIVISION 3100 West Lomita Boulevard, Torrance, California 90509, Tel (213) 534-2121

HUGHES AIRCRAFT COMPANY

Printed in U.S.A.—8-76

HUGHES

ELECTRON DYNAMICS DIVISION

285H

20W 8.4-8.5 GHz CW TWT

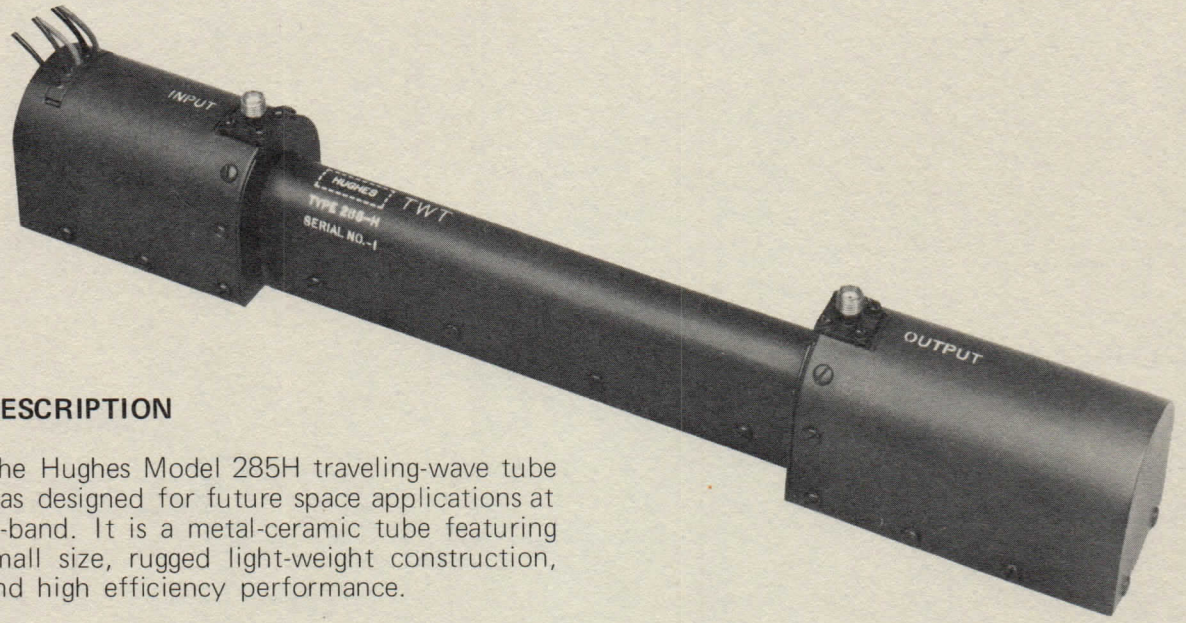

DESCRIPTION

The Hughes Model 285H traveling-wave tube was designed for future space applications at X-band. It is a metal-ceramic tube featuring small size, rugged light-weight construction, and high efficiency performance.

SPECIFICATIONS

Frequency	8.4 – 8.5 GHz
Power Output	24 ±2W
Duty	CW
Gain (Saturation)	37 dB minimum
Efficiency	46% typical, 44% minimum
Beam Voltage	3100 – 3400 V
Beam Current	36 mA typical
Anode Voltage	100 V typical
Anode Current	0.3 mA maximum
Heater Voltage	5.4 V maximum
Heater Current	370 mA maximum
Construction	metal-ceramic
Cooling	conduction
Focusing	PPM
Weight	36 ounces
Length	11.8 inches
Connectors	OSM
Expected Life	>10 years
Warranted Life	1 year

NOTE: This tube operates efficiently at other frequencies at slightly different values of cathode voltage.

ENVIRONMENTAL

The tube is designed to meet environmental conditions typical of a spacecraft such as the Mariner and the Pioneer series.

285H

20W 8.4-8.5 GHz CW TWT

HUGHES

ELECTRON DYNAMICS DIVISION

PERFORMANCE CURVES

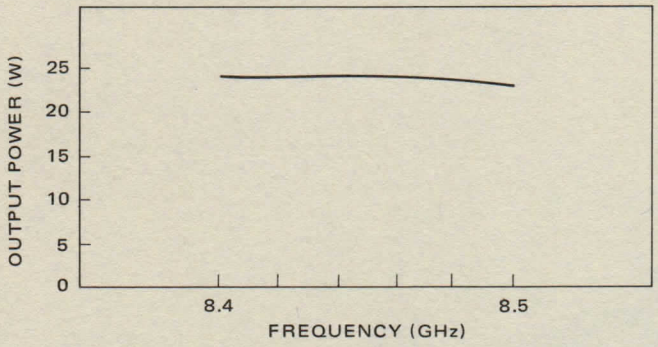

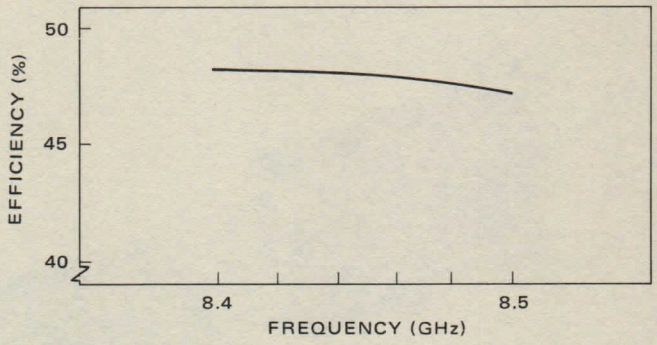

OUTLINE & MOUNTING

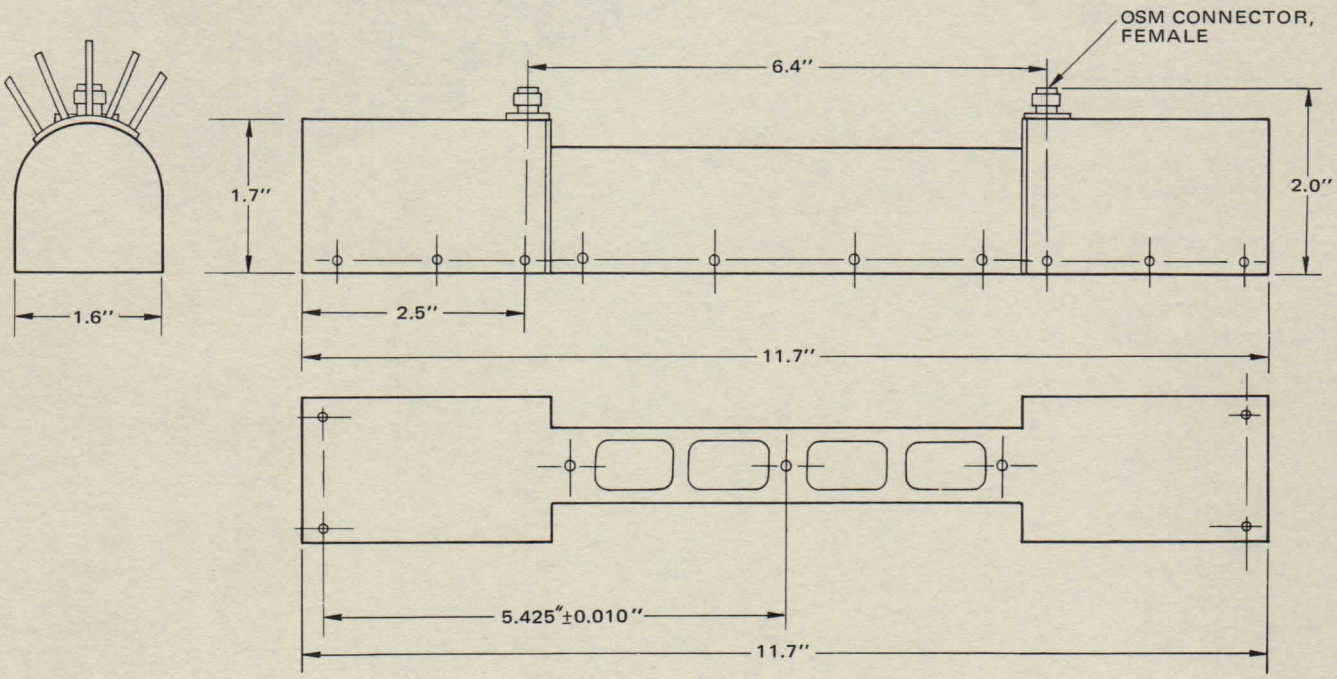

YOUR LOCAL REPRESENTATIVE

HUGHES
HUGHES AIRCRAFT COMPANY
ELECTRON DYNAMICS DIVISION / 3100 W. LOMITA BLVD. TORRANCE, CA. 90509/TEL (213) 534-2121

LITHO IN U.S.A. – 12-72

HUGHES

HUGHES AIRCRAFT COMPANY

ELECTRON DYNAMICS DIVISION

287H

50W 7.9–8.4 GHz CW TWT

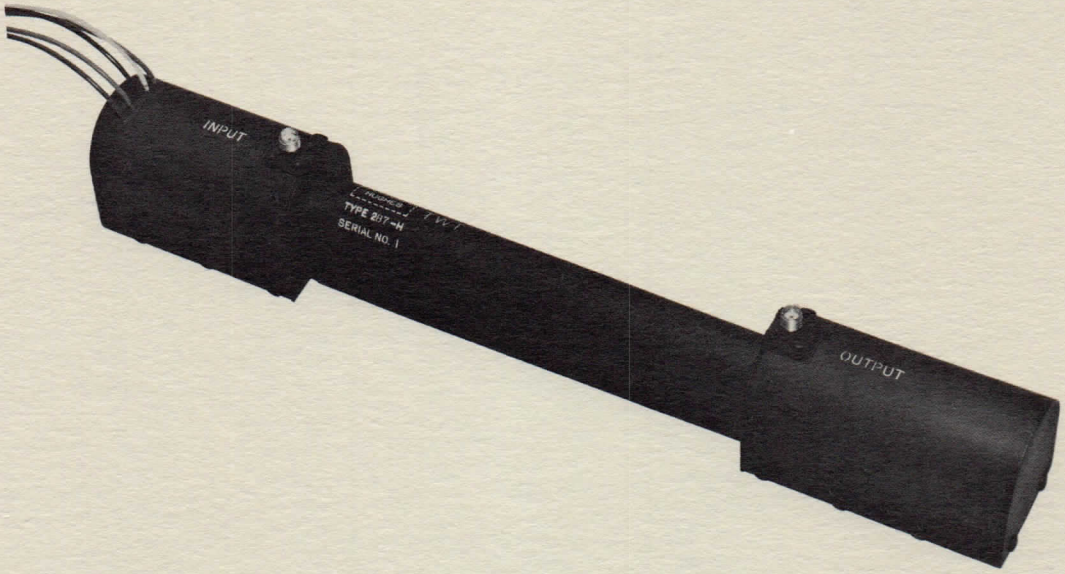

DESCRIPTION

The Hughes Model 287H traveling-wave tube was designed for future X-band applications. It is a metal-ceramic tube featuring small size, rugged lightweight construction, and high efficiency performance.

SPECIFICATIONS

Frequency	7.9–8.4 GHz
Power Output	50 W
Duty	CW
Gain (Saturation)	33 dB minimum
Efficiency	50% nominal
Beam Voltage	4250 V nominal
Beam Current	57 mA typical
Anode Voltage	100 V typical
Anode Current	0.3 mA maximum
Heater Voltage	5.4 V maximum
Heater Current	370 mA maximum
Construction	metal-ceramic
Cooling	conduction
Focusing	PPM
Weight	36 ounces
Length	11.8 inches
Connectors	OSM
Expected Life	>7 years

Note: This tube operates efficiently at other frequencies at slightly different values of cathode voltage.

287H

50W 7.9 - 8.4 GHz CW TWT

HUGHES

HUGHES AIRCRAFT COMPANY

ELECTRON DYNAMICS DIVISION

PERFORMANCE CURVES

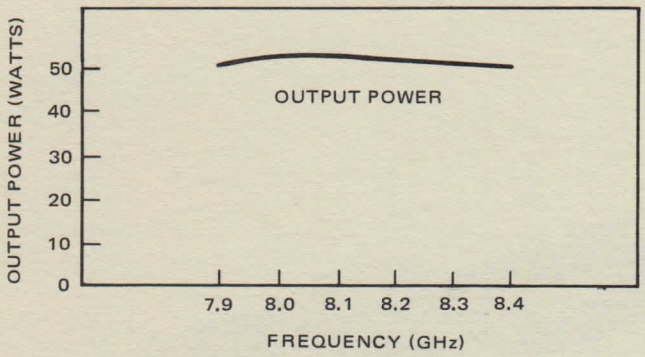

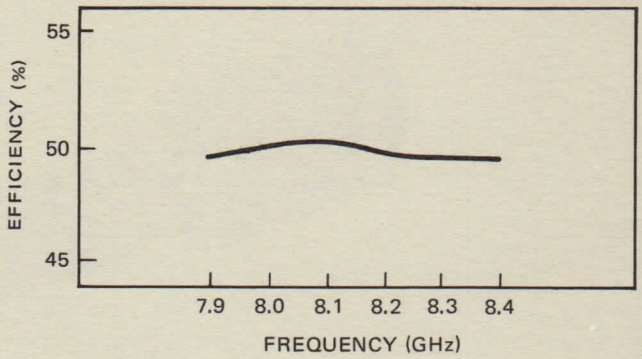

OUTLINE & MOUNTING

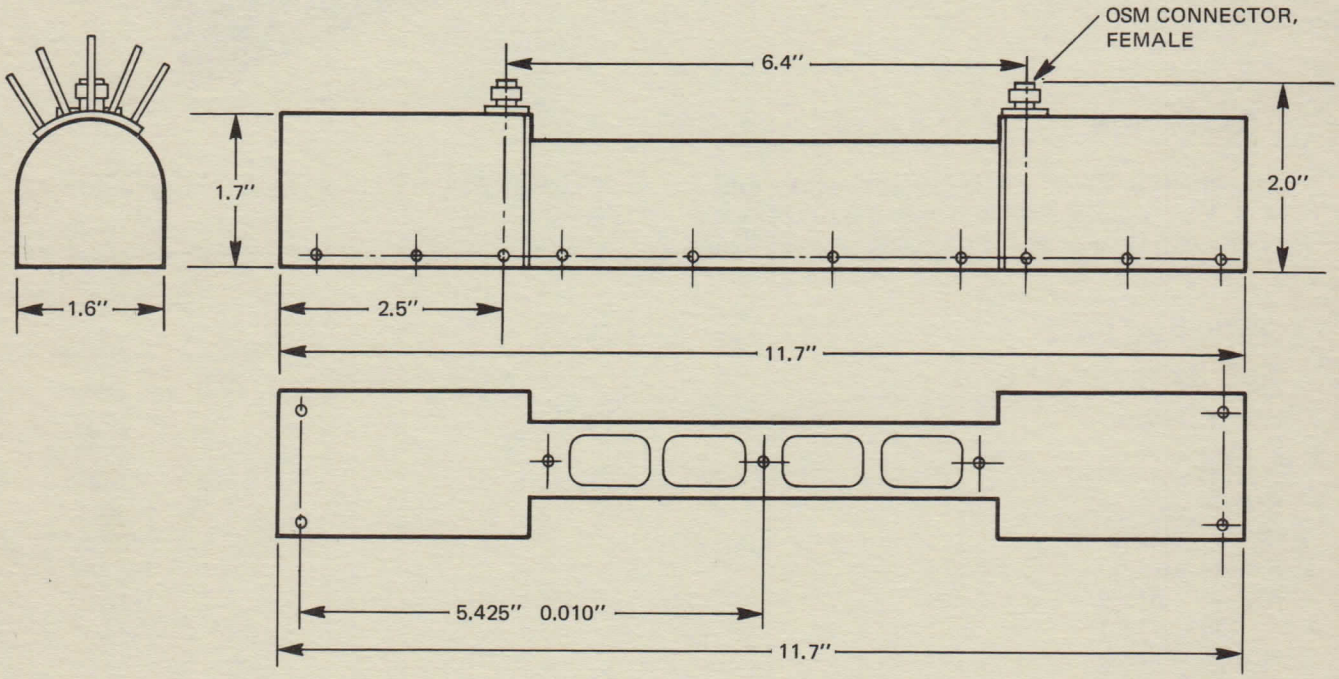

YOUR LOCAL REPRESENTATIVE

HUGHES
HUGHES AIRCRAFT COMPANY
ELECTRON DYNAMICS DIVISION / 3100 W. LOMITA BLVD. TORRANCE, CA. 90509/TEL (213) 534-2121

Printed in U.S.A.– 4-73

HUGHES

HUGHES AIRCRAFT COMPANY

ELECTRON DYNAMICS DIVISION

291H

1.5-1.6 GHz Three Power Levels CW TWT

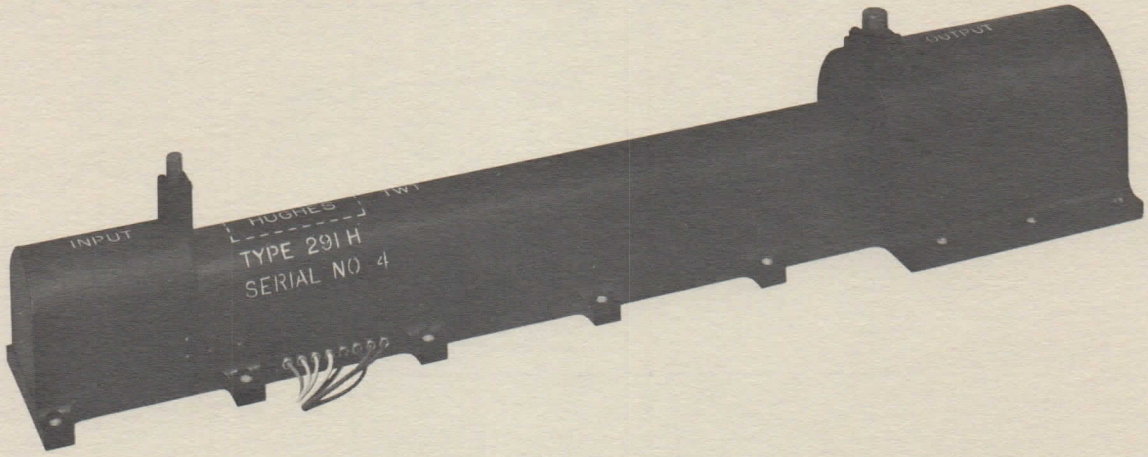

DESCRIPTION

The Hughes Model 291H is a L-band long life traveling-wave tube designed for space applications. The 291H features triple mode, narrow band operation with high efficiency. The rugged metal-ceramic design and unique operating features were designed for the Maritime Communications satellite (MARISAT).

SPECIFICATIONS

Frequency	1.5 - 1.6 GHz
Power Output	7 W, 26 W, 60 W
Duty	CW
Gain (saturation)	23 dB, 33 dB, 47 dB
Efficiency	25%, 50%, 47%
Beam Voltage	-2630 V
Beam Current	14 mA, 27 mA, 57 mA
Anode Voltage	100V
Anode Current	0.03 mA
Heater Voltage	6.0 V
Heater Current	425 mA
Construction	metal-ceramic
Cooling	conduction
Focusing	PPM
Weight	144 ounces (4.08 kg)
Length	21 inches (53.34 cm)
Connectors	OSM-TNC
Expected Life	10 years

291H

1.5-1.6 GHz Three Power Levels CW TWT

HUGHES

HUGHES AIRCRAFT COMPANY

ELECTRON DYNAMICS DIVISION

TYPICAL PERFORMANCE CURVE

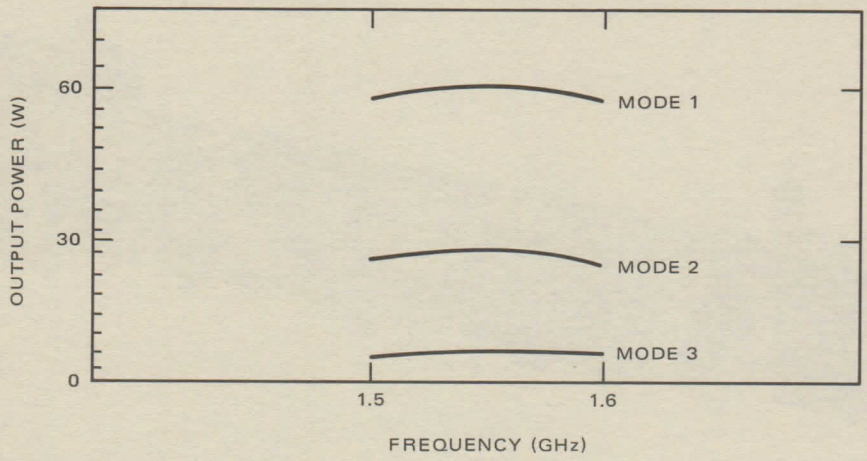

OUTLINE DRAWING

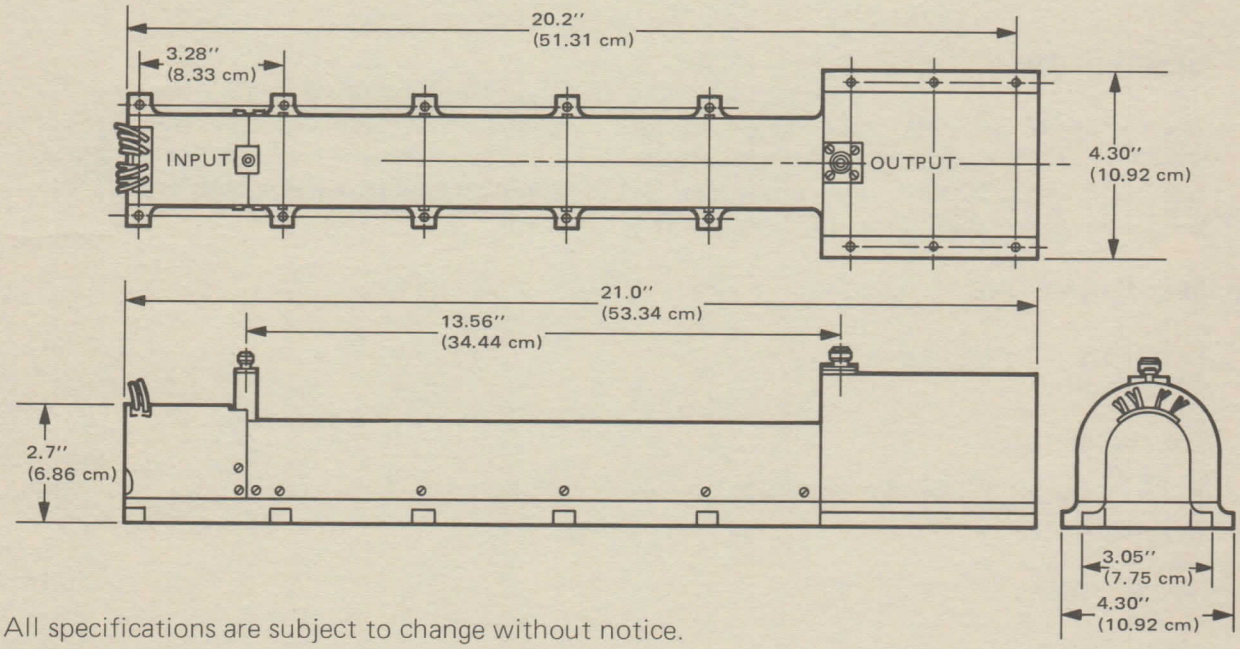

All specifications are subject to change without notice.

YOUR LOCAL REPRESENTATIVE

HUGHES ELECTRON DYNAMICS DIVISION 3100 West Lomita Boulevard, P.O. Box 2999, Torrance, California 90509, Tel (213) 517-6000

HUGHES AIRCRAFT COMPANY

Printed in U.S.A. 6/83 AL

HUGHES

HUGHES AIRCRAFT COMPANY

ELECTRON DYNAMICS DIVISION

293H

40 W 7-8 GHz CW TWT

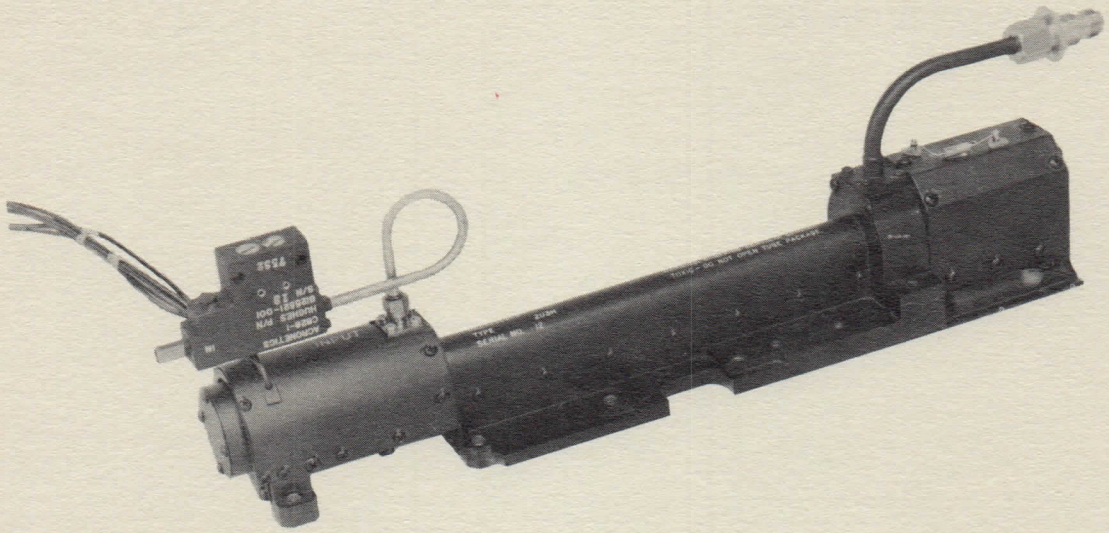

DESCRIPTION

The Hughes Model 293H is an X-Band long-life high-efficiency traveling-wave tube for the Defense Systems Communication Satellite (DSCS-III). The metal ceramic construction of this tube provides a light-weight, rugged package for space applications and was specifically designed for the stringent RF characteristics required for communication devices.

SPECIFICATIONS *

Frequency	7 - 8 GHz
Power Output	40 W minimum
Duty	CW
Gain (Saturation)	53 dB minimum
Efficiency	40%
Beam Voltage	–4000 V
Beam Current	53 mA
Anode Voltage	100 V
Anode Current	.1 mA
Noise Figure	33 dB maximum
Heater Voltage	5.8 V
Heater Current	410 mA
Construction	metal ceramic
Cooling	conduction
Focusing	PPM
Weight	58 ounces (1.64 kg)
Length	13.25 inches (33.65 cm)
Input Connectors	SMA
Output Connectors	TNC
Expected Life	7 years

* All specifications are subject to change without prior notice.

293H

40 W 7-8 GHz CW TWT

HUGHES

HUGHES AIRCRAFT COMPANY

ELECTRON DYNAMICS DIVISION

TYPICAL PERFORMANCE CURVE

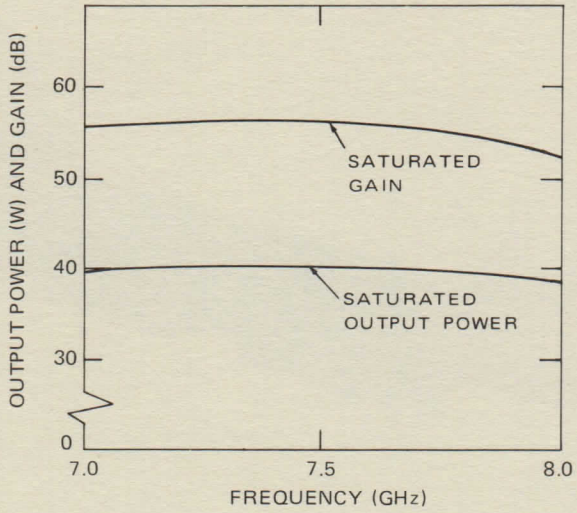

OUTLINE DRAWING

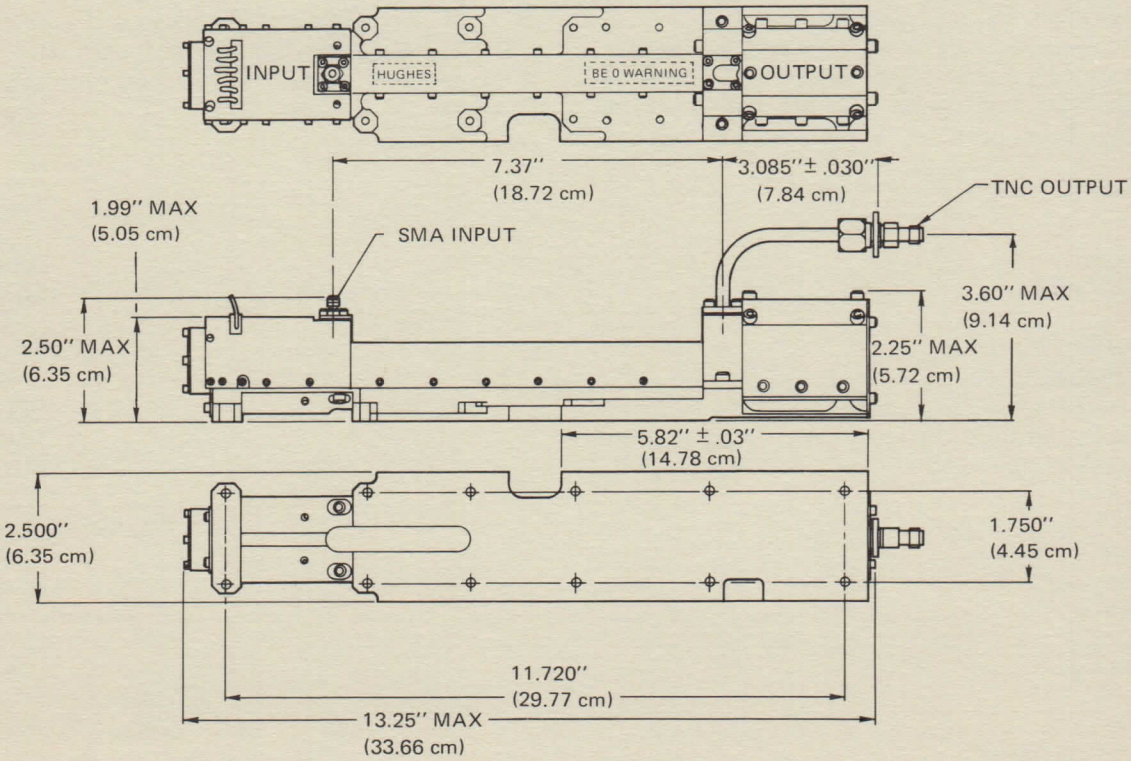

HUGHES
HUGHES AIRCRAFT COMPANY
ELECTRON DYNAMICS DIVISION MICROWAVE TRAVELING-WAVE TUBE PRODUCTS 3100 West Lomita Boulevard, Torrance, California 90509, Tel (213) 534-2121

Printed in U.S.A. 11-76

HUGHES

HUGHES AIRCRAFT COMPANY

ELECTRON DYNAMICS DIVISION

294H

100 W 12.0 GHz CW TWT

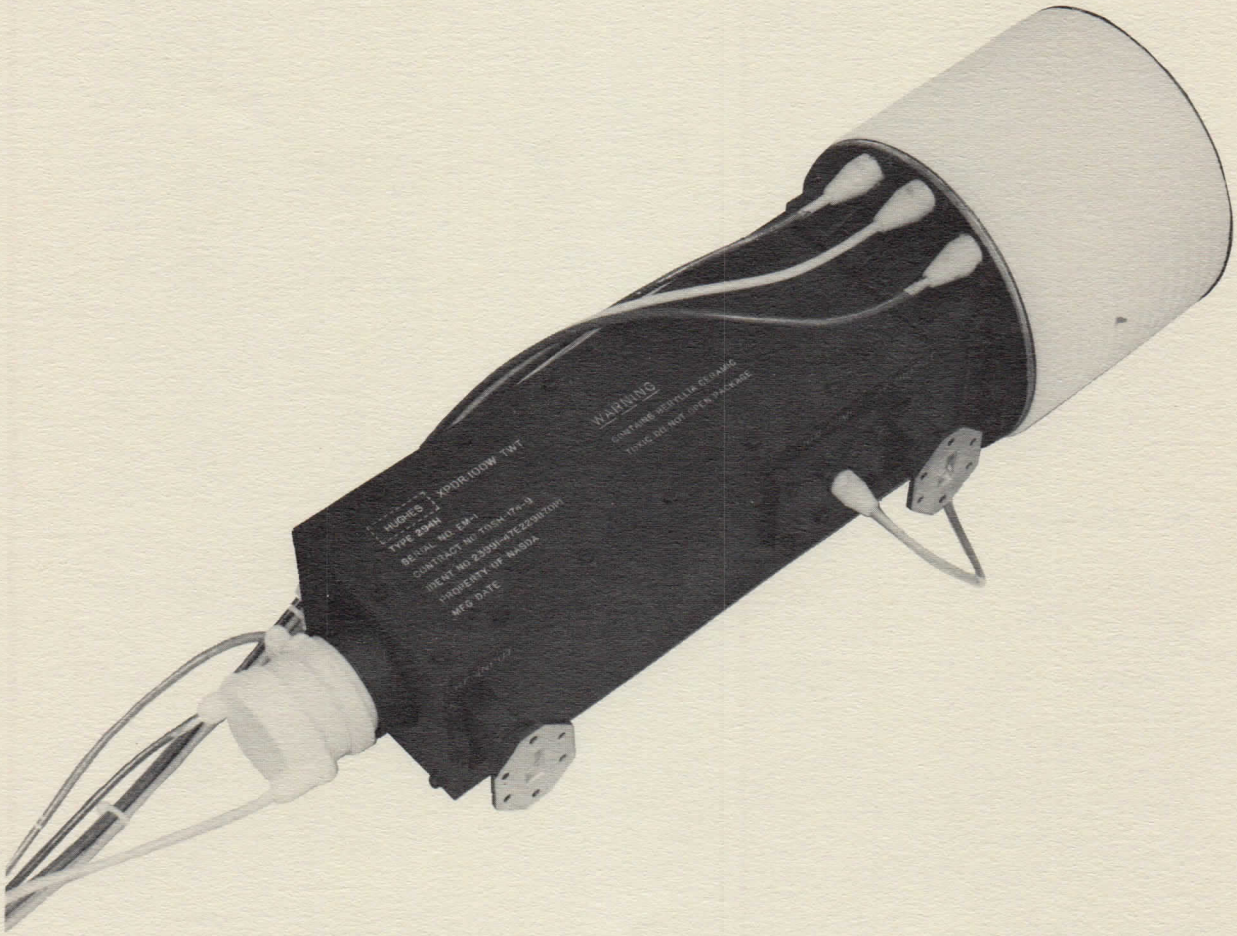

DESCRIPTION

The Hughes Model 294H is a long—life traveling-wave tube designed for spacecraft environments. This tube incorporates the latest techniques for efficiency enhancement. The high efficiency achieved conserves primary spacecraft power and reduces thermal loading on the satellite. The 294H utilizes a minimum of conduction cooling. Its primary cooling is by radiation from the collector cover to deep space. The tube is designed to operate in excess of 30,000 hours.

Modified versions of this tube are offered at other power levels in accordance with system requirements.

SPECIFICATIONS*

ELECTRICAL PARAMETERS	MINIMUM	TYPICAL	MAXIMUM
Cathode Voltage	−7.7 kV	−8.0 kV	−8.4 kV
Cathode Current	53 mA	56 mA	63 mA
Collector Voltage No. 1	−2.5 kV	−3.1 kV	−3.5 kV
Collector Voltage No. 2	−3.1 kV	−3.6 kV	−4.1 kV
Collector Voltage No. 3	−5.7 kV	−6.0 kV	−6.6 kV
Collector Current No. 1	0.5 mA	14 mA	25 mA
Collector Current No. 2	0.5 mA	19 mA	30 mA
Collector Current No. 3	10 mA	19 mA	60 mA
Anode Voltage	50 V	150 V	550 V
Anode Current	0 mA	0.01 mA	0.2 mA
Heater Voltage	2.9 V	3.4 V	3.9 V
Heater Current	1.2 A	1.5 A	1.8 A
Pump Voltage	3.0 Ku	3.3 Ku	3.6 Ku
Pump Current	0.0 μA	0.1 μA	5.0 μA
RF PARAMETERS			
Output Power	100 W	120 W	135 W
Saturated Gain	40 dB	—	—
Duty	—	CW	—
Frequency	11.95 GHz	—	12.13 GHz
Phase Sensitivity (E_k)	—	—	0.9°/V
Phase Sensitivity (E_a)	—	—	0.035°/V
Phase Sensitivity (E_{bn})	—	—	0.01°/V
Amplitude Sensitivity (E_k)	—	—	0.01 dB/V
Amplitude Sensitivity (E_a)	—	—	0.015 dB/V
Amplitude Sensitivity (E_{bn})	—	—	0.0001 dB/V
MECHANICAL			
Size	—	—	21 in. (53.3 cm)
Weight	—	—	15.0 lbs (6.8 kg)
Cooling:			
Body	—	—	conduction
Collector	—	—	radiation
Waveguide:			
Input	—	—	WR-75
Output	—	—	WR-75

*All specifications are subject to change without prior notice.

TYPICAL PERFORMANCE CURVES

OUTPUT POWER VERSUS FREQUENCY
AT CONSTANT RF INPUT DRIVE

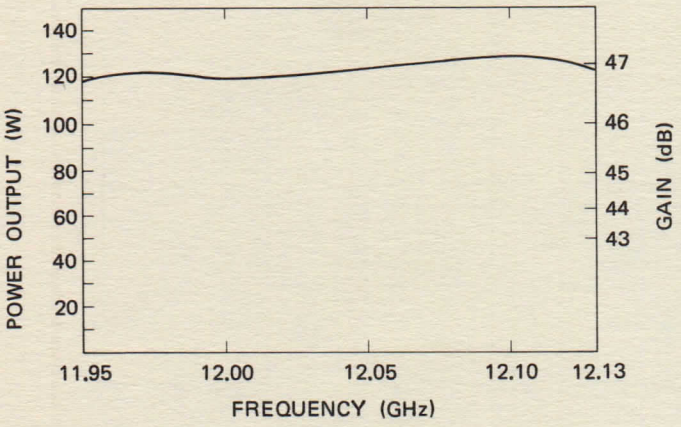

OVERALL EFFICIENCY VERSUS FREQUENCY

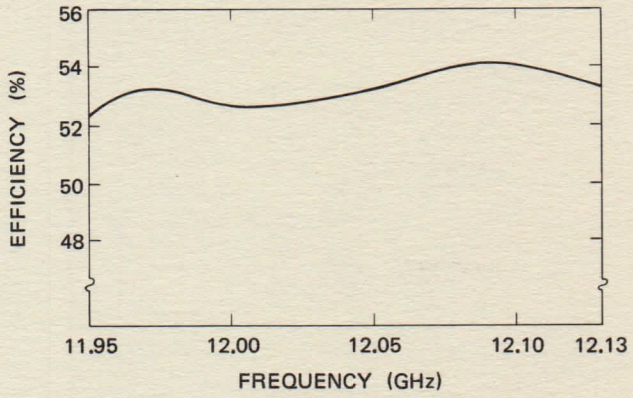

PHASE VERSUS FREQUENCY
AT SATURATION

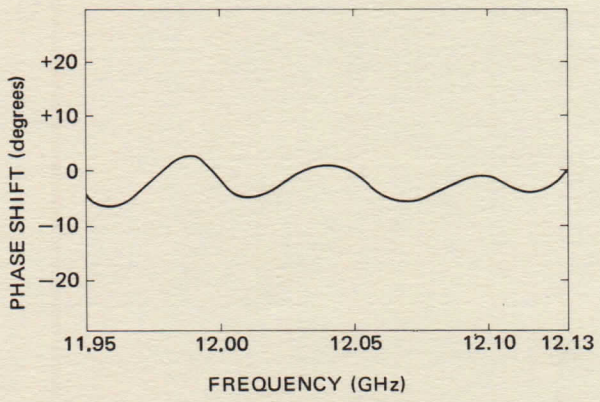

CURRENT DISTRIBUTION
VERSUS RF DRIVE

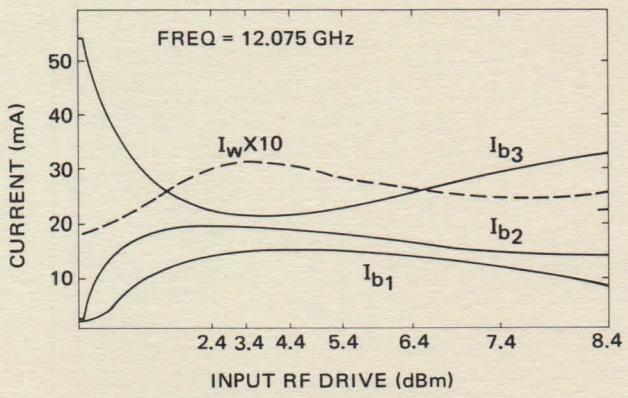

294H

100 W 12.0 GHz CW TWT

HUGHES

HUGHES AIRCRAFT COMPANY

ELECTRON DYNAMICS DIVISION

OUTLINE DRAWING

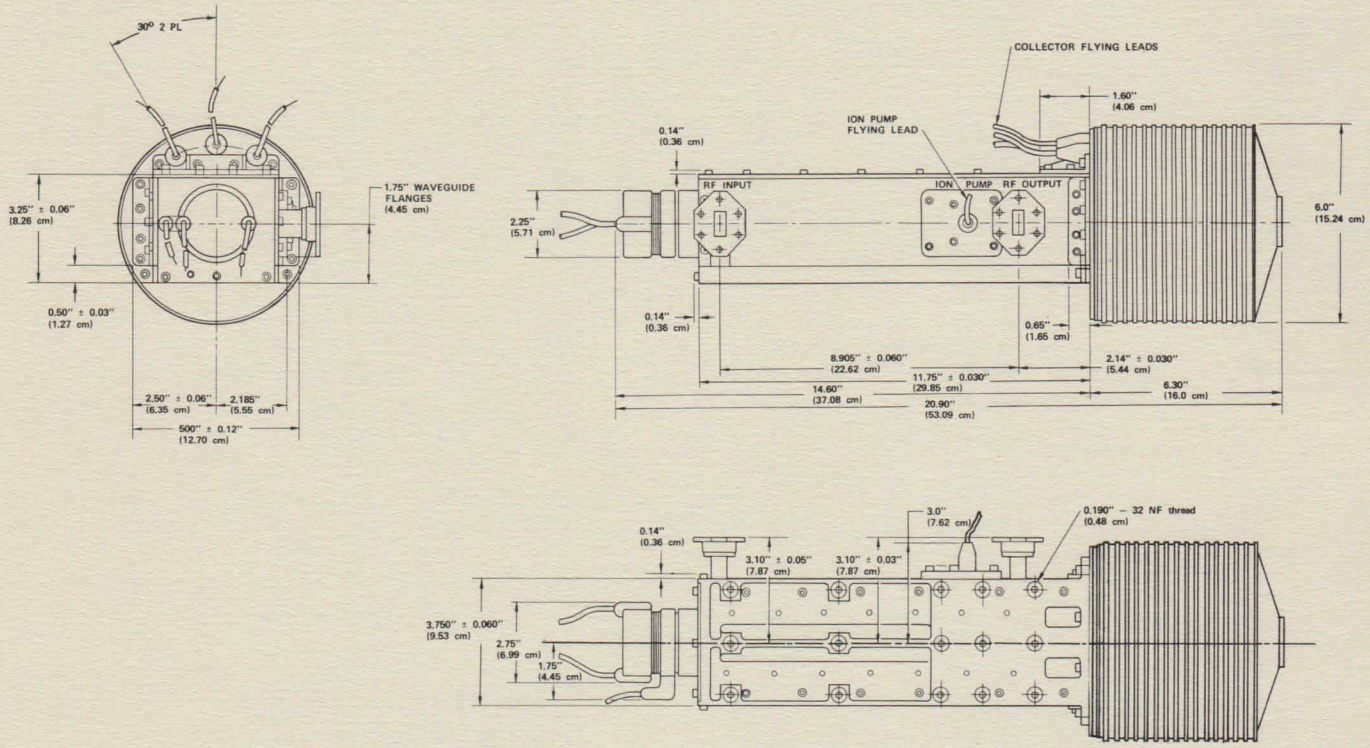

HUGHES ELECTRON DYNAMICS DIVISION MICROWAVE TRAVELING-WAVE TUBE PRODUCTS 3100 West Lomita Boulevard, Torrance, California 90509, Tel (213) 534-2121

HUGHES AIRCRAFT COMPANY

Printed in U.S.A. 7-75

HUGHES

HUGHES AIRCRAFT COMPANY

ELECTRON DYNAMICS DIVISION

296H

5 W 3.7-4.2 GHz CW TWT

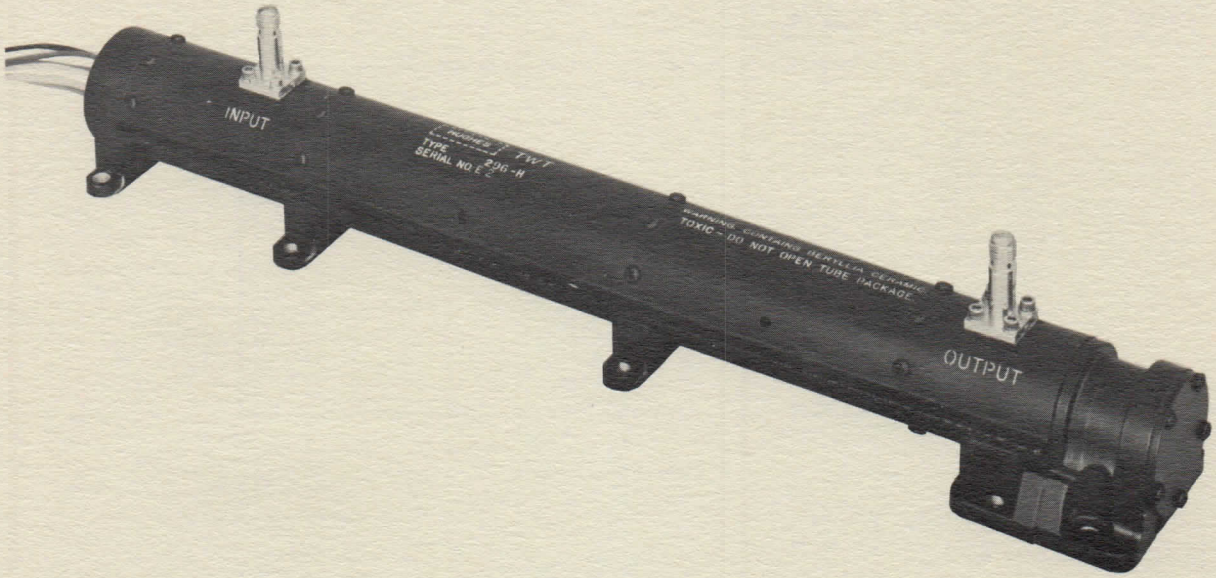

DESCRIPTION

The Hughes Model 296H traveling-wave tube was designed for high gain to be used on the RCA Satcom satellite. The tube package is light-weight and designed for low RFI leakage and susceptibility. The 296H is constructed with vertically aligned input and output RF connectors.

SPECIFICATIONS

Frequency	3.7 - 4.2 GHz
Power Output	5 W minimum
Duty	CW
Gain (saturation)	55 dB
Efficiency	36%
Beam Voltage	-1280 V
Beam Current	21 mA
Anode Voltage	200 V
Anode Current	0.005 mA
Heater Voltage	4.5 V
Heater Current	260 mA
Construction	metal-ceramic
Cooling	conduction
Focusing	PPM
Weight	22 ounces (623.68 gr)
Length	12.10 inches (30.73 cm)
Connectors	SMA
Expected Life	10 years

296H

5 W 3.7-4.2 GHz CW TWT

HUGHES

HUGHES AIRCRAFT COMPANY

ELECTRON DYNAMICS DIVISION

TYPICAL PERFORMANCE CURVE

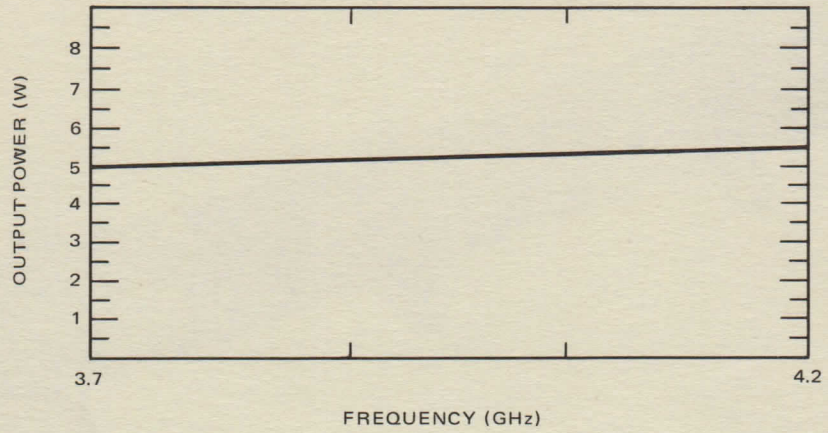

OUTLINE DRAWING

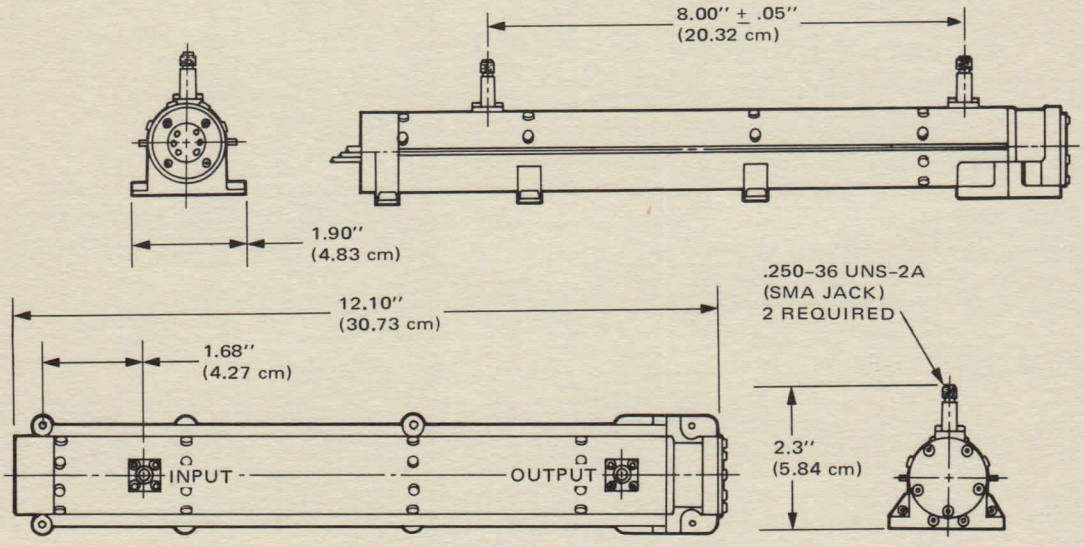

All specifications are subject to change without prior notice.

YOUR LOCAL REPRESENTATIVE

HUGHES
HUGHES AIRCRAFT COMPANY
ELECTRON DYNAMICS DIVISION MICROWAVE TRAVELING-WAVE TUBE PRODUCTS 3100 West Lomita Boulevard, Torrance, California 90509, Tel (213) 534-2121

Printed in U.S.A.—12—74

HUGHES

HUGHES AIRCRAFT COMPANY

ELECTRON DYNAMICS DIVISION

298H

10 W 7.0 - 8.0 GHz CW TWT

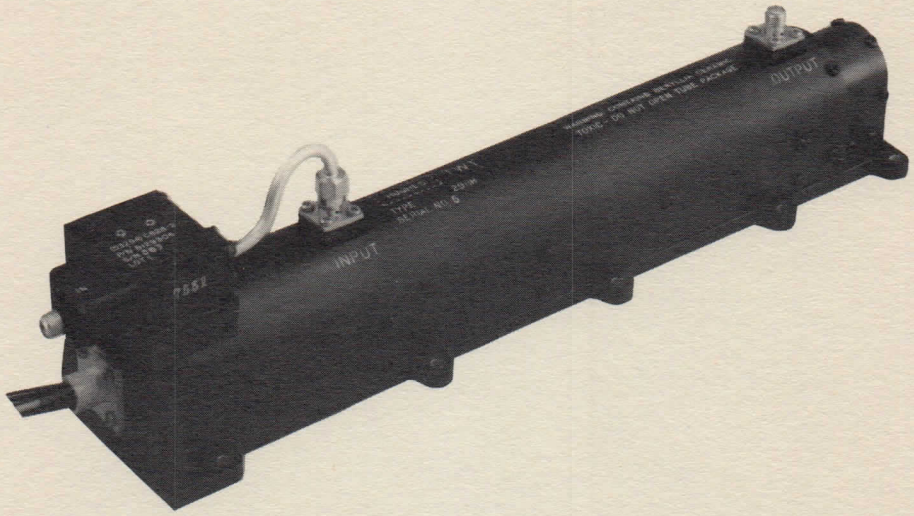

DESCRIPTION

The Hughes Model 298H is a space qualified, long life traveling-wave tube designed and built for the DSCS III Military Communication satellites.

The 298H utilizes metal-ceramic construction with PPM focusing to provide a rugged, light-weight package.

SPECIFICATIONS*

Frequency	7.0–8.0 GHz
Power Output	10 W minimum
Duty	CW
Gain (saturation)	50 dB minimum
Efficiency (typical)	37%
Beam Voltage	– 2600 V
Beam Current	26 mA
Anode Voltage	150 V
Heater Voltage	5.2 V
Heater Current	280 mA
Construction	metal ceramic
Cooling	conduction
Focusing	PPM
Weight	24 ounces (680 g)
Length	10.3 inches (26 cm)
Connectors	SMA
Expected Life	10 years

*Subject to change without prior notice.

298H

10 W 7.0 - 8.0 GHz CW TWT

HUGHES

HUGHES AIRCRAFT COMPANY

ELECTRON DYNAMICS DIVISION

TYPICAL PERFORMANCE CURVES

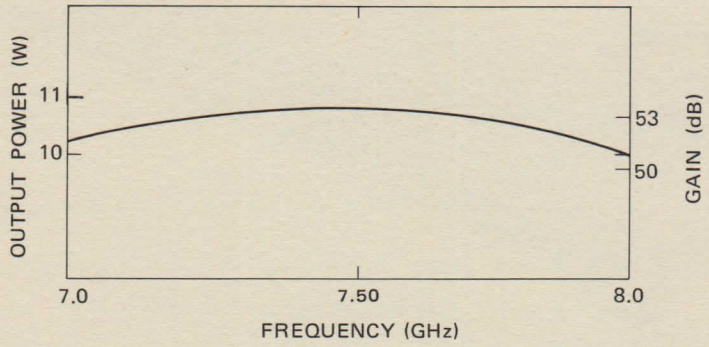

OUTLINE DRAWING

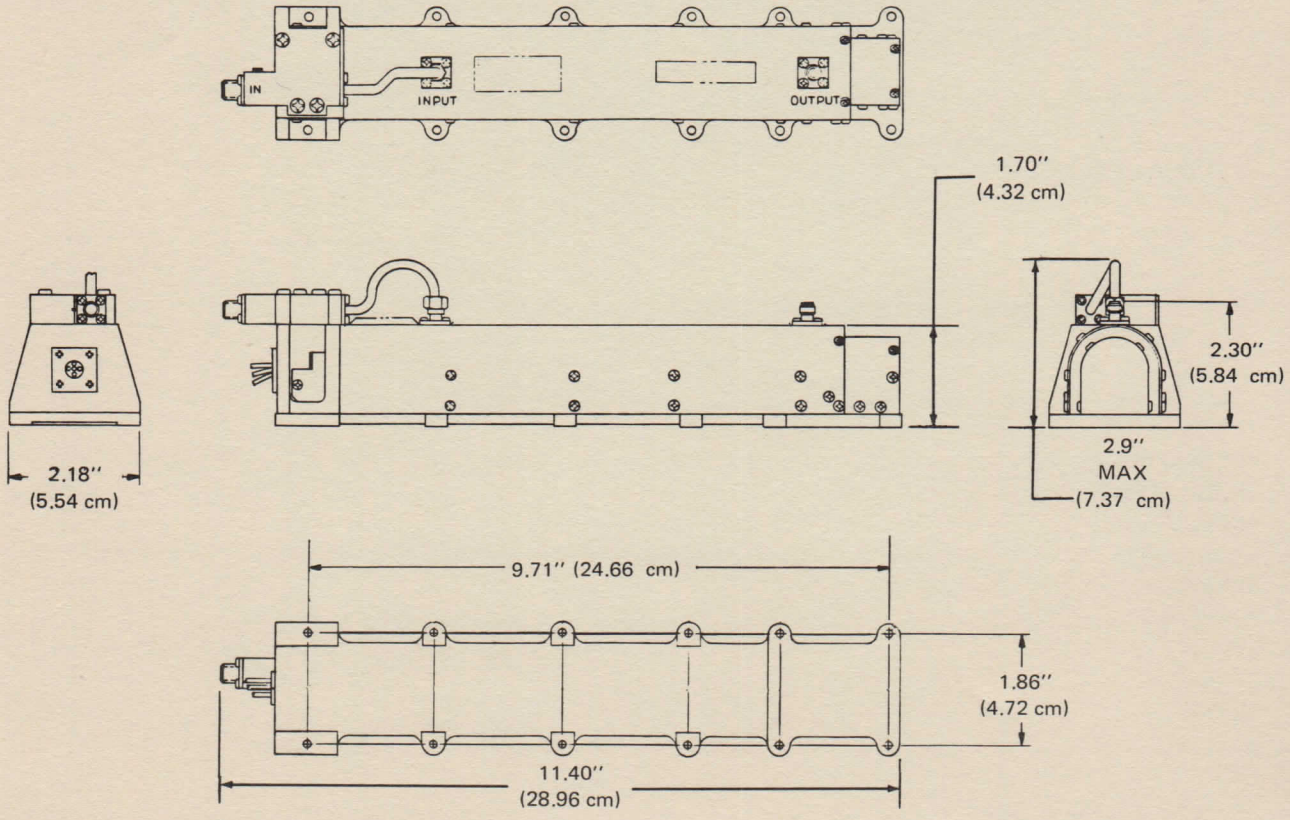

HUGHES AIRCRAFT COMPANY ELECTRON DYNAMICS DIVISION 3100 West Lomita Boulevard, Torrance, California 90509, Tel (213) 534-2121

Printed in U.S.A.—8-76

HUGHES

ELECTRON DYNAMICS DIVISION

307H

Environmentalized 50kW X-BAND Pulse TWT

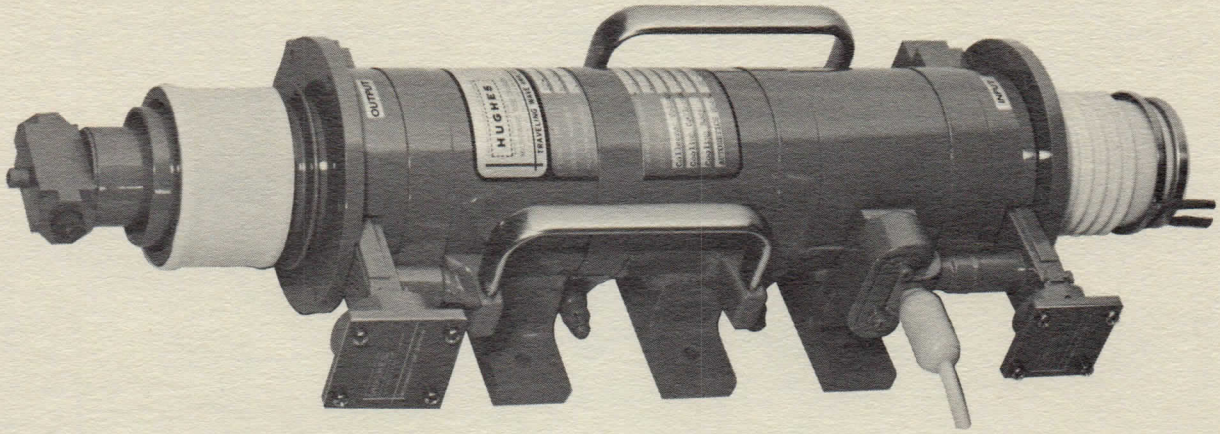

DESCRIPTION

The 307H is a broadband, high power traveling-wave tube. This production type has high efficiency with high gain per unit length; 50kW peak power is attained in this lightweight, periodic permanent magnet focused TWT. It is designed to meet MIL-E-5400 Class 1A specifications.

SPECIFICATIONS

FREQUENCY*	8.5 – 9.5 GHz
POWER OUTPUT	50 kW
DUTY	1%
GAIN, SATURATION	50 dB
CATHODE VOLTAGE	–36 kV
CATHODE CURRENT	10.3 A
COLLECTOR DEPRESSION VOLTAGE	–14 kV
HEATER VOLTAGE	9.5 V
HEATER CURRENT	5.2 A
COOLING – COLLECTOR	2.0 GPM H_2O or equivalent
BODY	2.0 GPM H_2O or equivalent
LENGTH	21 inches
WEIGHT	30 pounds

*This is a typical frequency band; the tube can be made with center frequency anywhere in x-band as required.

307H

Environmentalized 50kW X-BAND Pulse TWT

HUGHES

ELECTRON DYNAMICS DIVISION

PERFORMANCE CURVE

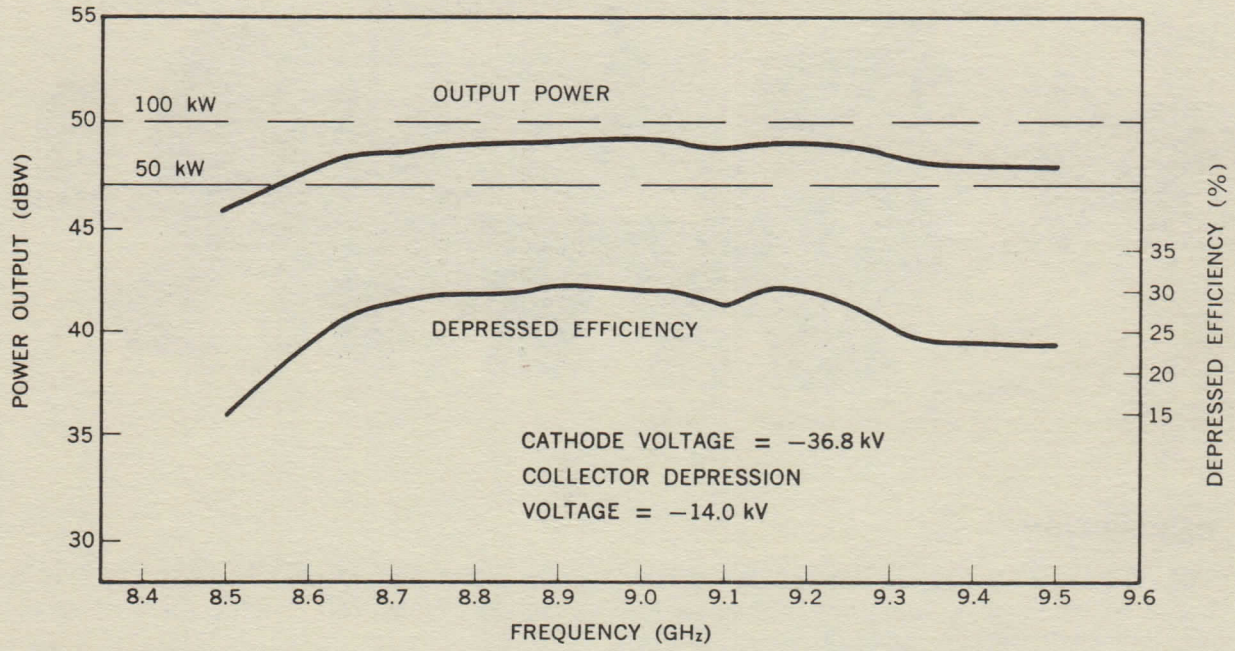

OUTLINE AND MOUNTING DRAWING

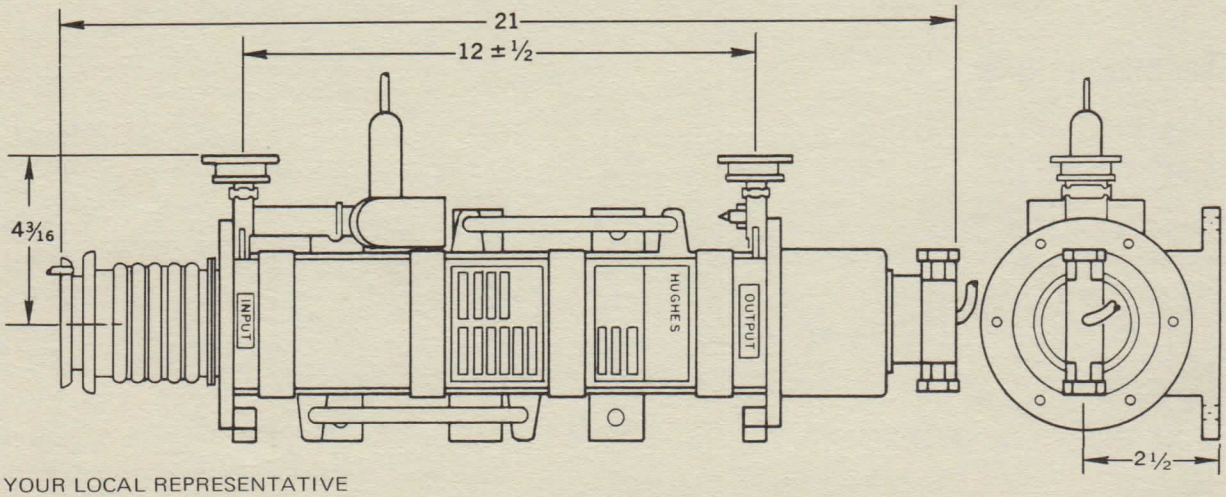

YOUR LOCAL REPRESENTATIVE

HUGHES
HUGHES AIRCRAFT COMPANY

ELECTRON DYNAMICS DIVISION / 3100 W. LOMITA BLVD. TORRANCE, CA. 90509 / TEL (213) 534-2121

Printed in U.S.A. – 7-71

HUGHES

HUGHES AIRCRAFT COMPANY

ELECTRON DYNAMICS DIVISION

308H

X-Band Pulsed TWT

FEATURES

- 20 kW Peak Power
- Broadband
- Shadow Grid Modulation
- High Gain
- PPM Focusing
- Forced Air Cooling
- Environmentalized*

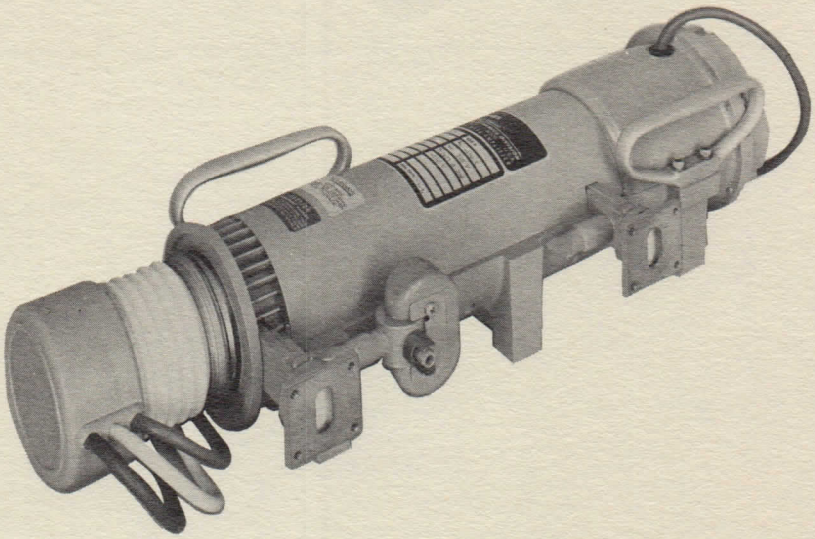

PERFORMANCE SPECIFICATIONS	MINIMUM	TYPICAL	MAXIMUM
Frequency	8.6 GHz	—	9.5 GHz
Output Power	20 kW	25 kW	—
Saturated Gain	46 dB	50 dB	—
Duty	—	—	1%
ELECTRICAL PARAMETERS			
Cathode Voltage	−23.5 kV	−24.5 kV	−25.5 kV
Cathode Current	5.4 A	6.0 A	6.7 A
Body Voltage	—	ground	—
Body Current (with RF)	—	0.5 A	0.9 A
Collector Voltage	—	ground	—
Collector Current (with RF)	4.9 A	5.5 A	6.7 A
Heater Voltage (dc or ac)	9.5 V	10.5 V	11.5 V
Heater Current	2.5 A	3.4 A	4.5 A
Grid Drive	300 V	375 V	450 V
Grid Bias	−350 V	−400 V	−450 V
Grid Current	—	10 mA	70 mA
Ion Pump Voltage	+3.0 kV	+3.3 kV	+3.6 kV
Ion Pump Current	—	$<5\ \mu A$	1 mA
MECHANICAL SPECIFICATIONS			
Weight	—	21 pounds	—
Cooling:			
Coolant Type	—	forced air	—
Flow Rate	120 cfm	—	—
Pressure Drop	—	—	6 inches H_2O

*Designed to meet MIL-E-5400 Class 2

308H

X-Band Pulsed TWT

HUGHES

HUGHES AIRCRAFT COMPANY

ELECTRON DYNAMICS DIVISION

TYPICAL PERFORMANCE CURVE

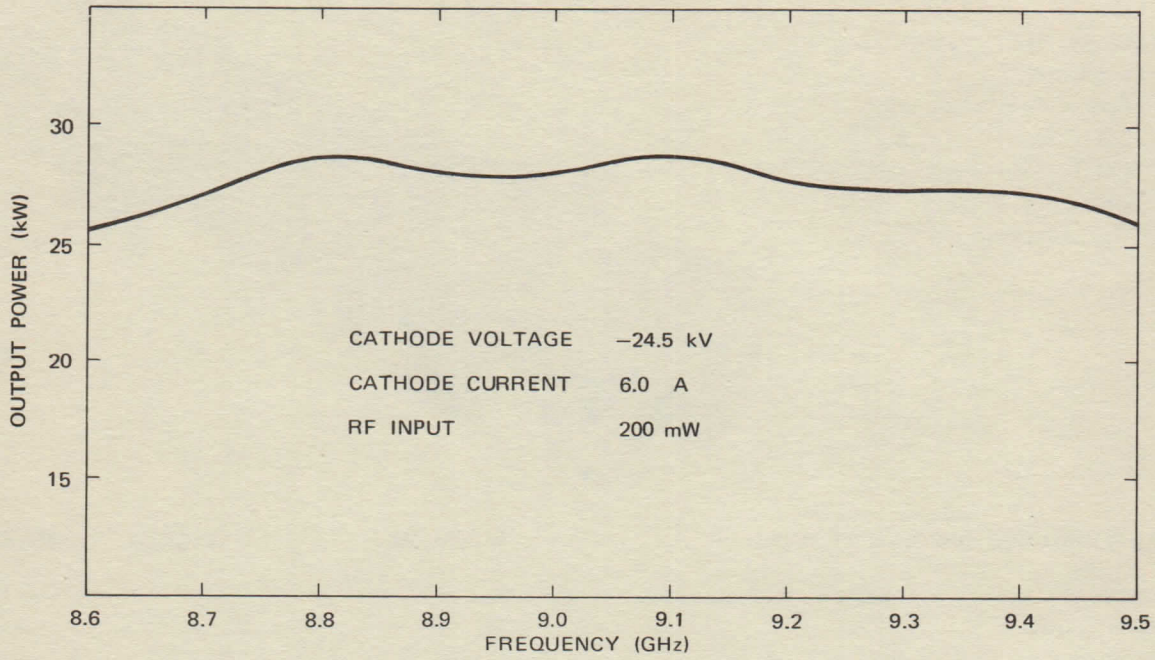

OUTLINE DRAWING

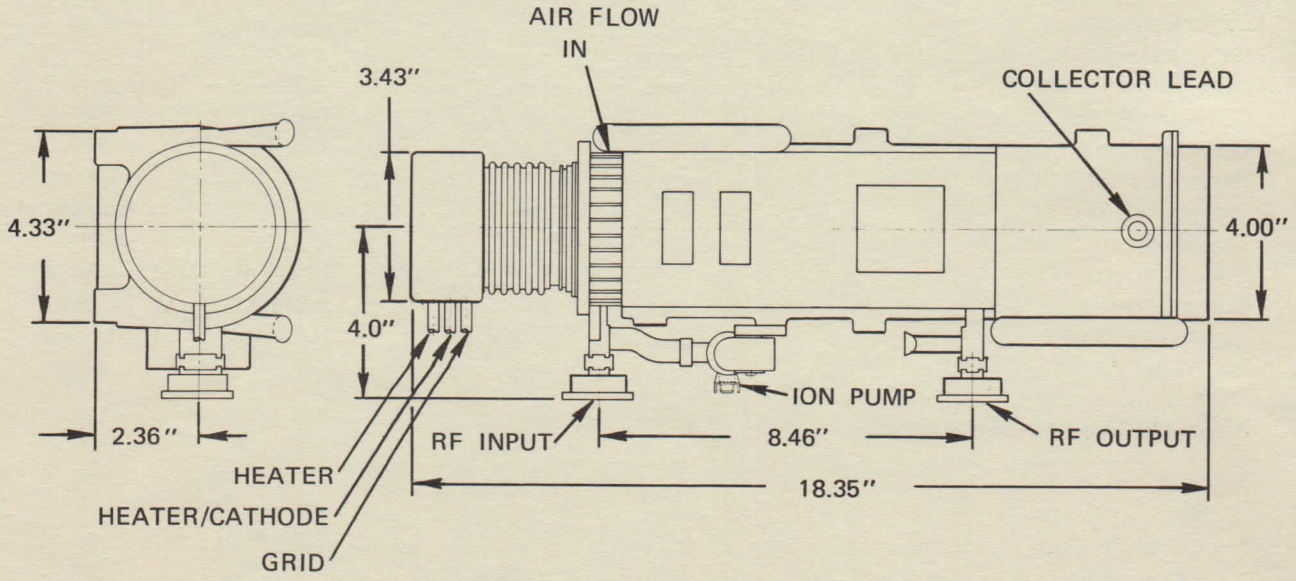

HUGHES HUGHES AIRCRAFT COMPANY **ELECTRON DYNAMICS DIVISION** 3100 West Lomita Boulevard, Torrance, California 90509, Tel (213) 534-2121

PRINTED IN U.S.A. 11-73

HUGHES

ELECTRON DYNAMICS DIVISION

312H

1kW 2-4 GHz PULSE TWT

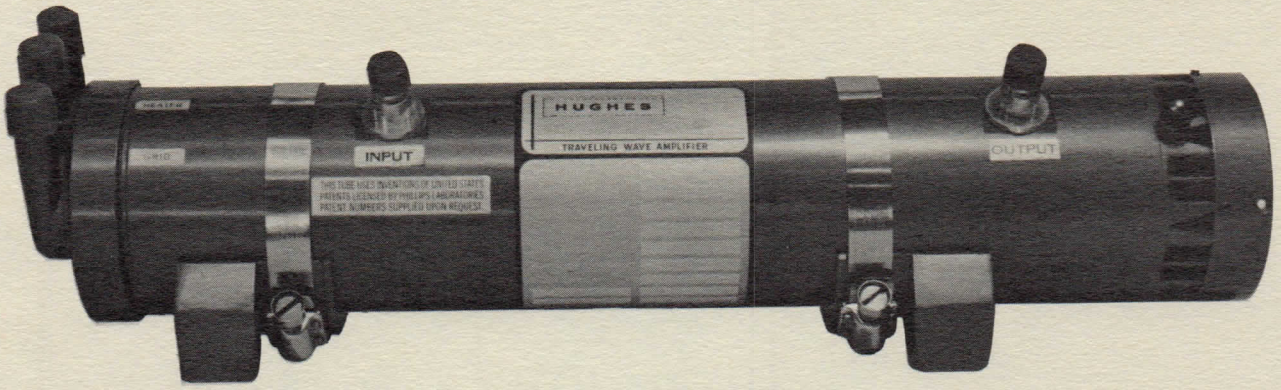

DESCRIPTION

The 312H is a broadband, grid controlled traveling-wave tube. This PPM tube has a peak power output greater than one kilowatt over a full octave bandwidth. Its sealed package makes the tube especially suited for applications meeting MIL-T-5422, Class I.

SPECIFICATIONS

NOTE: All voltages with respect to cathode.

Frequency Band	2-4 GHz
Power Output	1 kW
Duty	.005
Gain, Sat.	30 dB
Gain, SSG	36 dB
Beam Voltage	7.1 kV
Beam Current	1.2 A
Grid Drive	260 V
Grid Bias	–90 V
Grid Current	0.18 A
Heater Voltage	6.3 V
Heater Current	2.2 A
Weight	12 lbs.
Length	16 in.
Cooling	12 cfm air
RF Connectors	TNC
Environment	MIL-T-5422 Cl I

312H

1kW 2-4 GHz PULSE TWT

HUGHES

ELECTRON DYNAMICS DIVISION

PERFORMANCE CURVE

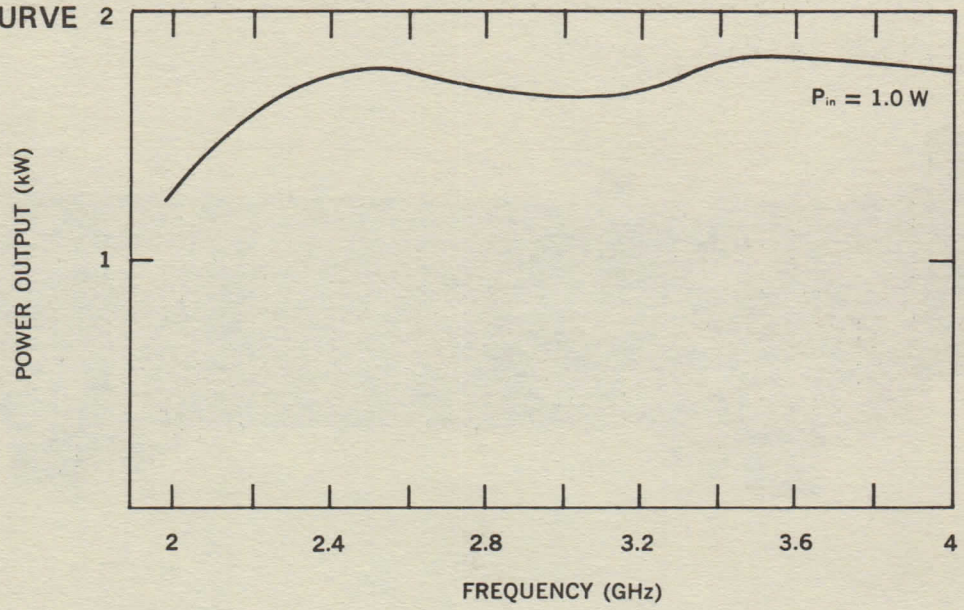

OUTLINE AND MOUNTING DRAWING

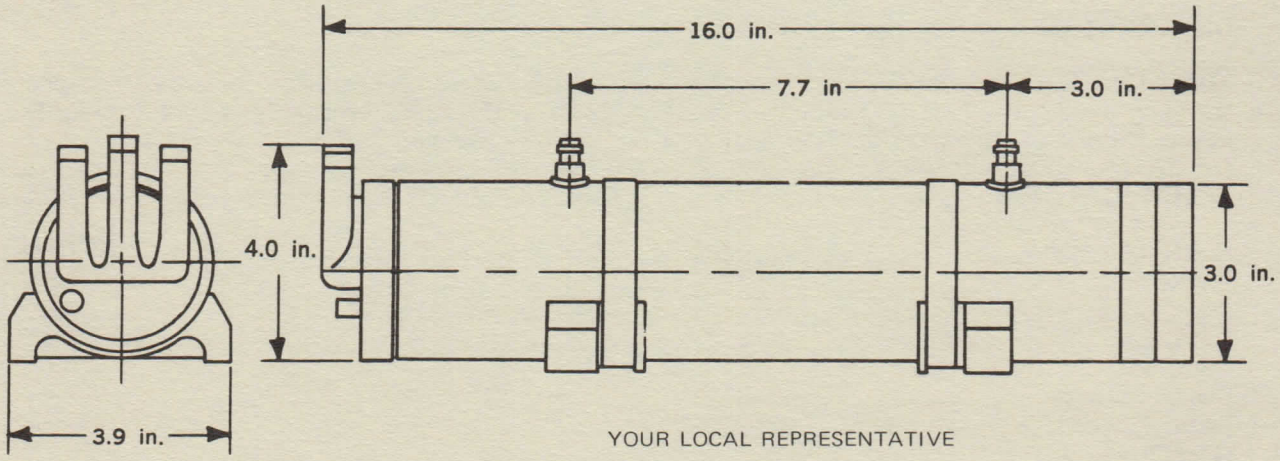

YOUR LOCAL REPRESENTATIVE

HUGHES
HUGHES AIRCRAFT COMPANY

ELECTRON DYNAMICS DIVISION / 3100 W. LOMITA BLVD. TORRANCE, CALIFORNIA 90509

Printed in U.S.A.–5-71

HUGHES

HUGHES AIRCRAFT COMPANY

ELECTRON DYNAMICS DIVISION

340H

1 kW 2-4 GHz pulsed TWT

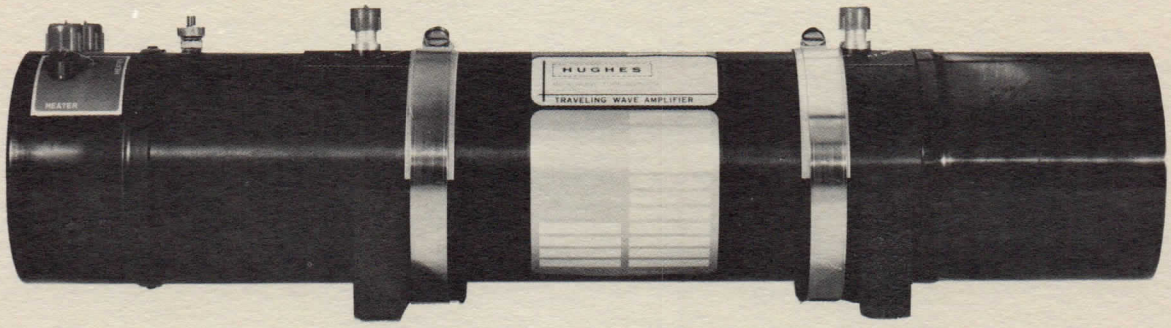

DESCRIPTION

The Hughes Model 340H is a full-octave bandwidth traveling-wave tube. With peak power output greater than one kilowatt, this 0.01 duty, high gain tube in its sealed, periodic-permanent-magnet structure is especially suited for systems meeting MIL-E-5400 Class I environment.

SPECIFICATIONS*

Frequency Band	2–4 GHz
Power Output	1 kW
Duty	0.01
Gain (saturation)	32 dB
Gain (small signal)	38 dB
Beam Voltage	7.1 V
Beam Current	1.2 A
Heater Voltage	6.3 V
Heater Current	2.8 A
Weight	15 pounds
Length	17.4 inches
Cooling	50 cfm air
RF Connectors	coax-TNC
Environments	MIL-E-5400 Class I

*All voltages with respect to cathode.

340H

1 kW 2-4 GHz pulsed TWT

HUGHES

HUGHES AIRCRAFT COMPANY

ELECTRON DYNAMICS DIVISION

PERFORMANCE CURVE

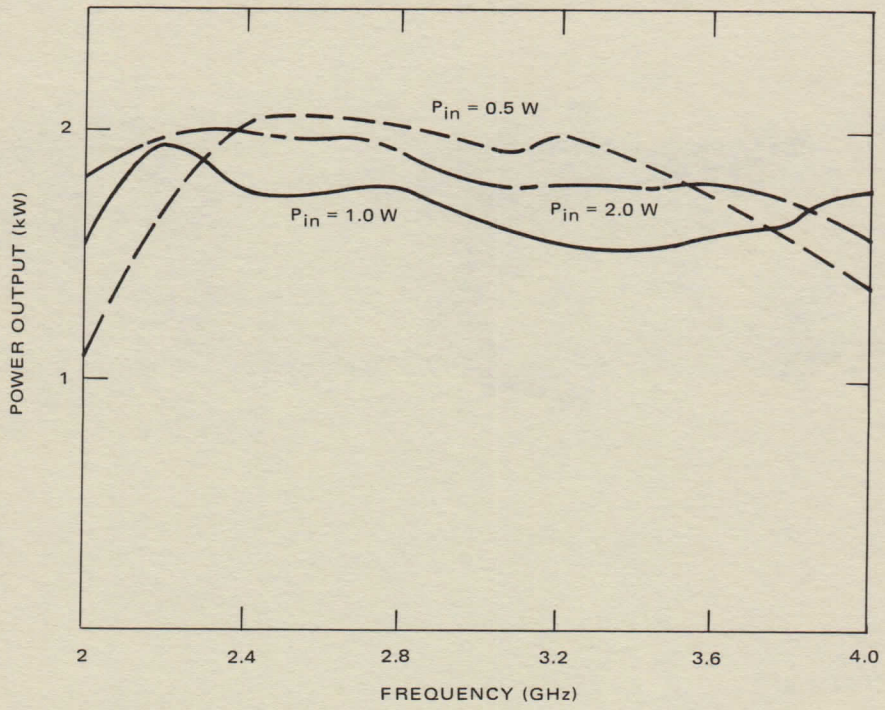

OUTLINE AND MOUNTING DRAWING

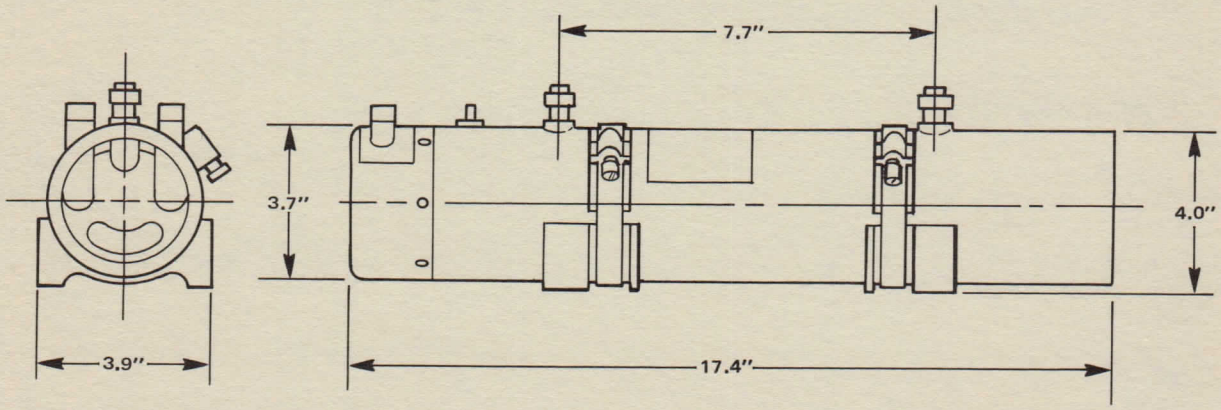

Specifications subject to change without notice.

YOUR LOCAL REPRESENTATIVE

HUGHES
HUGHES AIRCRAFT COMPANY

ELECTRON DYNAMICS DIVISION / 3100 W. LOMITA BLVD. TORRANCE, CA. 90509/TEL (213) 534-2121

Printed in U.S.A.–3-73

HUGHES

ELECTRON DYNAMICS DIVISION

414H

12W 1.5-2.3 GHz CW TWT

DESCRIPTION

The 414H is a space qualified traveling-wave tube which operates from 1.5 GHz to 2.3 GHz with an output power of 12 watts or greater. Current application is in the ATS-E Satellite.

SPECIFICATIONS

Frequency	1.5 - 2.3 GHz
Power Output	12 W
Duty	CW
Gain (Saturation)	30 dB
Efficiency	28%
Beam Voltage	1170 V
Beam Current	50 mA
Anode Voltage	100 V dc
Anode Current	0.3 mA
Collector Voltage	500 V
Heater Voltage	5.2 V
Heater Current	0.287 mA
Noise Figure	30 dB Maximum
Construction	Metal Ceramic
Cooling	Conduction
Focusing	PPM
Weight	22 Ounces
Length	11.5 Inches
Connectors	OSM Female
Expected Life	>50,000 Hours

NOTE: All voltages with respect to ground

414H

12W 1.5-2.3 GHz CW TWT

HUGHES

ELECTRON DYNAMICS DIVISION

PERFORMANCE CURVE

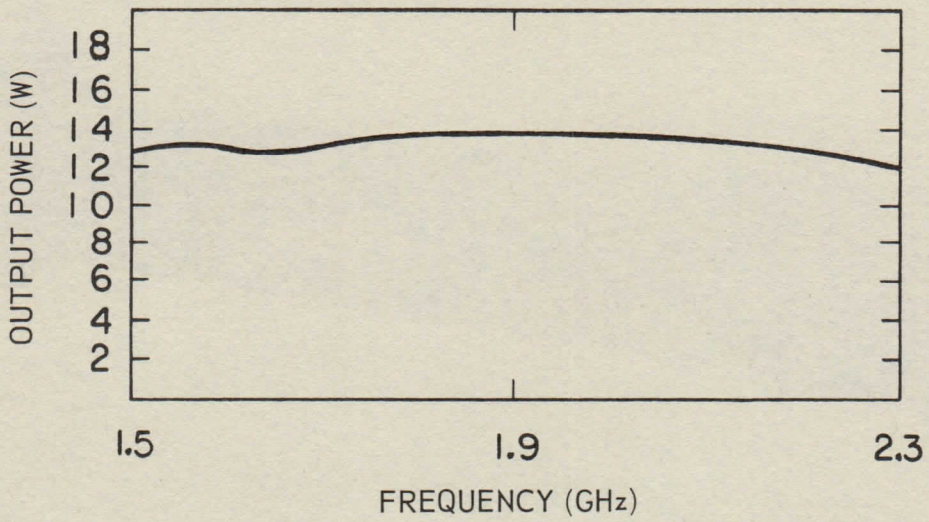

OUTLINE AND MOUNTING DRAWING

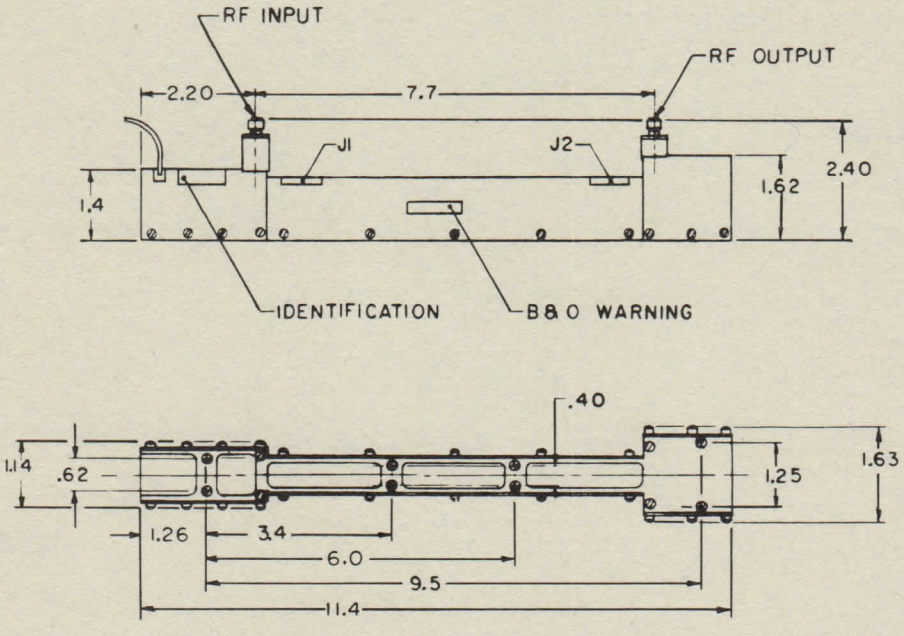

YOUR LOCAL REPRESENTATIVE

HUGHES
HUGHES AIRCRAFT COMPANY

ELECTRON DYNAMICS DIVISION / 3100 W. LOMITA BLVD. TORRANCE, CA. 90509 / TEL (213) 534-2121

Printed in U.S.A.—11—71

HUGHES

HUGHES AIRCRAFT COMPANY

ELECTRON DYNAMICS DIVISION

551H

Environmentalized 1 kW S-band CW TWT

DESCRIPTION

The Hughes Model 551H is a 1.0 kW CW octave bandwidth traveling-wave tube. The solenoid for focusing the beam is within the 3 inch diameter of the package. This results in a small, lightweight package with low pressure drop for the liquid cooling. The tube is designed for MIL-E-5400 Class II environment.

SPECIFICATIONS*

Frequency	2.0 to 4.0 GHz
Power Output (minimum)	1 kW
Power Output Mid-band (nominal)	2 kW
Duty Cycle	CW
Saturated Gain	30 dB
Filament Voltage (nominal)	12.8 V
Filament Current (nominal)	3.0 A
Cathode Voltage (nominal)	8.0 kV
Cathode Current (nominal)	1.5 A
Solenoid Voltage (nominal)	30 V
Solenoid Current (nominal)	23 A
Weight	22 pounds (9.98 kg)
Length	20 inches (50.80 cm)
Diameter	3 inches (7.62 cm)
Cooling	Coolanol 35 or equivalent (10 psi at 3 GPM room ambient)
Environment	MIL-E-5400, Class II

*All specifications are subject to change without prior notice.

551H

Environmentalized 1 kW S-band CW TWT

HUGHES

HUGHES AIRCRAFT COMPANY

ELECTRON DYNAMICS DIVISION

TYPICAL PERFORMANCE CURVE

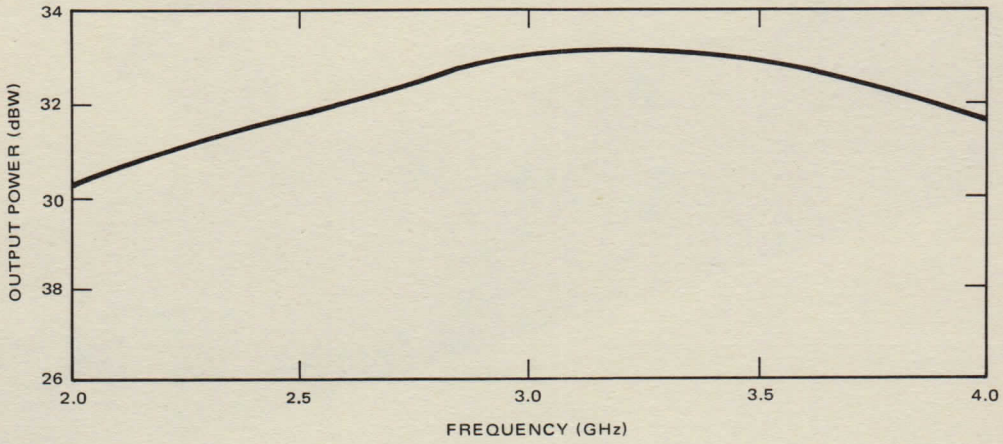

OUTLINE DRAWING

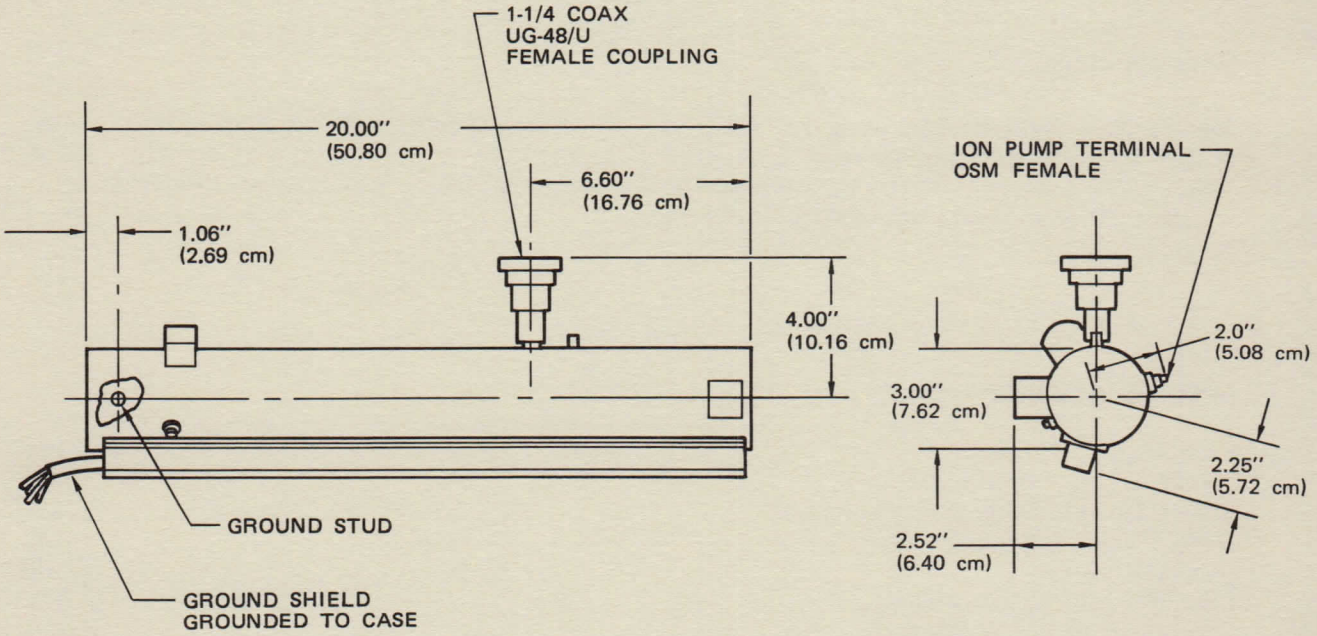

Printed in U.S.A. 7-75

HUGHES

ELECTRON DYNAMICS DIVISION

554H

Environmentalized 2kW S-Band Pulsed TWT

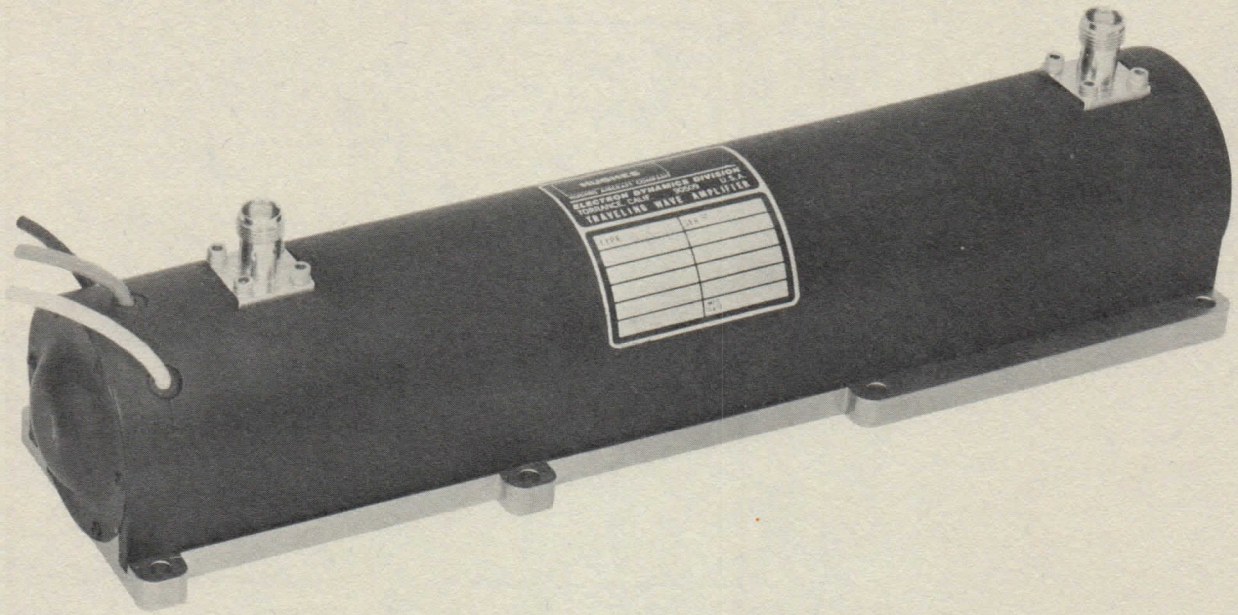

DESCRIPTION

The Hughes Model 554H is a rugged, light weight, high power traveling-wave tube designed primarily for airborne applications. The tube features highly reliable all metal ceramic construction, periodic permanent magnet focusing and conduction cooling. A minimum output power of one kilowatt and small-signal gain exceeding 35 dB are provided over an octave bandwidth. Output power of 2 kW and small-signal gain of 40 dB are obtainable at mid-band frequency. Package designs to special customer requirements are also available.

SPECIFICATIONS

Frequency Band	2.0 – 4.0 GHz
Minimum Power Output	1.0 kW
Duty	Over 2%
Saturated Gain	30 dB
Minimum SS Gain	35 dB
Cathode Voltage	9,000 V
Cathode Current	2.0 A
Grid Drive	200 V
Grid Cutoff	–150 V
Grid Current	0.4 A
Heater Voltage	6.3 V
Heater Current	3.8 A
Weight	8 pounds
Length	12 inches
Cooling	conduction
RF Connectors	coax TNC type

554H

Environmentalized 2kW S-Band Pulsed TWT

HUGHES

ELECTRON DYNAMICS DIVISION

PERFORMANCE CURVE

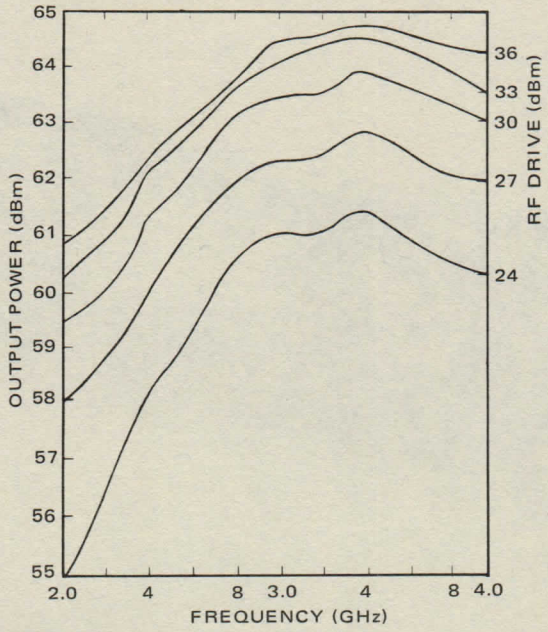

OUTLINE AND MOUNTING DRAWING

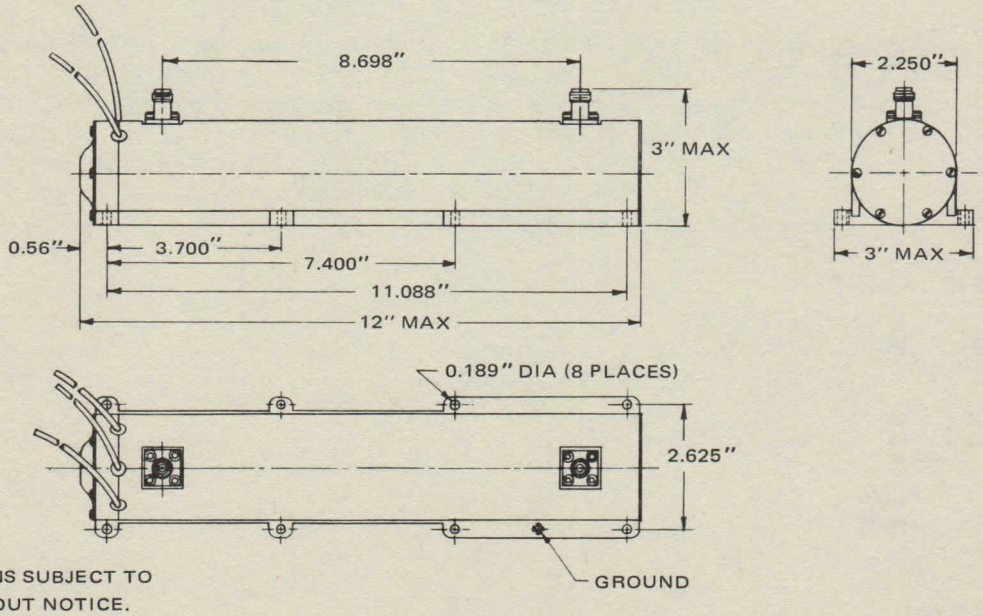

SPECIFICATIONS SUBJECT TO CHANGE WITHOUT NOTICE.

YOUR LOCAL REPRESENTATIVE

HUGHES
HUGHES AIRCRAFT COMPANY

ELECTRON DYNAMICS DIVISION / 3100 W. LOMITA BLVD. TORRANCE, CA. 90509/TEL (213) 534-2121

LITHO IN U.S.A. — 12-72

HUGHES

HUGHES AIRCRAFT COMPANY

ELECTRON DYNAMICS DIVISION

555H

1 kW S-BAND PULSED TWT

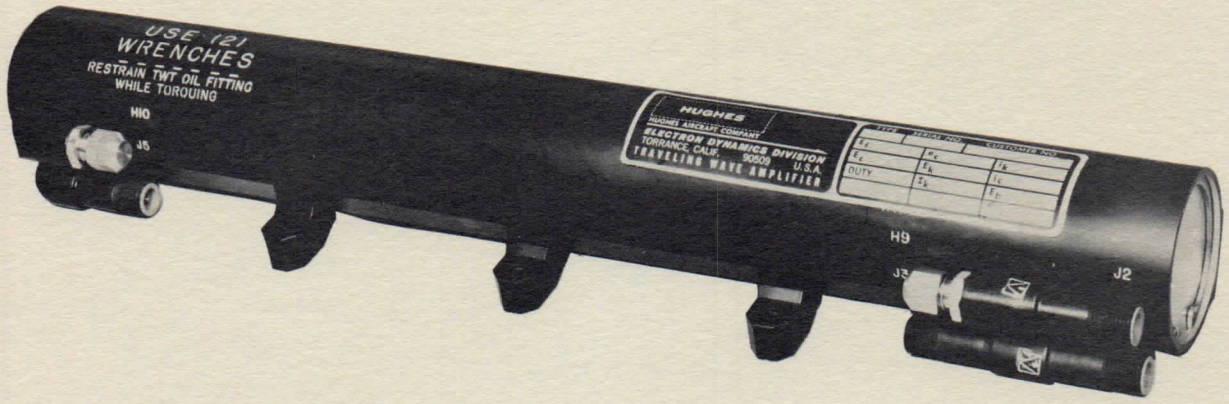

DESCRIPTION

The Hughes Model 555H is a rugged, lightweight, high power traveling-wave tube designed for MIL-E-5400 Class II environmental applications. The tube is of reliable all metal-ceramic construction, periodic permanent magnet focusing, grid controlled, and is oil cooled. Output power levels in excess of one kilowatt at up to 6% duty cycle may be achieved with this device.

SPECIFICATIONS

Frequency Band	2.0 – 4.0 GHz
Power Output	1.25 kW minimum
Duty Cycle	up to 6%
Large Signal Gain	30 dB
Cathode Voltage	7.8 kV
Cathode Current	1.8 A
Grid Drive Voltage	200 V
Grid Current	400 mA
Grid Bias	−150 V
Heater Voltage	6.3 V
Heater Current	3.0 A
Weight	10.0 pounds (4.55 kg)
Length	17.5 inches (44.45 cm)
Cooling	oil (Coolanol 35 or equivalent)
RF Input Connector	TNC
RF Output Connector	TNC

NOTE: All voltages with respect to cathode

555H

1 kW S-BAND PULSED TWT

HUGHES

HUGHES AIRCRAFT COMPANY

ELECTRON DYNAMICS DIVISION

PERFORMANCE CURVE

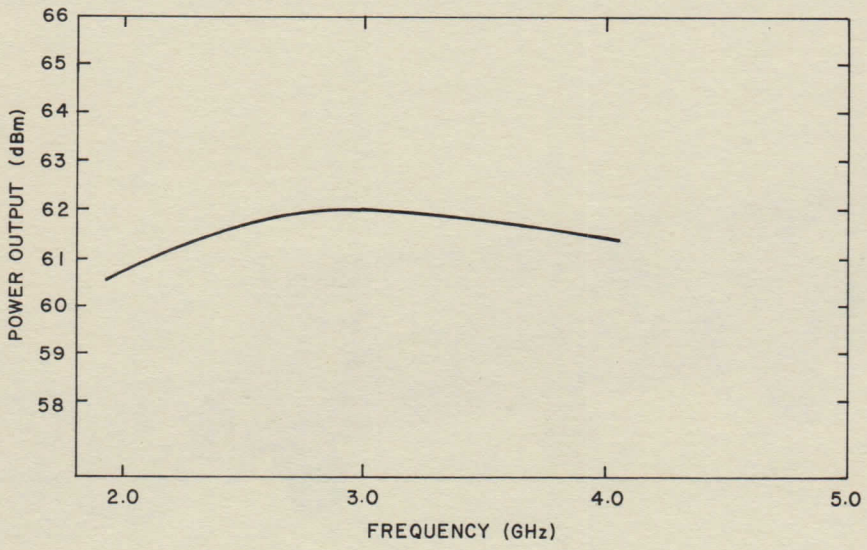

OUTLINE AND MOUNTING DRAWING

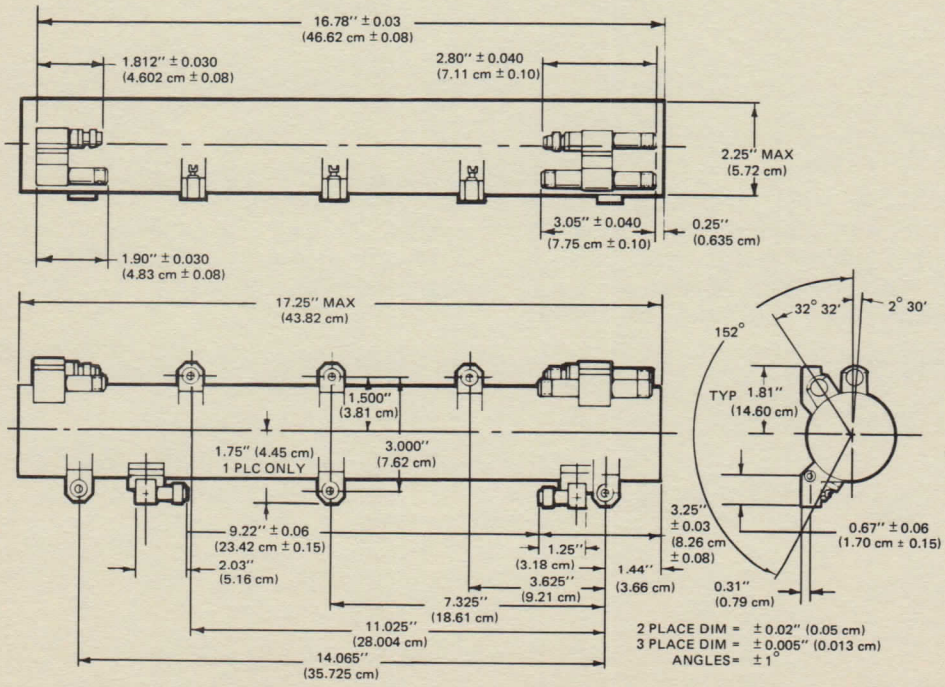

Specifications subject to change without notice

YOUR LOCAL REPRESENTATIVE

HUGHES ELECTRON DYNAMICS DIVISION 3100 W. LOMITA BOULEVARD, P.O. BOX 2999, TORRANCE, CA. 90509 TEL (213) 517-6000

Printed in U.S.A. 2/82 AL

HUGHES

HUGHES AIRCRAFT COMPANY

ELECTRON DYNAMICS DIVISION

559H

S-band Pulsed TWT

FEATURES

- 125 kW Peak Power
- Broadband
- Shadow Grid Modulation
- High Gain
- High Duty
- Depressed Collector
- PPM Focusing
- Liquid Cooling
- Environmentalized

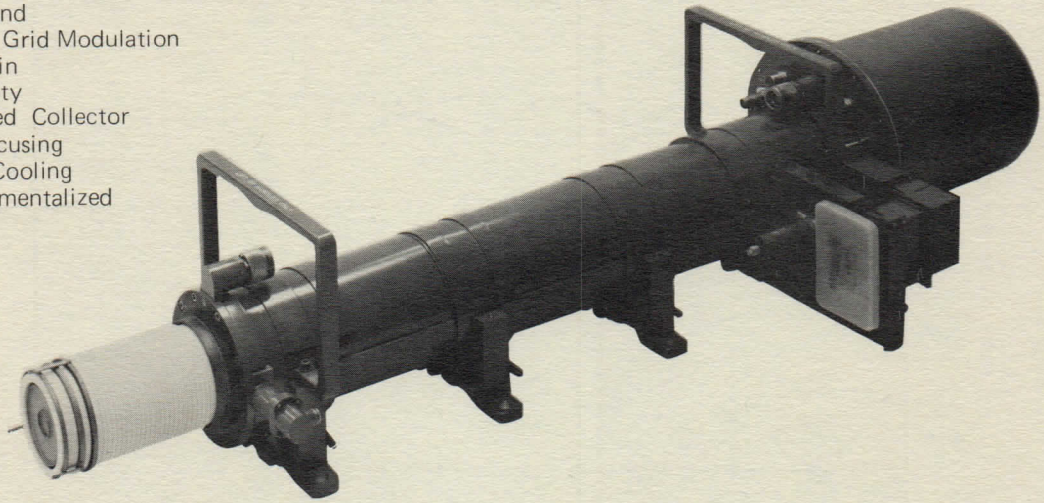

PERFORMANCE SPECIFICATIONS*	MINIMUM	TYPICAL	MAXIMUM
Frequency	3.1 GHz	–	3.5 GHz
Output Power	–	125 kW	–
Saturated Gain	50 dB	53 dB	56 dB
Duty	–	6%	8%
ELECTRICAL PARAMETERS			
Cathode Voltage	42 kV	44.5 kV	45.5 kV
Cathode Current	15 A	17 A	18 A
Body Voltage	–	ground	–
Body Current (with RF)	1.0 A	2.5 A	4 A
Collector Voltage	0	–17 kV	–18 kV
Collector Current (with RF)	11 A	14 A	18 A
Heater Voltage (dc or ac)	6 V	8 V	11 V
Heater Current	8 A	9.5 A	11 A
Grid Drive	600 V	1000 V	1100 V
Grid Bias	–700 V	–800 V	–850 V
Grid Current	–	15 mA	75 mA
Ion Pump Voltage	3.0 kV	3.3 kV	3.6 kV
Ion Pump Current	–	<5 μA	1 mA
MECHANICAL SPECIFICATIONS			
Weight	–	175 lbs. (79.38 kg)	185 lbs. (83.92 kg)
Cooling:			
Coolant Type	–	*Deionized H_2O	–
Collector Flow Rate	8 gal/min	–	–
Collector Pressure Drop	–	–	40 psi
Body Flow Rate	4 gal/min	–	–
Body Pressure Drop	–	–	50 psi

*(Can be cooled with Ethylene Glycol and H_2O)

All specifications are subject to change without prior notice.

559H

S-band Pulsed TWT

HUGHES

HUGHES AIRCRAFT COMPANY

ELECTRON DYNAMICS DIVISION

TYPICAL PERFORMANCE CURVE

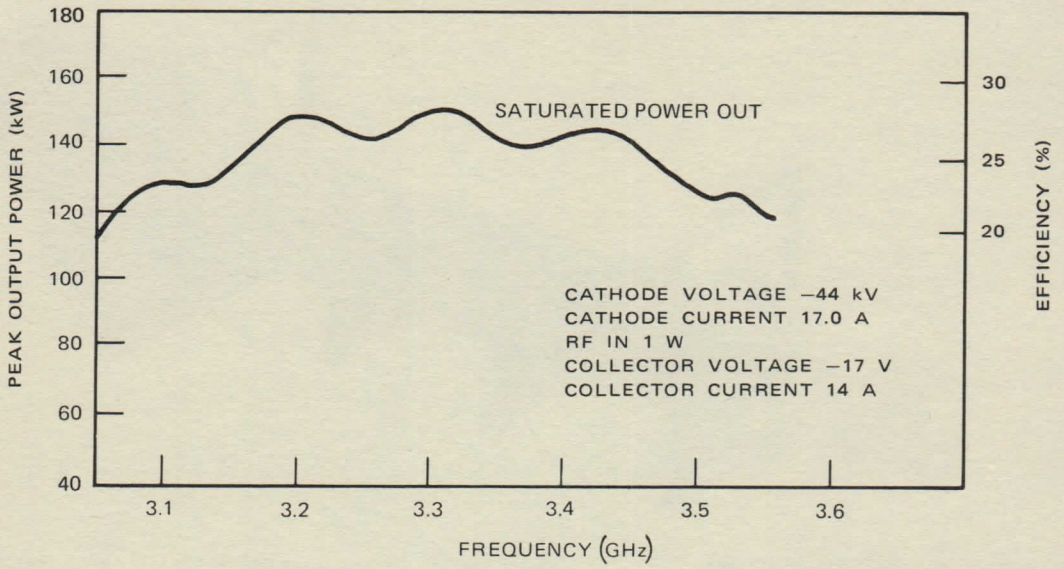

OUTLINE DRAWING

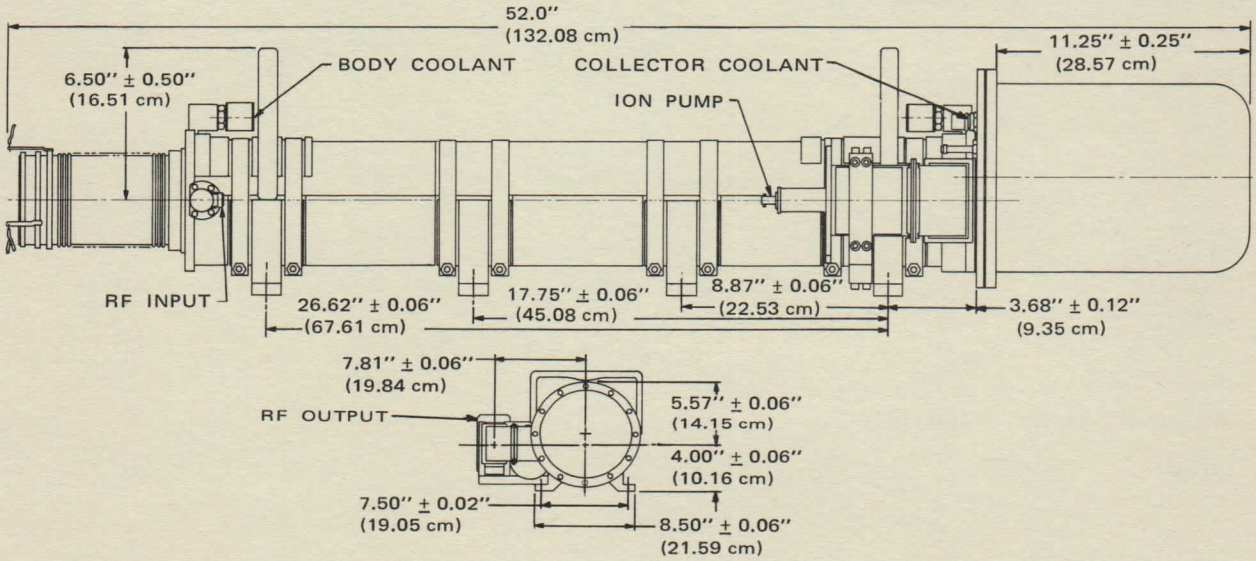

HUGHES ELECTRON DYNAMICS DIVISION MICROWAVE TRAVELING-WAVE TUBE PRODUCTS 3100 West Lomita Boulevard, Torrance, California 90509, Tel (213) 534-2121

HUGHES AIRCRAFT COMPANY

PRINTED IN U.S.A.10–75

HUGHES

HUGHES AIRCRAFT COMPANY

ELECTRON DYNAMICS DIVISION

614H

10 kW CW C-Band TWT

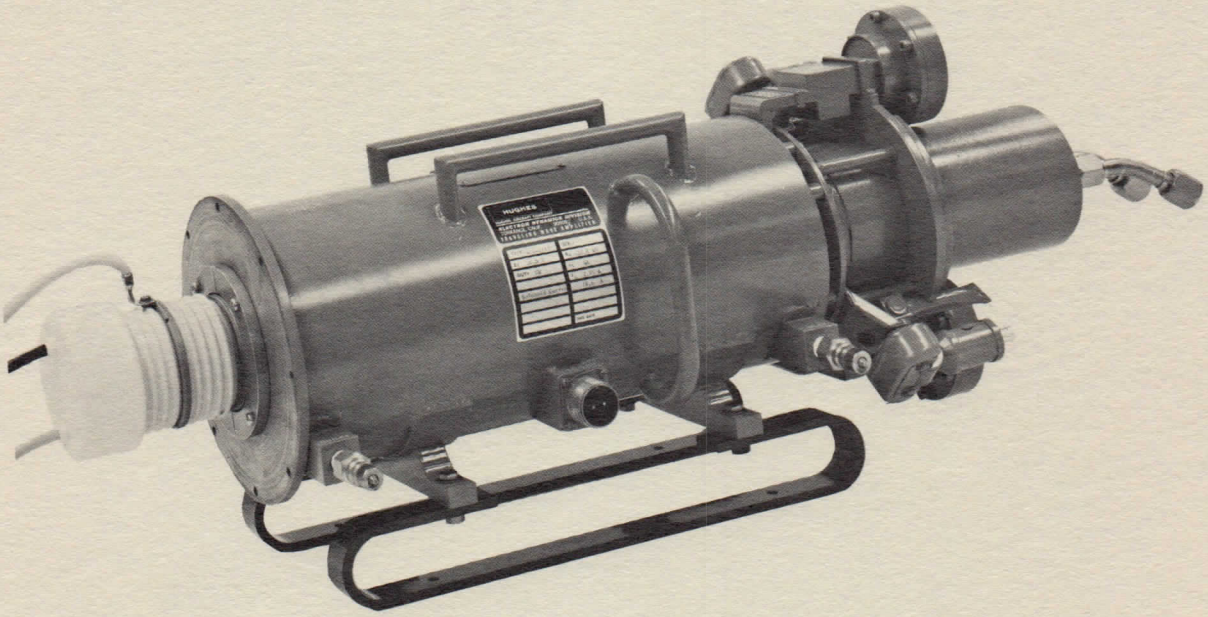

DESCRIPTION

The Hughes Model 614H traveling-wave tube is a solenoid focused device capable of providing 10 kW of continuous RF power over the frequency range of 5.925 to 6.425 GHz. An efficiency of over 20% is achieved by depressed collector operation. This tube has been specifically designed to achieve optimum performance for communications ground terminal transmitter applications.

*U.S. Patent Number 3,181,023

The 614H has the option of modulating with an anode which allows the tube to be turned on with a low power source. This turn-on technique minimizes tube and power supply transients, providing increased tube and system life and reliability.

Minimum gain variations and improved phase linearity characteristics have been achieved by the use of special patented internal terminations*.

SPECIFICATIONS

ELECTRICAL PARAMETERS	MINIMUM	TYPICAL	MAXIMUM
Cathode Voltage	−16.5 kV	−18.5 kV	−20.0 kV
Cathode Current	2.70 A	3.00 A	3.25 A
Body Current (RF)	—	200 mA	300 mA
Collector Voltage	−500 V	−4.0 kV	−6.0 kV
Collector Current (RF)	2.40 A	2.80 A	3.25 A
Anode Voltage (beam on)*	0	0	+500 V
Anode Current	0	3 mA	10 mA
Heater Voltage	9.0 V	10.0 V	12.0 V
Heater Current	3.0 A	3.5 A	4.0 A
Solenoid Voltage	60 V	120 V	130 V
Solenoid Current	15 A	20 A	22 A
Ion Pump Voltage	3.0 kV	3.3 kV	3.6 kV
Ion Pump Current	—	less than 5 μA	1 mA
RF PARAMETERS			
Output Power	8.0 kW	9.0 kW	12.0 kW
Input Power	—	0.6 W	0.8 W
Saturated Gain	40 dB	41 dB	45 dB
Duty	—	CW	—
Frequency	5.925	—	6.425
Phase Sensitivity (Cathode Voltage)	—	0.14°/V	0.18°/V
Phase Sensitivity (Solenoid Current)	—	8°/V	15°/V
Amplitude Sensitivity (Cathode Voltage)	—	0.008 dB/V	0.010 dB/V
Efficiency (Depressed Collector)	16%	20%	24%
MECHANICAL			
Weight	—	95 pounds	—
Collector Flow Rates (Deionized Water)	10 gal/min	10 gal/min	—
Collector Pressure Drops (Deionized Water)	—	42 psi	50 psi
Solenoid Flow Rates (Deionized Water)	2 gal/min	2 gal/min	—
Solenoid Pressure Drops (Deionized Water)	—	19 psi	30 psi
Body Flow Rates	1 gal/min	1 gal/min	—
Body Pressure Drops	—	12 psi	30 psi
WAVEGUIDE CONNECTIONS			
Input	—	UG-344U	—
Output	—	UG-344U	—

*Application of negative anode voltage equal to or greater than the cathode voltage will turn the beam current off.

PERFORMANCE CURVES

NOTE: The following curves illustrate typical performance but should not be used for design limits without contacting Hughes Electron Dynamics Division. The following operating parameters were used in the measurements: E_k = −18.9 kV; I_k = 3.17A; E_b = −4.0 kV; and I_{sol} = 20.5 A.

SATURATED OUTPUT POWER

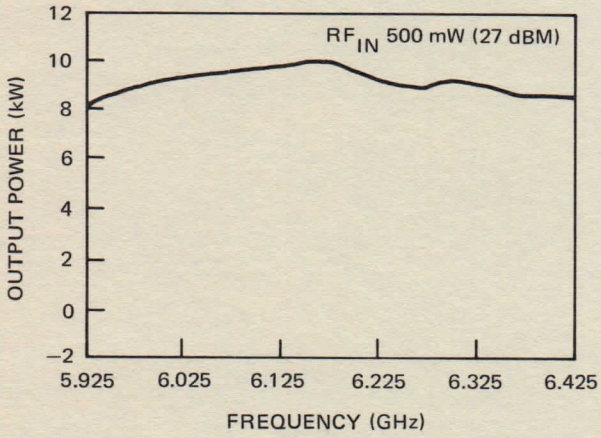

SMALL SIGNAL GAIN

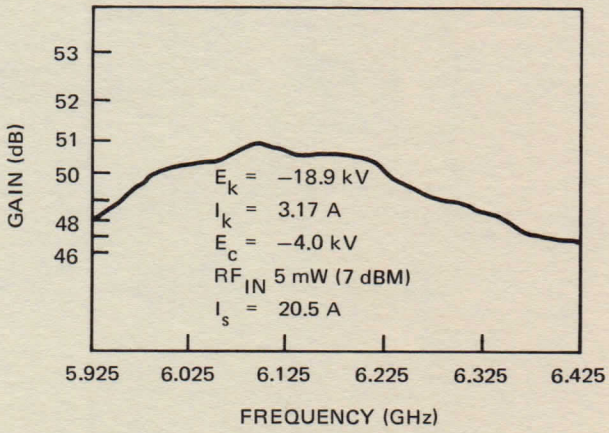

POWER OUT VERSUS POWER IN AT 6.225 GHz

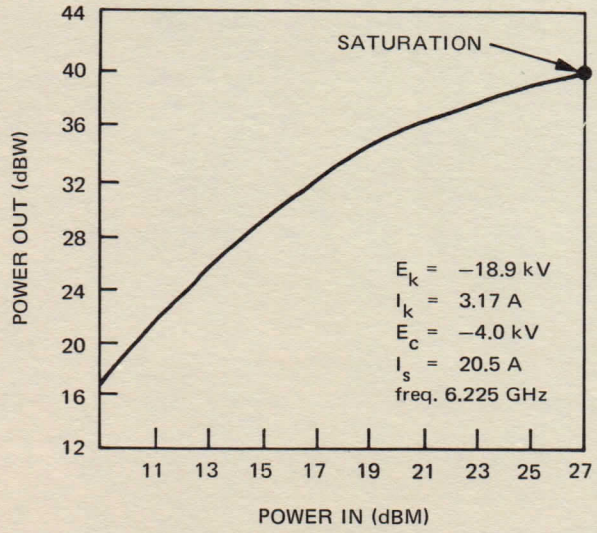

THIRD ORDER INTERMODULATION PRODUCTS VERSUS OUTPUT POWER

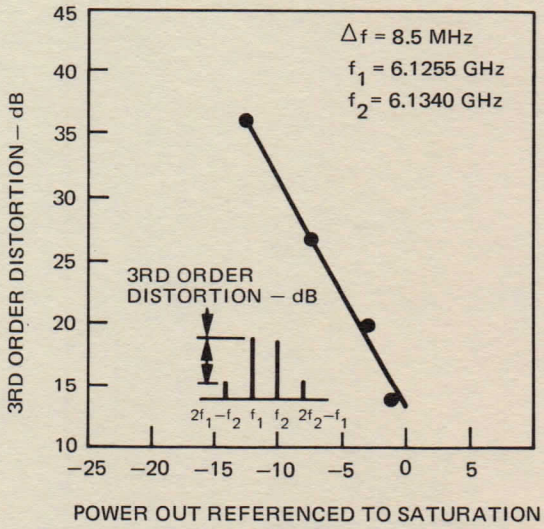

614H

10 kW CW C-Band TWT

HUGHES

HUGHES AIRCRAFT COMPANY

ELECTRON DYNAMICS DIVISION

OUTLINE AND MOUNTING DRAWING

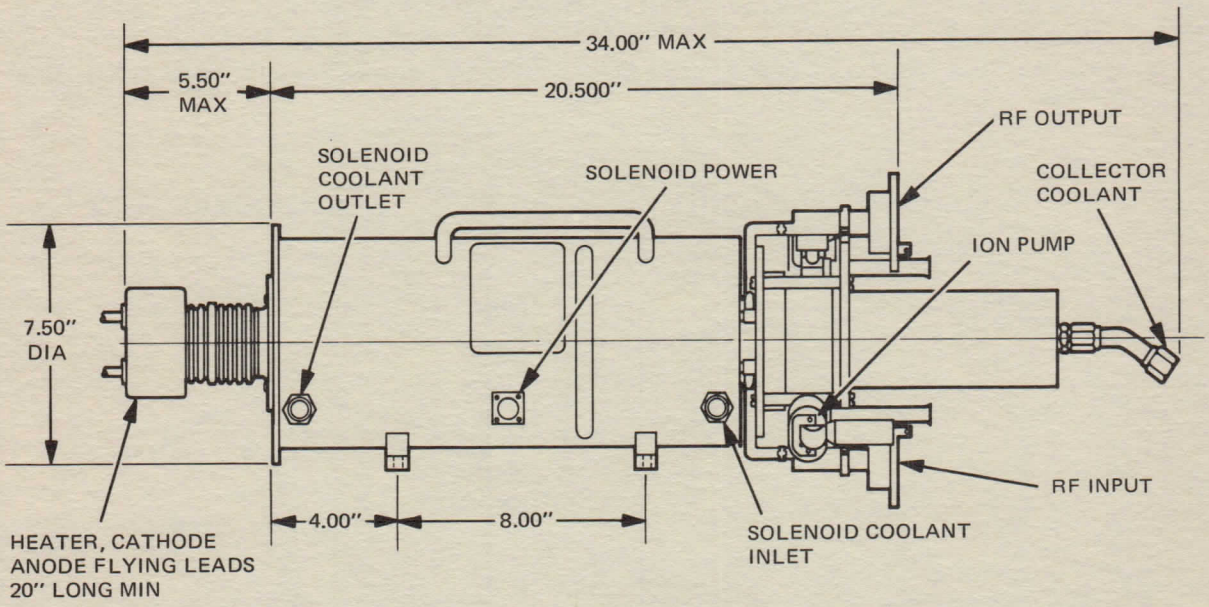

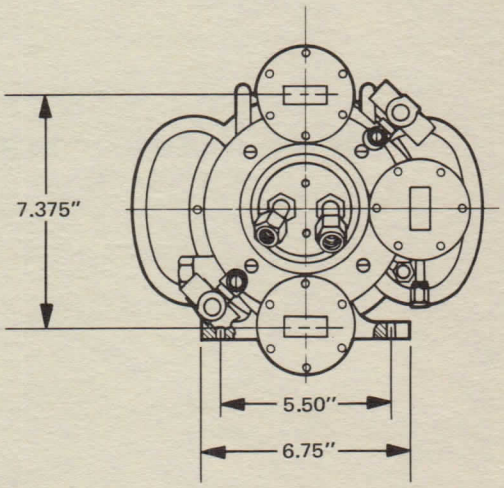

YOUR LOCAL REPRESENTATIVE

HUGHES
HUGHES AIRCRAFT COMPANY
ELECTRON DYNAMICS DIVISION / 3100 W. LOMITA BLVD. TORRANCE, CA. 90509 / TEL (213) 534-2121

Printed in U.S.A. – 7-73

HUGHES

HUGHES AIRCRAFT COMPANY

ELECTRON DYNAMICS DIVISION

621H

C-Band Pulsed TWT

FEATURES

- 50 kW Peak Power
- Broadband
- Shadow Grid Modulation
- High Gain
- PPM Focusing
- Liquid Cooling
- Environmentalized*

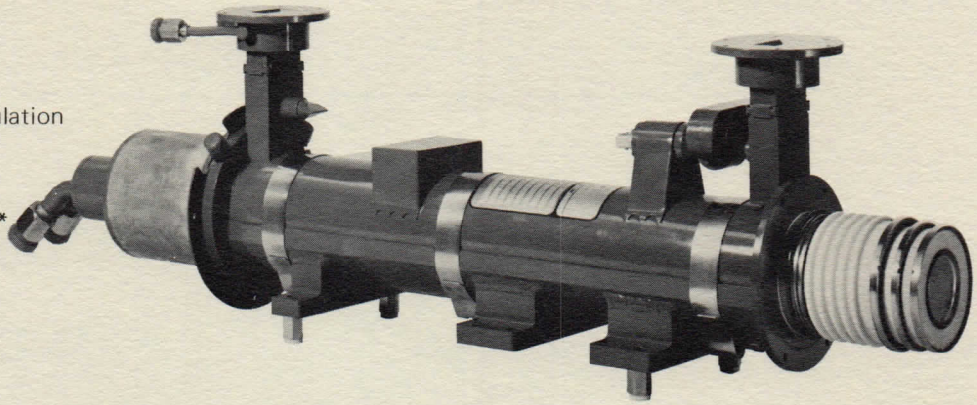

PERFORMANCE SPECIFICATIONS	MINIMUM	TYPICAL	MAXIMUM
Frequency	5.4 GHz	–	5.9 GHz
Output Power	50 kW	75 kW	90 kW
Saturated Gain	50 dB	53 dB	55 dB
Duty	–	2%	2.5%
ELECTRICAL PARAMETERS			
Cathode Voltage	–35 kV	–36 kV	–38 kV
Cathode Current	8 A	9 A	10.5 A
Body Voltage	–	Ground	–
Body Current (with RF)	1 A	2 A	3.5 A
Collector Voltage	–	0	–15 kV**
Collector Current (with RF)	5.5 A	7 A	10.5 A
Heater Voltage (dc or ac)	8 V	9.5 V	10 V
Heater Current	5 A	5.5 A	8 A
Grid Drive	+390 V	+450 V	+630 V
Grid Bias	–750 V	–800 V	–900 V
Grid Current	–	10 mA	40 mA
Ion Pump Voltage	3.0 kV	3.3 kV	3.6 kV
Ion Pump Current	–	$<5\mu$A	1 mA
MECHANICAL SPECIFICATIONS			
Weight	–	40 pounds	43 pounds
Cooling			
Coolant Type	–	Deionized Water	–
Collector Flow Rate	3.5 gal/min	–	–
Collector Pressure Drop	–	–	20 psi
Body Flow Rate	1.5 gal/min	–	–
Body Pressure Drop	–	–	40 psi
Window Flow Rate	0.5 gal/min	–	–
Window Pressure Drop	–	–	15 psi

* Designed to meet MIL-E-5400 Class 2

** Model 621 H is capable of operating in depressed mode

621H

C-Band Pulsed TWT

HUGHES

HUGHES AIRCRAFT COMPANY

ELECTRON DYNAMICS DIVISION

TYPICAL PERFORMANCE CURVE

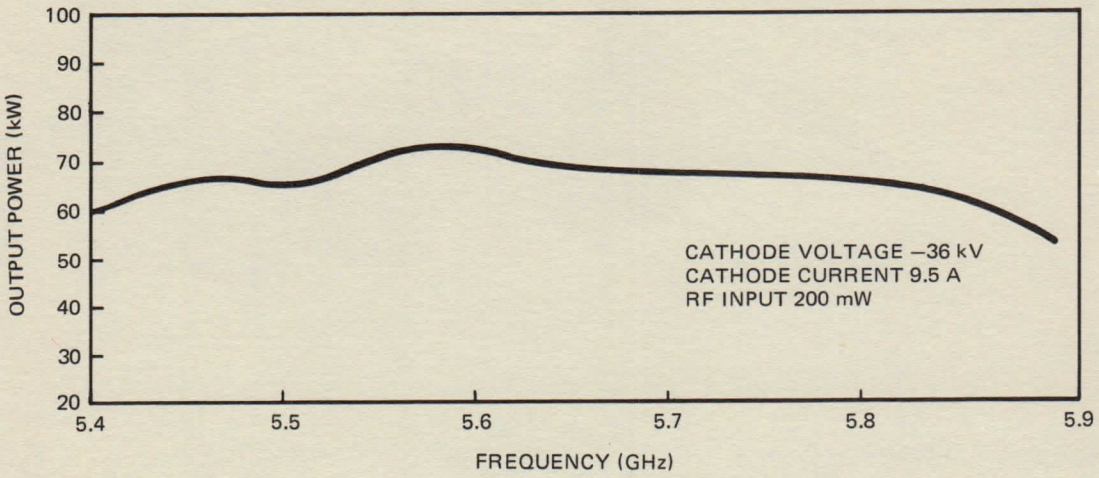

OUTLINE DRAWING

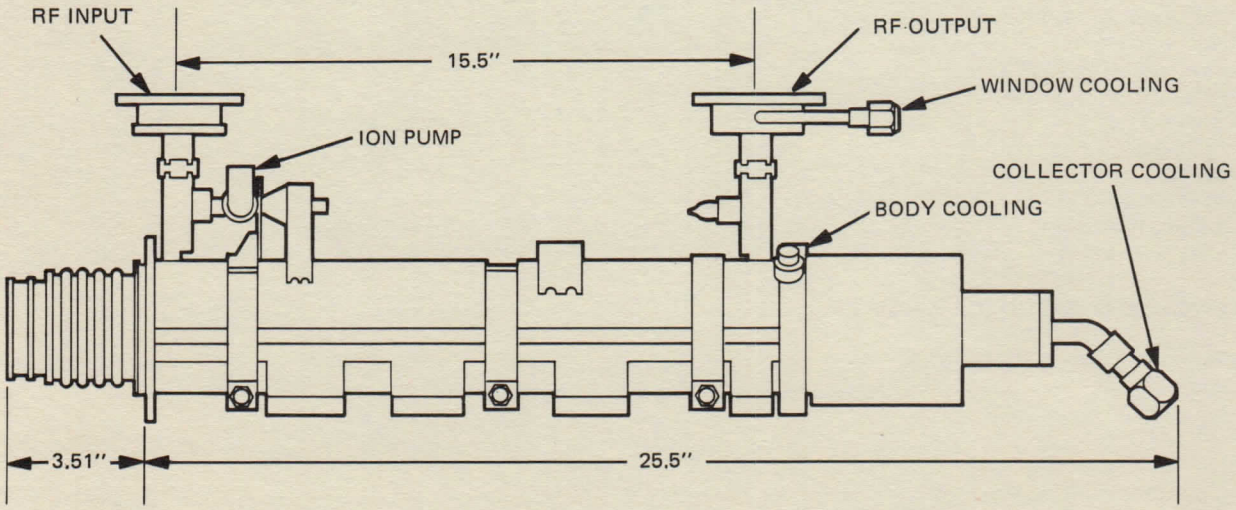

HUGHES
HUGHES AIRCRAFT COMPANY
ELECTRON DYNAMICS DIVISION / 3100 W. LOMITA BLVD. TORRANCE, CA. 90509 / TEL (213) 534-2121

Printed in U.S.A. –8-73

HUGHES

HUGHES AIRCRAFT COMPANY

ELECTRON DYNAMICS DIVISION

622H

C-Band Pulsed TWT

FEATURES

- 75 kW Peak Power
- Broadband
- Cathode Pulsed
- High Gain
- PPM Focusing
- Liquid Cooling
- Environmentalized*

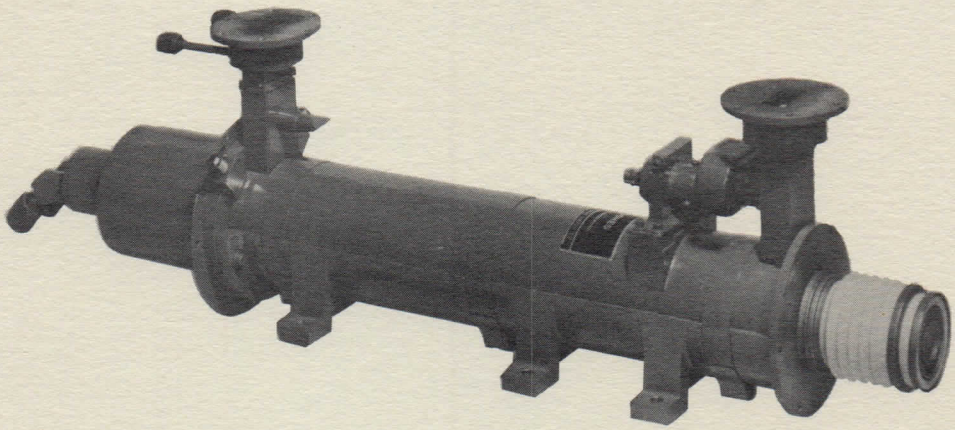

DESCRIPTION

The Hughes model 622H is a broadband, high power traveling-wave tube. This production type TWT has high efficiency with high gain per unit length. 75 kW of peak power is attained in this lightweight, periodic permanent magnet focused structure.

PERFORMANCE SPECIFICATIONS	MINIMUM	TYPICAL	MAXIMUM
Frequency	5.4 GHz	—	5.9 GHz
Output Power	75 kW	80 kW	100 kW
Saturated Gain	50 dB	53 dB	60 dB
Duty	—	2.5%	3.0%
ELECTRICAL PARAMETERS			
Cathode Voltage	−35 kV	−37 kV	−39 kV
Cathode Current	8 A	9 A	11.5 A
Body Voltage	—	ground	—
Collector Voltage (WRT body)	—	0	−14 kV**
Heater Voltage	—	9.5 V	11.5 V
Heater Current	—	5.5 A	8.0 A
Ion Pump Voltage	—	3.0 kV	3.5 kV
Ion Pump Current	—	—	2.0 mA
MECHANICAL SPECIFICATIONS			
Weight	—	40 pounds	43 pounds
Cooling			
Coolant Type	—	ethylene glycol/ water	—
Collector Flow Rate	3.0 gal/min (0.189 liters/sec)	—	—
Collector Pressure Drop	—	—	20 psi (1.4 kg/sq cm)
Body Flow Rate	2.0 gal/min (0.126 liters/sec)	—	—
Body Pressure Drop	—	—	50 psi (3.5 kg/sq cm)
Window Flow Rate	0.5 gal/min (0.032 liters/sec)	—	—
Window Pressure Drop	—	—	15 psi (1.05 kg/sq cm)

*Designed to meet MIL-E-5400 Class 2

**Model 622 H is capable of operating in depressed mode

622H

C-Band Pulsed TWT

HUGHES

HUGHES AIRCRAFT COMPANY

ELECTRON DYNAMICS DIVISION

PERFORMANCE CURVE

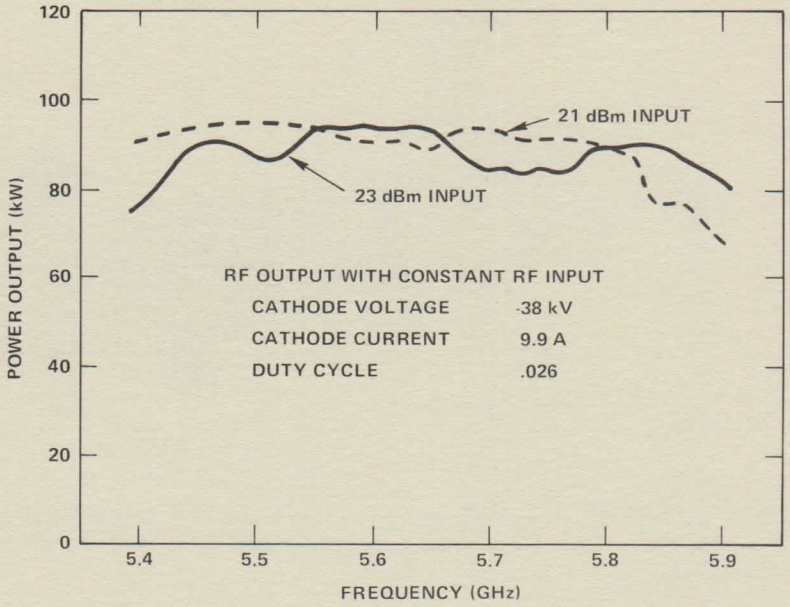

OUTLINE & MOUNTING DRAWING

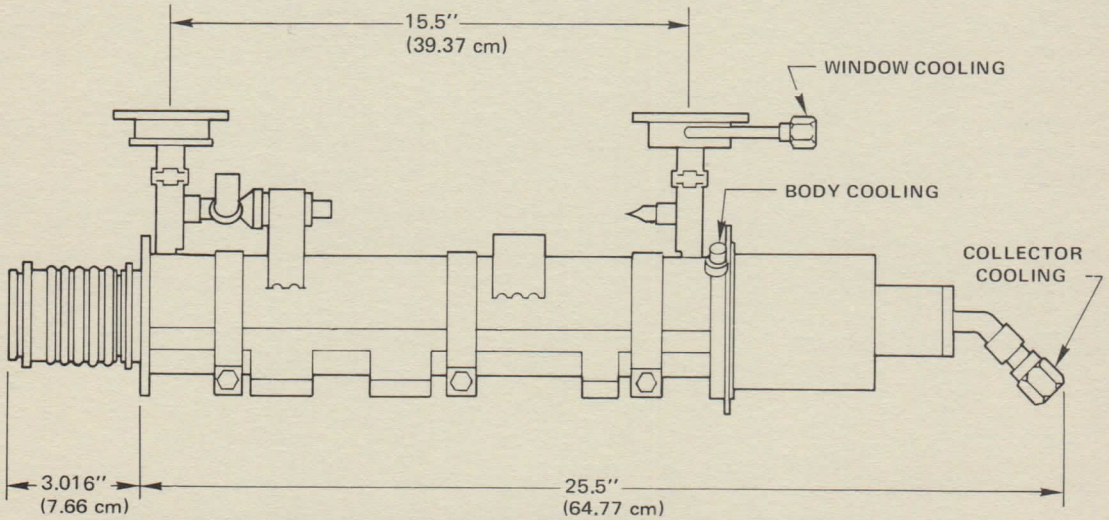

These data are typical values. Operating instructions and electrical characteristics are available upon request.

HUGHES
HUGHES AIRCRAFT COMPANY

MICROWAVE TRAVELING-WAVE TUBE PRODUCTS
ELECTRON DYNAMICS DIVISION 3100 West Lomita Boulevard, Torrance, California 90509, Tel (213) 534-2121

Printed in U.S.A. — 9/77

HUGHES

HUGHES AIRCRAFT COMPANY

ELECTRON DYNAMICS DIVISION

634H

C-Band Pulsed TWT

FEATURES

- 60 kW Peak Power
- Broadband
- Shadow Grid Modulation
- High Gain
- Solenoid Focusing
- Liquid Cooling
- Environmentalized*

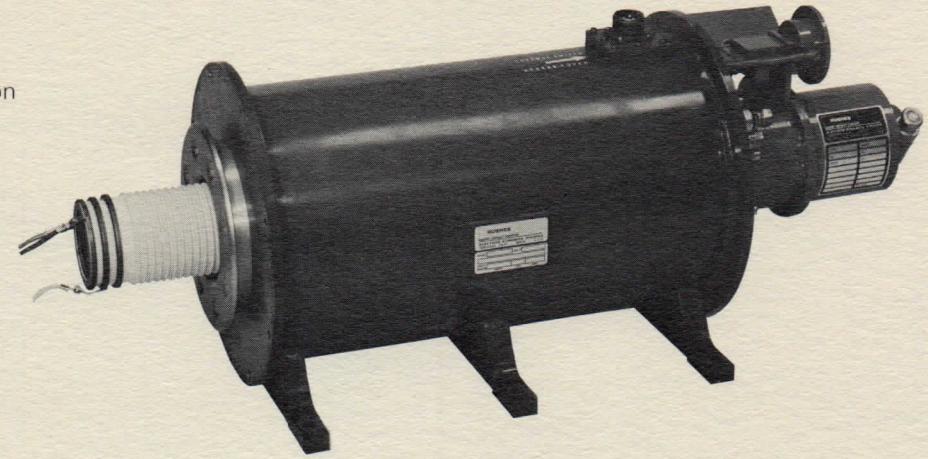

PERFORMANCE SPECIFICATIONS	MINIMUM	TYPICAL	MAXIMUM
Frequency	5.35 GHz	–	5.85 GHz
Output Power	60 kW	75 kW	–
Saturated Gain	43 dB	46 dB	53 dB
Duty	–	4%	–
ELECTRICAL PARAMETERS			
Cathode Voltage	–35 kV	–37 kV	–38 kV
Cathode Current	10 A	10.5 A	11.5 A
Body Voltage	–	Ground	–
Body Current (with RF)	–	1 A	2 A
Collector Voltage	–	Ground	–
Collector Current (with RF)	9.0 A	9.5	11.5
Heater Voltage (dc or ac)	8.0 V	8.5 V	10.0 V
Heater Current	5.0 A	8.0 A	10.0 A
Solenoid Voltage	180 V	195 V	215 V
Solenoid Current	25 A	26 A	26.5 A
Grid Drive	+350 V	+500 V	+600 V
Grid Bias	–600 V	–800 V	–1000 V
Grid Current	–	15 mA	100 mA
Ion Pump Voltage	3.0 kV	3.3 kV	3.6 kV
Ion Pump Current	–	<5μ A	1 mA
MECHANICAL SPECIFICATIONS			
Weight:			
Solenoid	–	130 pounds	140 pounds
Tube	–	55 pounds	60 pounds
Cooling:			
Coolant	–	Water	–
Collector Flow Rate	4 gal/min	–	–
Collector Pressure Drop	–	15 psi	30 psi
Body Flow Rate	1.5 gal/min	–	–
Body Pressure Drop	–	15 psi	25 psi
Solenoid Flow Rate	2 gal/min	–	–
Solenoid Pressure Drop	–	15 psi	30 psi

*Designed to meet MIL-E-5400 Class 2

634H

C-Band Pulsed TWT

HUGHES

HUGHES AIRCRAFT COMPANY

ELECTRON DYNAMICS DIVISION

TYPICAL PERFORMANCE CURVE

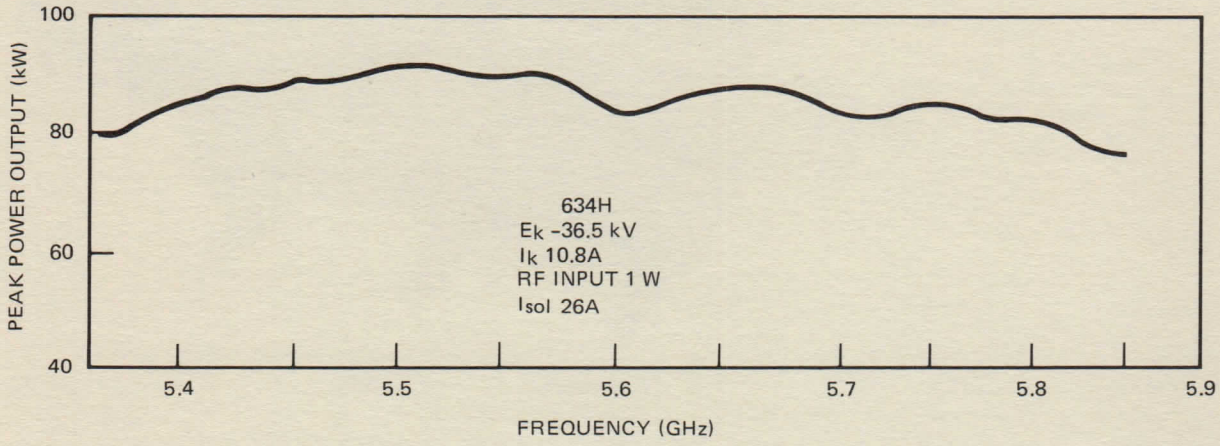

OUTLINE DRAWING

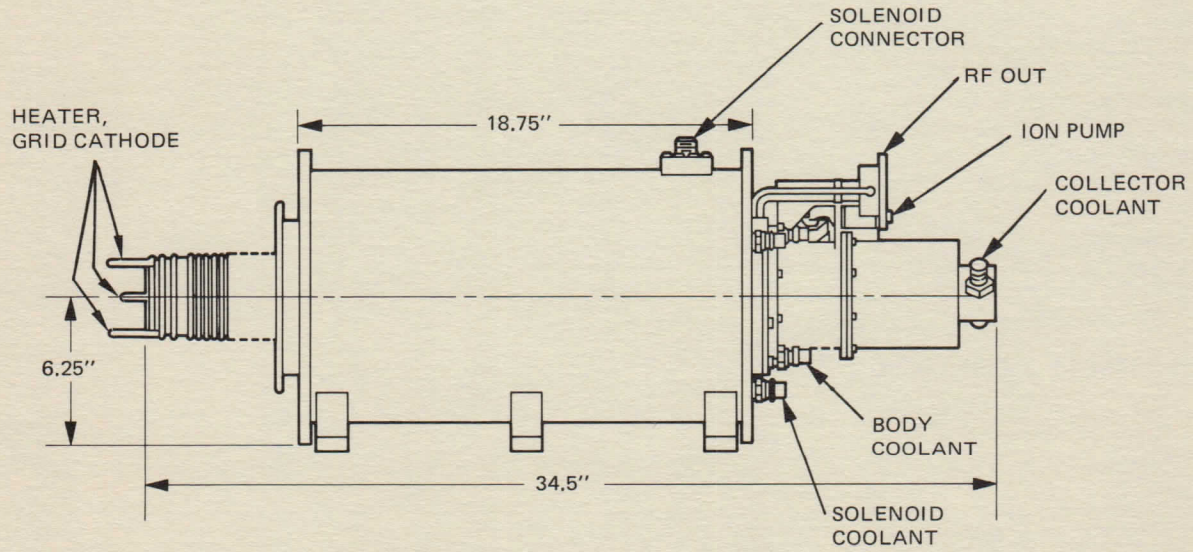

HUGHES
HUGHES AIRCRAFT COMPANY
ELECTRON DYNAMICS DIVISION / 3100 W. LOMITA BLVD. TORRANCE, CA. 90509 / TEL (213) 534-2121

Printed in U.S.A. – 8-73

HUGHES

HUGHES AIRCRAFT COMPANY

ELECTRON DYNAMICS DIVISION

641H

1.25 kW 4.0 - 8.0 GHz Pulsed TWT

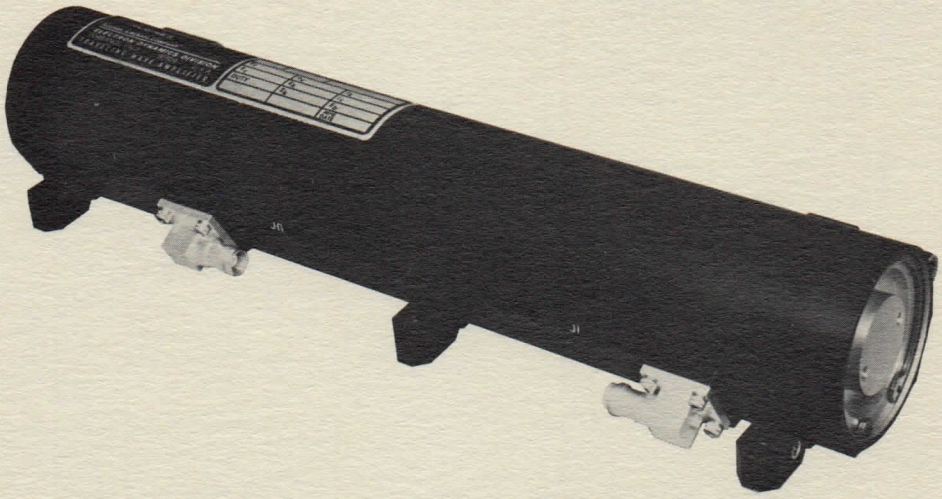

DESCRIPTION

The Hughes Model 641H is a rugged, lightweight, high power traveling-wave tube designed for MIL-E-5400 Class II environmental applications. The tube is of a highly reliable design of all metal-ceramic construction, periodic permanent magnet focusing, grid controlled, and is oil cooled. Output power levels in excess of one kilowatt at up to 10% duty cycle may be achieved with this device.

SPECIFICATIONS

Frequency	4.0 – 8.0 GHz
Power Output	1.25 kW minimum
Duty Cycle	up to 10%
Large Signal Gain	30 dB
Heater Voltage	6.3 V rms
Heater Current	3.8 A
Cathode Voltage	–9.75 kV
Cathode Current	1.8 A
Grid Drive Voltage	+200 V maximum
Grid Current	400 mA maximum
Grid Bias	–150 V
Collector Voltage	–5.6 kV
Collector Current	1.90 A
Weight	10 pounds (453.6 kg)
Length	14.5 inches (36.83 cm)
Cooling	Coolanol 35 or equivalent (10 psi at 1.5 gpm room ambient)
RF Input Connector	TNC
RF Output Connector	TNC

NOTE: All voltages with respect to cathode.

641H

1.25 kW 4.0 - 8.0 GHz Pulsed TWT

HUGHES

HUGHES AIRCRAFT COMPANY

ELECTRON DYNAMICS DIVISION

TYPICAL PERFORMANCE CURVE

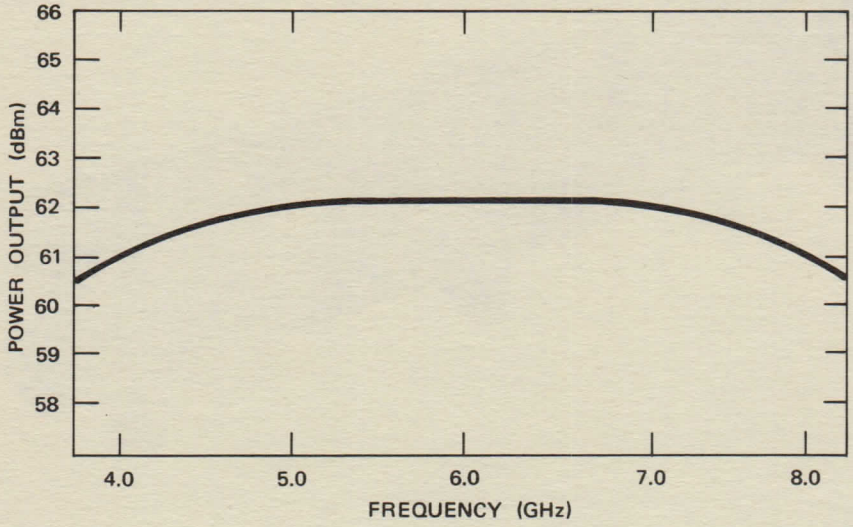

OUTLINE DRAWING

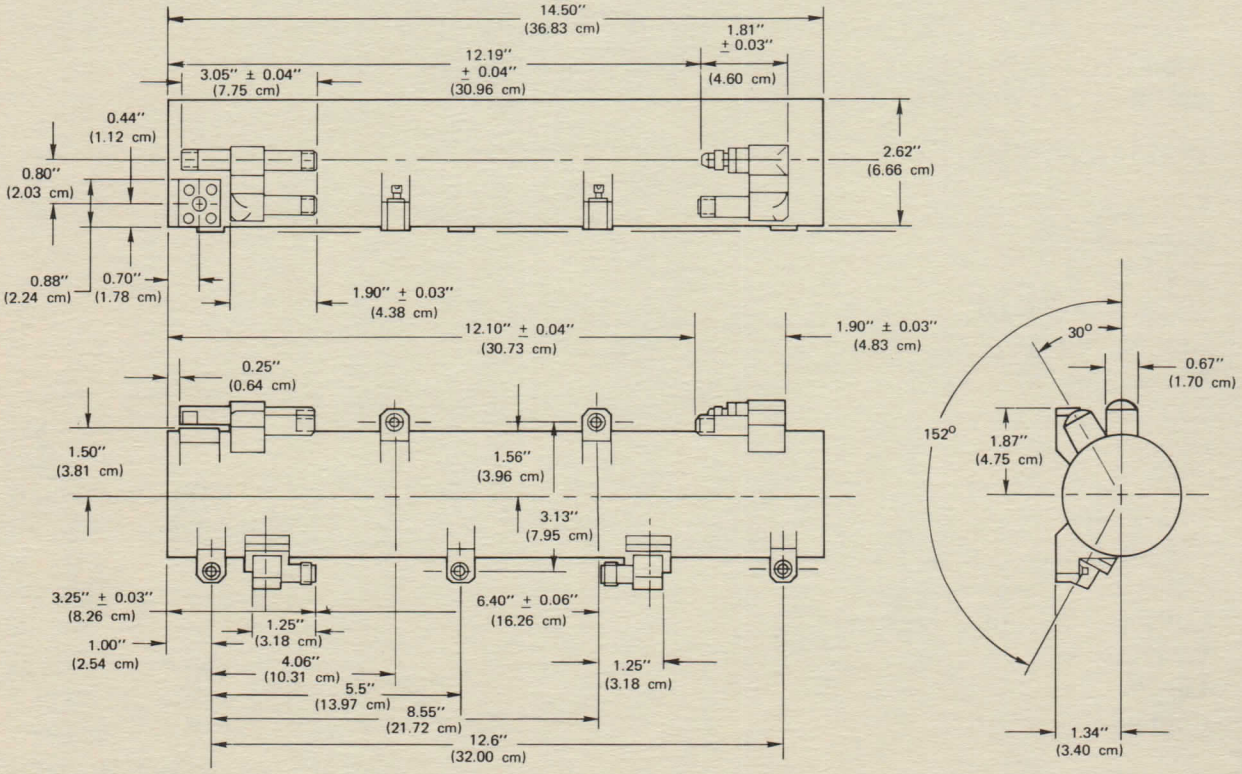

All specifications subject to change without notice.

HUGHES HUGHES AIRCRAFT COMPANY ELECTRON DYNAMICS DIVISION MICROWAVE TRAVELING-WAVE TUBE PRODUCTS 3100 West Lomita Boulevard, Torrance, California 90509, Tel (213) 534-2121

Printed in U.S.A. 12—74

HUGHES

HUGHES AIRCRAFT COMPANY

ELECTRON DYNAMICS DIVISION

656H

1kW C-BAND CW TWT

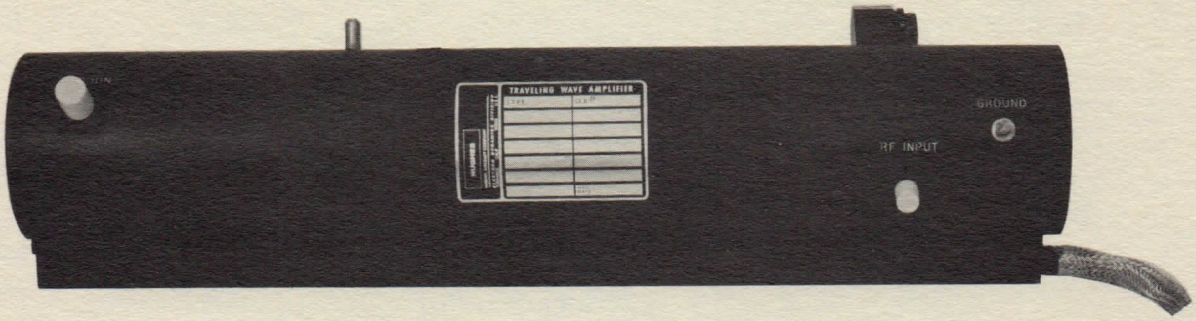

DESCRIPTION

The Hughes Model 656H is a 1.0 kW, CW broadband traveling-wave tube. The solenoid for focusing the beam is within the 3 inch diameter of the package. This results in a small, lightweight package with low pressure drop for the liquid cooling. The tube is designed for MIL-E-5400, Class II environments.

SPECIFICATIONS

Frequency	4.0 - 8.0 GHz
Power Output	1 kW Minimum
Duty Cycle	CW
Saturated Gain	27 dB Minimum
Filament Voltage	12.8 V Nominal
Filament Current	1.5 A Nominal
Cathode Voltage	8.5 kV Nominal
Cathode Current	1.3 A Nominal
Solenoid Voltage	40 V Nominal
Solenoid Current	23 A Nominal
Weight	20 Pounds
Length	20 Inches
Diameter	3 Inches
Cooling	Coolanol 35 or Equivalent
Environment	MIL-E-5400, Class II

656H

1kW C-BAND CW TWT

HUGHES

HUGHES AIRCRAFT COMPANY

ELECTRON DYNAMICS DIVISION

PERFORMANCE CURVE

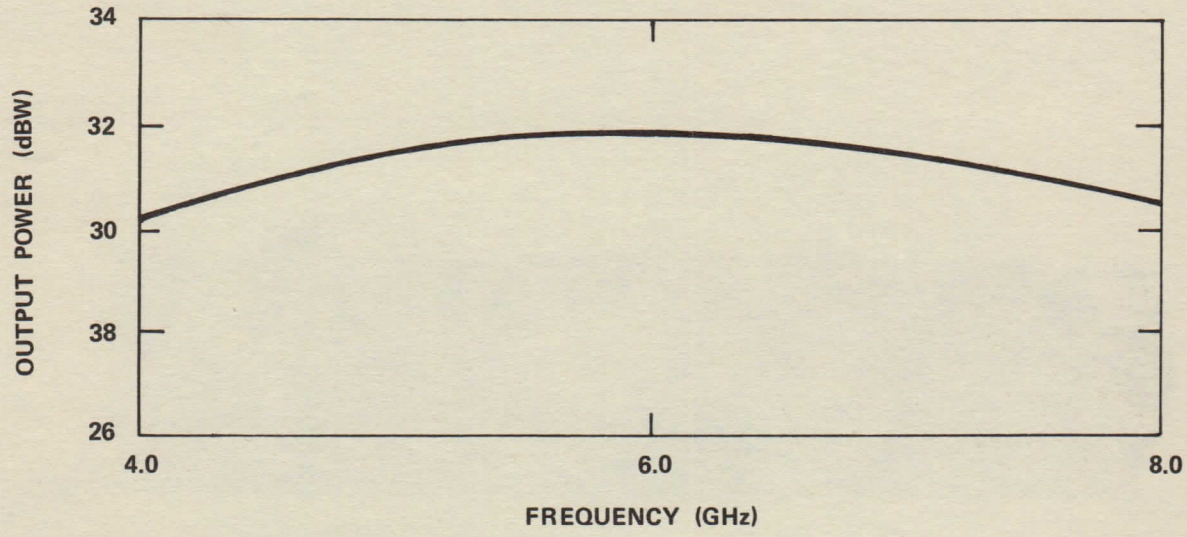

OUTLINE AND MOUNTING DRAWING

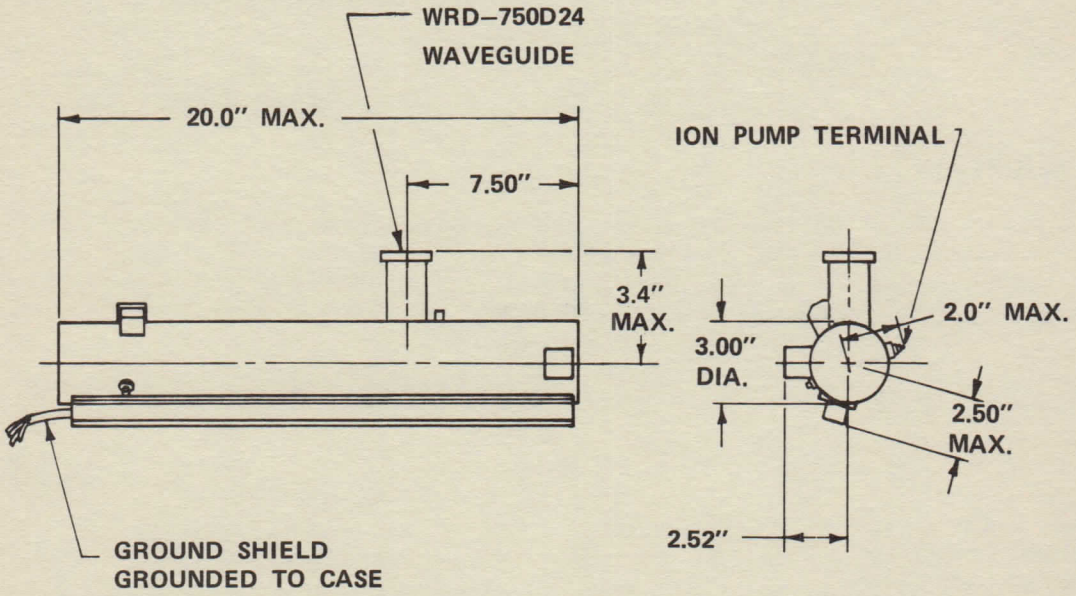

Specifications subject to change without notice.

Dimensions in inches unless otherwise noted.

HUGHES
HUGHES AIRCRAFT COMPANY
ELECTRON DYNAMICS DIVISION 3100 West Lomita Boulevard, Torrance, California 90509, Tel (213) 534-2121

Printed in U.S.A.—4-74

HUGHES

HUGHES AIRCRAFT COMPANY

ELECTRON DYNAMICS DIVISION

662H

400 W 5.925-6.425 GHz CW TWT

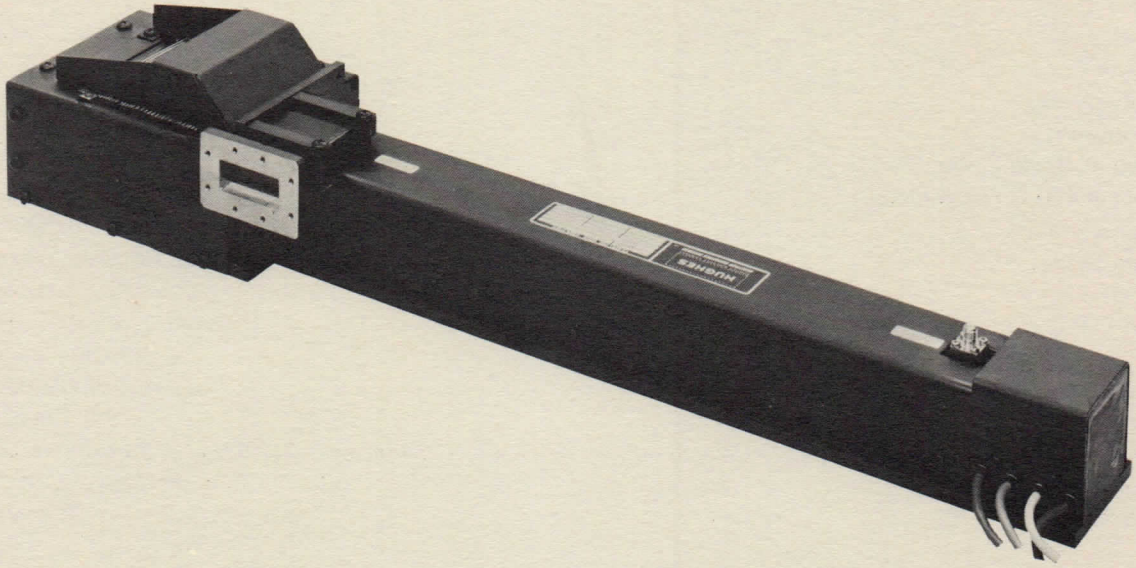

DESCRIPTION

The Hughes Model 662H traveling-wave tube is designed for use in satellite earth terminal transmitters. It is capable of more than 400 watts of CW RF output power over the frequency range of 5.925 to 6.425 GHz. Design and construction of this tube is based on Hughes' experience in the production of high power CW tubes (output powers greater than 1000 watts) and space qualified communications tubes that have won world-wide recognition for quality and reliability. The tube is constructed of metal-ceramic with PPM focusing and forced-air cooling. A modulating anode is utilized for fast turn-on and turn-off of beam current during normal operating sequencing and under fault conditions.

A standard "Pierce" design is used for the electron gun and the collector is a single stage depressed type incorporating integral fins for flow-through forced-air cooling. Alnico VIII magnets provide the focusing field. The helix circuit is supported on three beryllia support rods that are coated at their center sections with pyrolytic carbon to provide exceptional gain stability. The helix rod and support assembly is mounted in a barrel incorporating integral pole pieces for the periodic magnet focusing system. Compression contact between the barrel, rods and helix provides an excellent heat transfer path from the helix to the tube body. The tube body is conduction-cooled via its base-plate support.

The Model 662H offers a low profile package with heat deflectors for horizontal or vertical air flow (input and output). A threaded insert is provided at the tube collector for a thermal sensor. Detailed communication performance characteristics and test data are available upon request.

SPECIFICATIONS*

RF

Frequency	5.925-6.425 GHz minimum
Power Output	400 W minimum
Duty Cycle	CW
Bandwidth	500 MHz minimum
Gain at Rated Power Output	40 dB minimum
Gain at 100 W Power Output	45 dB minimum
Gain Variation	±0.5 dB maximum, 500 MHz
Gain Slope	0.05 dB/MHz maximum
Noise Figure	35 dB maximum
AM/PM Conversion	5°/dB maximum
Spurious Outputs	-70 dBc minimum
Phase Sensitivity	0.75°/V nominal
Input VSWR	2.0:1 maximum
Load VSWR	1.5:1 maximum for specification compliance. 2.0:1 maximum without damage
Harmonic Output	-10 dBc maximum at rated output power
Efficiency	25% nominal

ELECTRICAL

Heater Current	2.0 maximum
Heater Voltage	6.3 V nominal
Cathode Voltage (EK)	-7.5 to -8.3 kVdc
Cathode Current (IK)	400 mA maximum
Anode Voltage (Ea)	100-300 Vdc
Anode Current (Ia)	5.0 mA maximum
Body Current (Helix Current, Iw)	20 mA maximum
Collector Voltage (Eb)	50% ±5% of cathode voltage (EK)
Collector Current (Ib)	400 mA maximum

MECHANICAL

Size	see outline drawing
Weight	10 pounds (4.5 kg) nominal
Input Connector	SMA (female)
Output Connector	CMR-137F W/G flange
Power Connectors	Alden type 8112M (2)
Cooling	forced air

ENVIRONMENTAL

Operating	
Temperature Range	0-50°C
Altitude	up to 10,000 feet (3.05 km)
Non-Operating	
Temperature	-50°C to +85°C
Altitude	up to 50,000 feet (15.25 km)

*Subject to change without notice.

TYPICAL PERFORMANCE CURVE

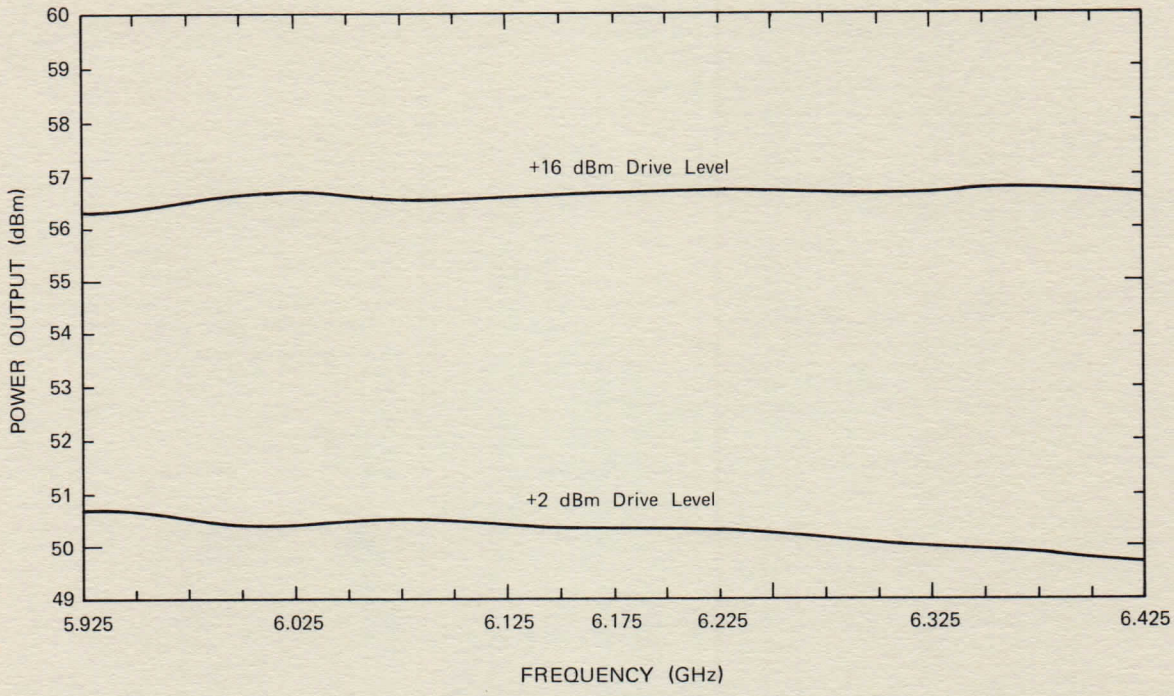

TYPICAL POWER OUTPUT VERSUS FREQUENCY

662H

400 W 5.925-6.425 GHz CW TWT

HUGHES

HUGHES AIRCRAFT COMPANY
ELECTRON DYNAMICS DIVISION

OUTLINE DRAWING

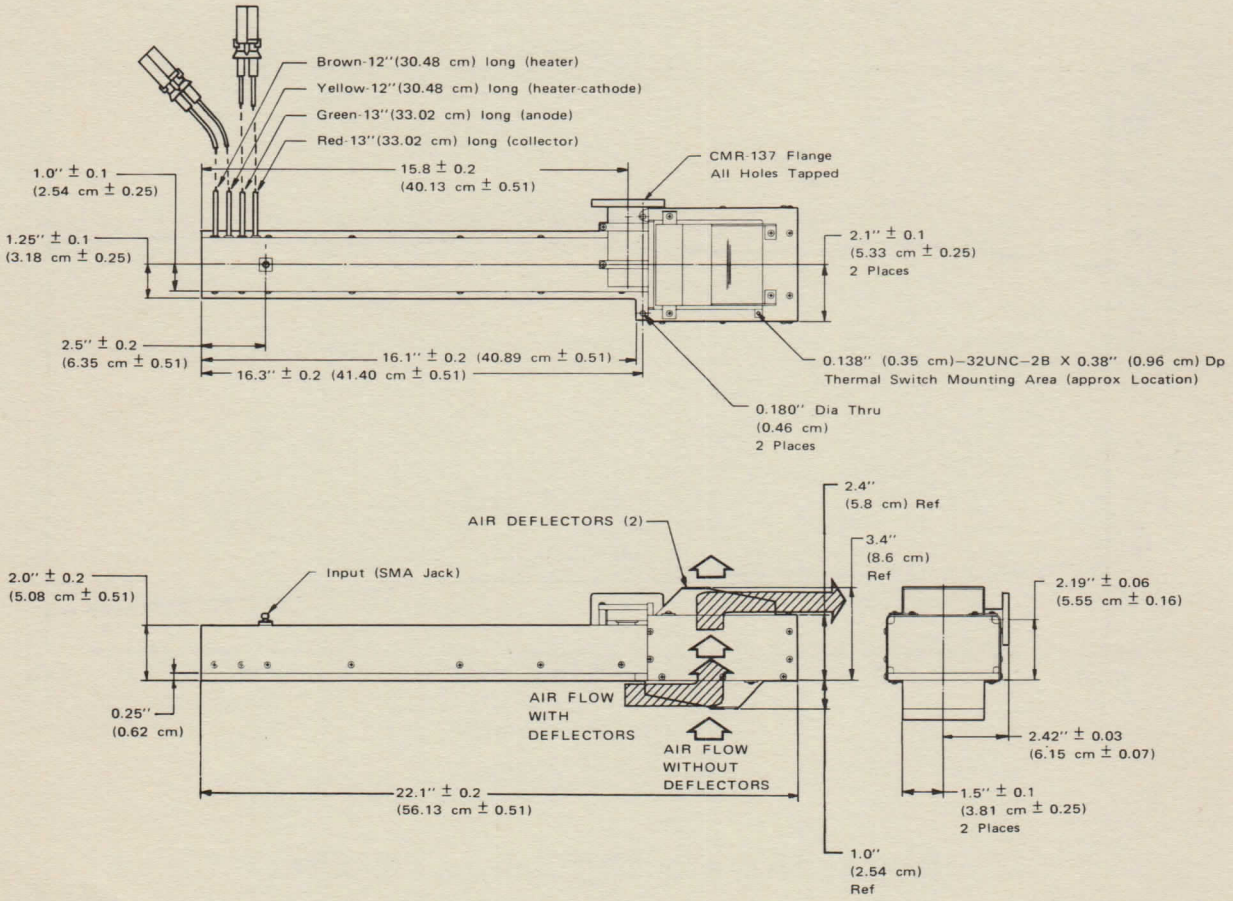

Your Local Representative:

HUGHES

ELECTRON DYNAMICS DIVISION

710H

10kW CW X-Band TWT

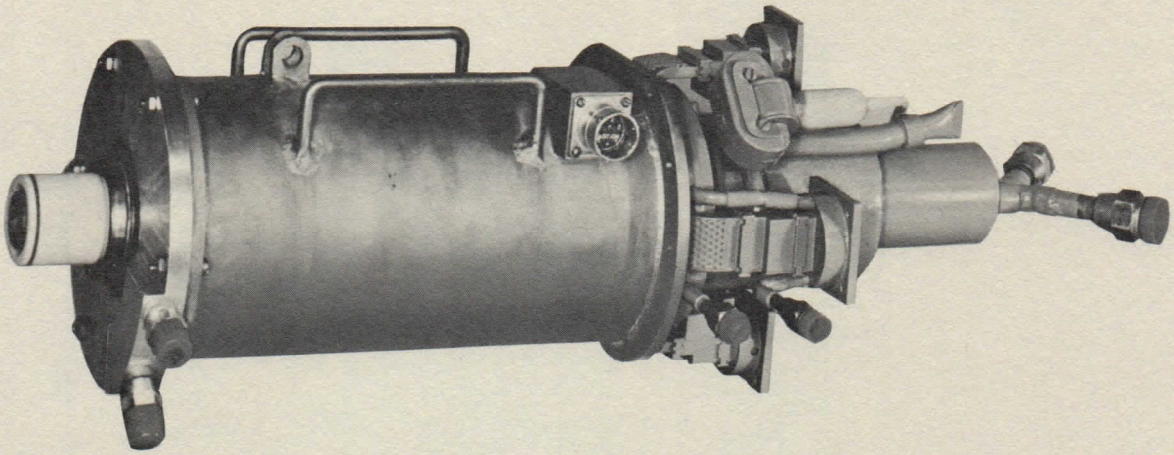

DESCRIPTION

The Hughes Model 710H is a compact, high power traveling-wave amplifier for use in communication terminals. Its features include high efficiency, high gain and depressed collector operation. Full bandwidth operation is obtained without mechanical or voltage adjustment.

PRELIMINARY SPECIFICATIONS

Frequency	8% bandwidth in X-band
Power Output	8-10 kW
Duty	CW
Gain	50 dB
Efficiency	35%
Beam Voltage	19 kV
Beam Current	2.2 A
Body Current	0.4 A maximum
Body to Collector Voltage	8 kV
Collector Current	1.8 A minimum
Heater Voltage	12 V
Heater Current	2.4 A
Solenoid Voltage	75 V
Solenoid Current	20 A
Cooling	liquid
Weight	60 pounds
Length	24 inches
Diameter	6¼ inches
Wave Guide Connections	
Output	UG-51
Input, Severs	UG-39

1. Overall efficiency including depressed collector.
Values are based on preliminary designs, and additional product refinement may be required for specific applications.

710H

10kW CW X-Band TWT

HUGHES

ELECTRON DYNAMICS DIVISION

PERFORMANCE CURVE

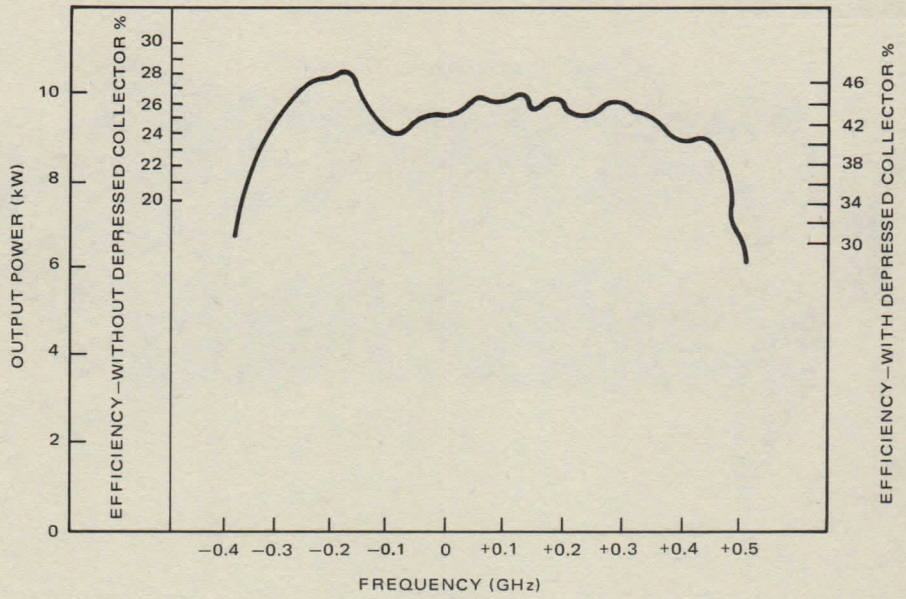

THE ABOVE GRAPH SHOWS TYPICAL PERFORMANCE WITH CONSTANT CATHODE AND COLLECTOR VOLTAGES AND FIXED RF INPUT. HIGHER EFFICIENCY (TO 48%) MAY BE OBTAINED BY ADJUSTING RF DRIVE AS A FUNCTION OF FREQUENCY.

OUTLINE & MOUNTING DRAWING

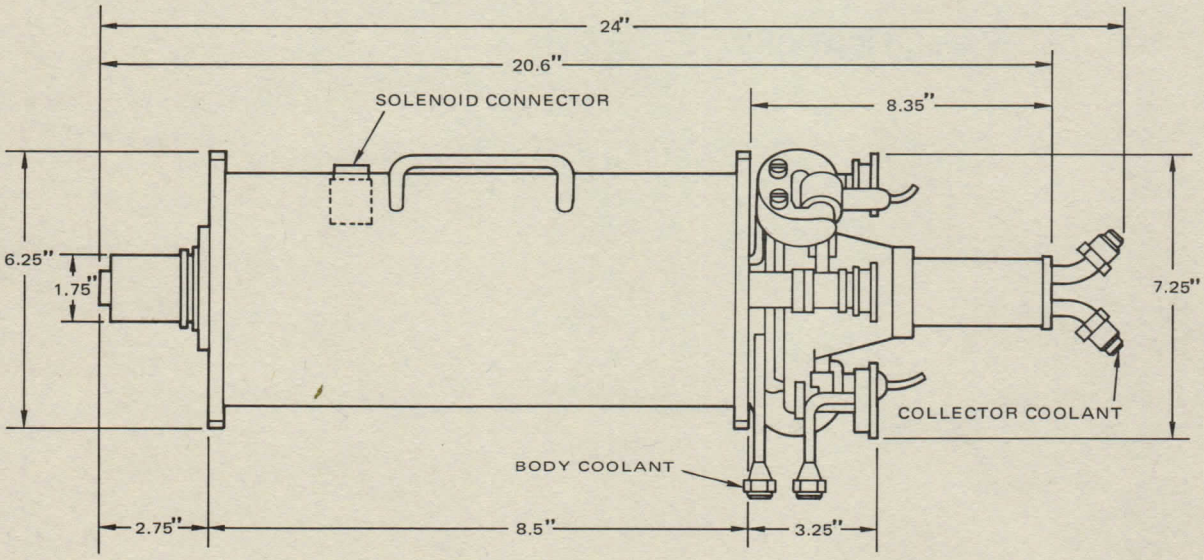

YOUR LOCAL REPRESENTATIVE

HUGHES
HUGHES AIRCRAFT COMPANY

ELECTRON DYNAMICS DIVISION / 3100 W. LOMITA BLVD. TORRANCE, CA. 90509/TEL (213) 534-2121

LITHO IN U.S.A. — 12-72

HUGHES

HUGHES AIRCRAFT COMPANY

ELECTRON DYNAMICS DIVISION

719H

X-Band Pulsed TWT

FEATURES

- 40 kW Peak Power
- Narrow Band
- Grid Modulation
- High Gain
- High Efficiency
- PPM Focusing
- Forced Air Cooling
- Lightweight
- Environmentalized*

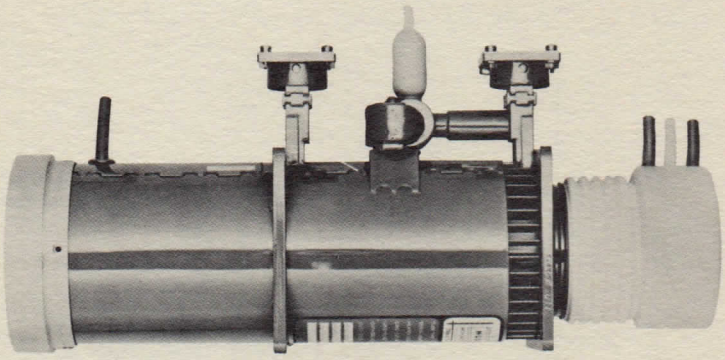

PERFORMANCE SPECIFICATIONS	MINIMUM	TYPICAL	MAXIMUM
Frequency	9.37 GHz	–	9.57 GHz
Output Power	40 kW	–	–
Saturated Gain	54 dB	56 dB	–
Duty	–	0.2%	0.3%
Efficiency	–	30%	–
ELECTRICAL PARAMETERS			
Cathode Voltage	-24.0 kV	-25.5 kV	-27.0 kV
Cathode Current	7 A	8 A	9.5 A
Body Voltage	–	ground	–
Body Current (with RF)	–	1.1 A	2 A
Collector Voltage	–	ground	–
Collector Current (with RF)	5.0 A	5.9 A	7.5 A
Heater Voltage (dc or ac)	10 V	11 V	12 V
Heater Current	2 A	3 A	4 A
Grid Drive	+175 V	+250 V	+325 V
Grid Bias	-325 V	-400 V	-475 V
Grid Current	–	1 A	2 A
Ion Pump Voltage	+3.0kV	+3.3 kV	+3.6 kV
Ion Pump Current	–	<5μA	1 mA
MECHANICAL SPECIFICATIONS			
Weight	–	13.5 pounds	–
Cooling:			
Coolant Type	–	Forced air	–
Flow Rate	100 cfm	–	–
Pressure Drop	–	–	5 inches H_2O

*Designed to meet MIL-E-5400 Class 2

719H

X-Band Pulsed TWT

HUGHES

HUGHES AIRCRAFT COMPANY

ELECTRON DYNAMICS DIVISION

TYPICAL PERFORMANCE CURVE

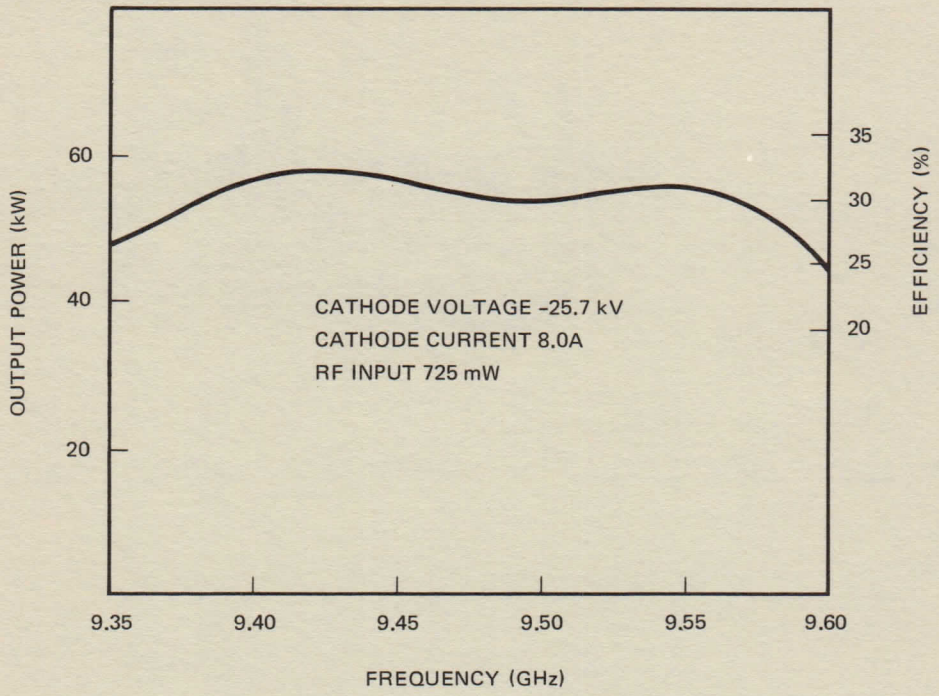

OUTLINE DRAWING

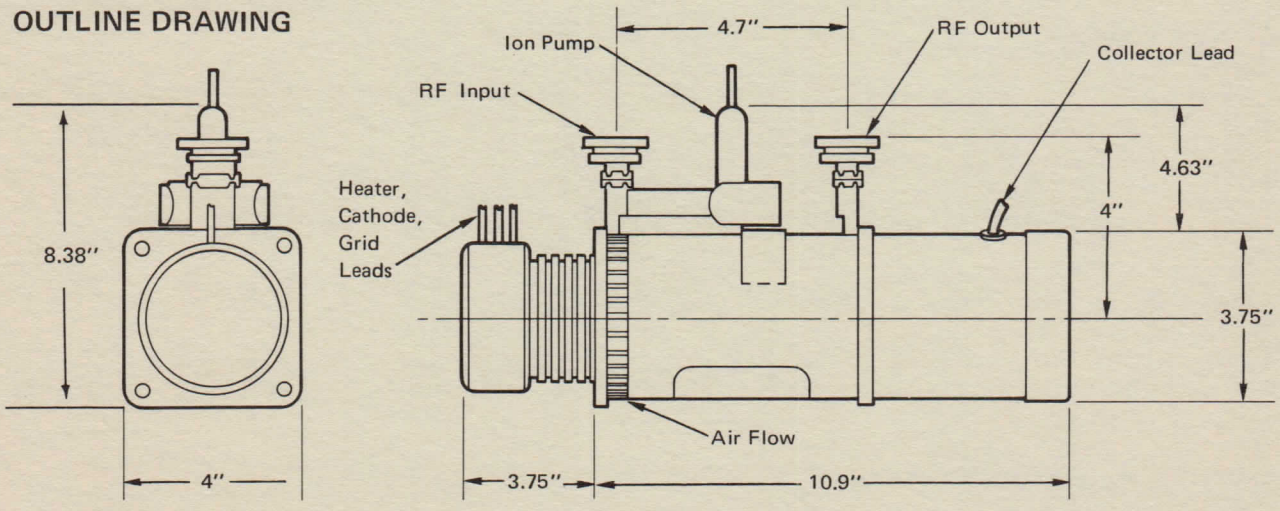

YOUR LOCAL REPRESENTATIVE

HUGHES HUGHES AIRCRAFT COMPANY **ELECTRON DYNAMICS DIVISION** / 3100 W. LOMITA BLVD. TORRANCE, CA. 90509 / TEL (213) 534-2121

Printed in U.S.A. -8-73

HUGHES

HUGHES AIRCRAFT COMPANY

ELECTRON DYNAMICS DIVISION

745H

1.2 KW CW X-Band TWT

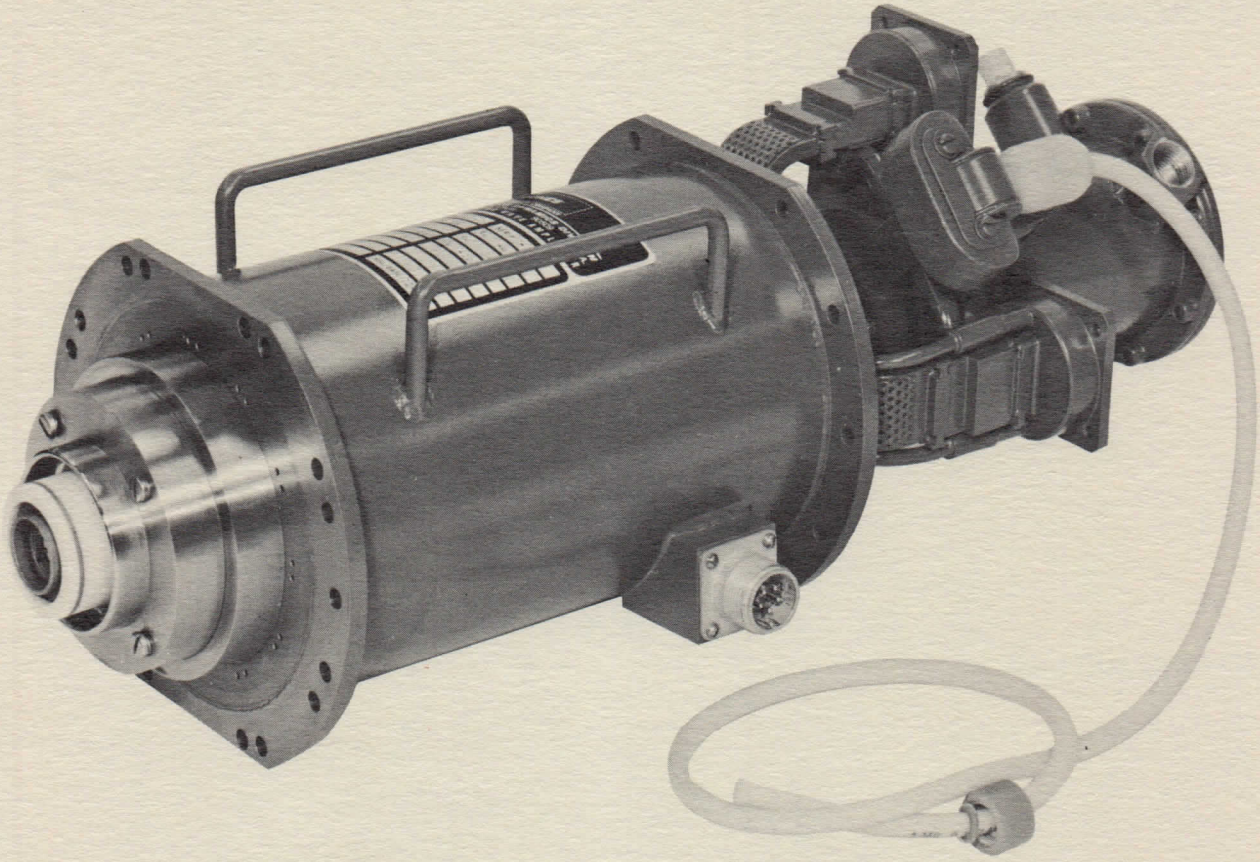

DESCRIPTION

The Hughes Model 745H traveling-wave tube is a solenoid focussed device capable of providing 1.5 kW of continuous RF power over the frequency range of 7.9 to 8.4 GHz. This tube has been specifically designed to achieve optimized performance for communications ground terminal transmitter applications.

The 745H employs a slip-on solenoid for beam focussing. The 745H can be provided with an integral solenoid that minimizes tube weight while providing improved performance. This technique, perfected by the Hughes Aircraft Company, Electron Dynamics Division, allows the solenoid to be wrapped directly onto the tube body.

Minimum gain variations and improved phase linearity characteristics have been achieved by the use of special patented internal terminations, and an external equalizer. *

*U.S. Patent Number 3,181,023

SPECIFICATIONS

ELECTRICAL PARAMETERS	MINIMUM	TYPICAL	MAXIMUM
Beam Voltage	−9.5 kV	−10.0 kV	−10.5 kV
Beam Current	0.80 A	0.85 A	0.93 A
Body Current (RF)	—	20 mA	150 mA
Collector Voltage	0	−4.0 kV	−4.6 kV
Collector Current (RF)	0.60 A	0.84 A	0.92 A
Heater Voltage	8.5 V	9.0 V	9.5 V
Heater Current	3.25 A	3.5 A	3.75 A
Solenoid Voltage	47 V	56 V	65 V
Solenoid Current	14.5 A	15 A	15.5 A
Ion Pump Voltage	3.0 kV	3.3 kV	3.6 kV
Ion Pump Current	—	<5 μA	1 mA

RF PARAMETERS			
Output Power	1.2 kW	1.4 kW	1.7 kW
Input Power	0.6 W	1 W	1.2 W
Saturated Gain	27 dB	31 dB	33 dB
Duty	—	CW	—
Frequency	7.9 GHz	—	8.4 GHz
Phase Sensitivity (Cathode Voltage)	—	0.3°/V	0.4°/V
Amplitude Sensitivity (Cathode Voltage)	—	0.008 dB/V	0.010 dB/V
Gain Variation (Saturated)	—	0.06 dB/MHz	0.1 dB/MHz
Gain Variation (Small Signal)	—	0.06 dB/MHz	0.1 dB/MHz
Efficiency (Depressed Collector)	25%	30%	35%

MECHANICAL			
Coolant Flow Rates (Coolanol 25)	2 gal/min	—	—
Pressure Drop	—	35 psi	45 psi
Weight	—	42 lbs	45 lbs

WAVEGUIDE CONNECTIONS			
Input	—	UG-51	—
Output	—	UG-51	—

PERFORMANCE CURVES

NOTE: The following curves illustrate typical performance but should not be used for design limits without contacting Hughes Electron Dynamics Division. The curves were obtained with the tube operating under typical operating conditions of: E_k = -9.85 kV; E_b = -4.6 kV; I_b = 830 mA; I_{body} = 20 mA; I_{sol} = 15.0 A.

SATURATED OUTPUT POWER

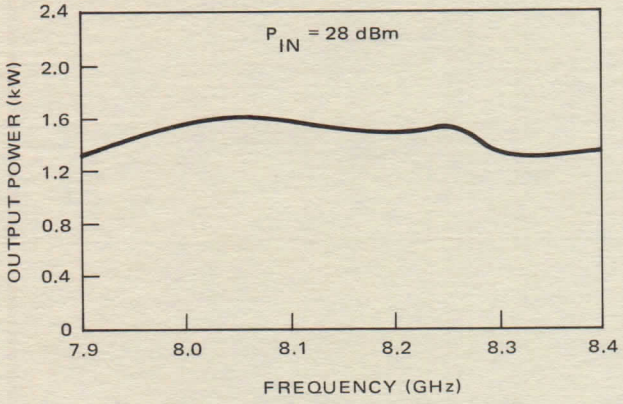

SMALL SIGNAL GAIN

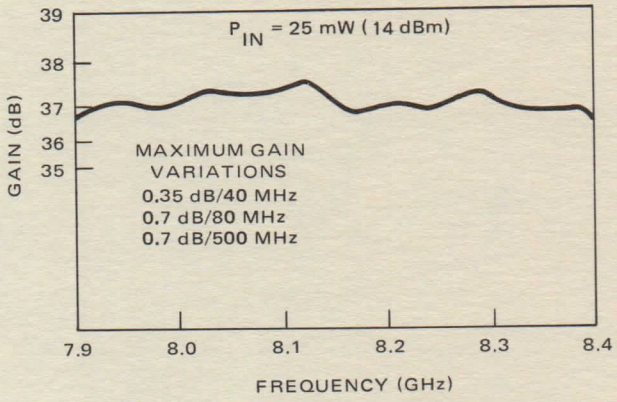

PHASE LINEARITY AT SMALL SIGNAL

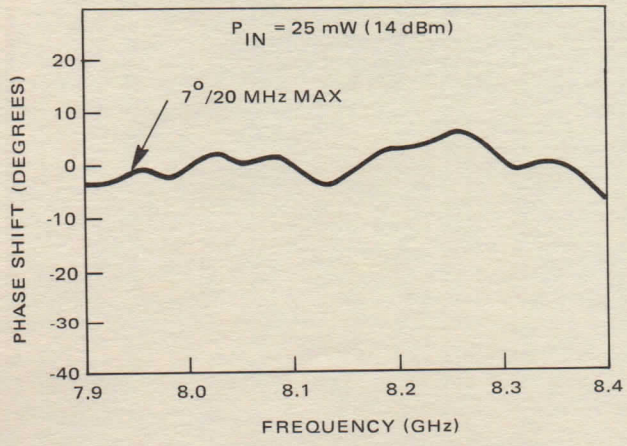

THIRD ORDER INTERMODULATION PRODUCTS VERSUS OUTPUT POWER

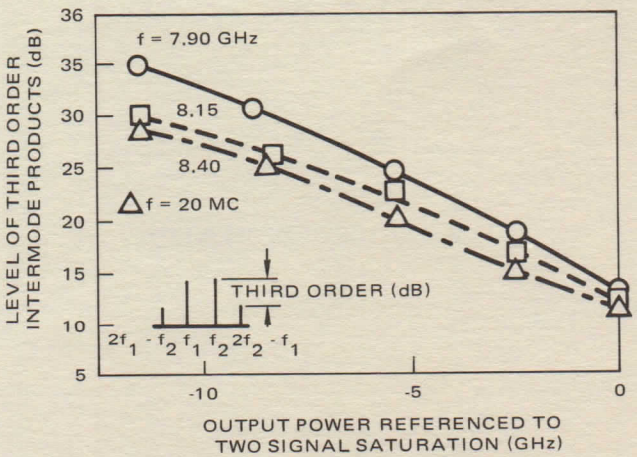

745H

1.2 KW CW X-Band TWT

HUGHES

HUGHES AIRCRAFT COMPANY

ELECTRON DYNAMICS DIVISION

OUTLINE AND MOUNTING DRAWING

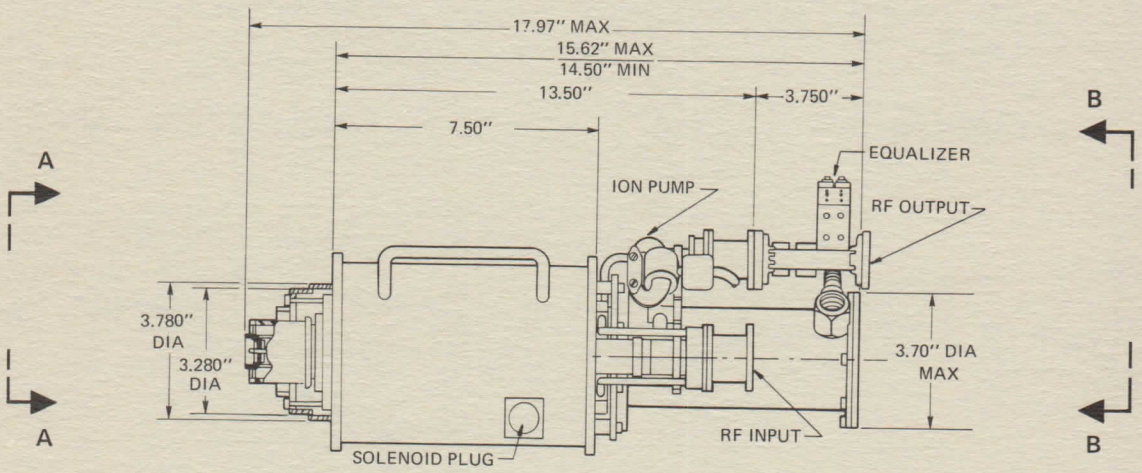

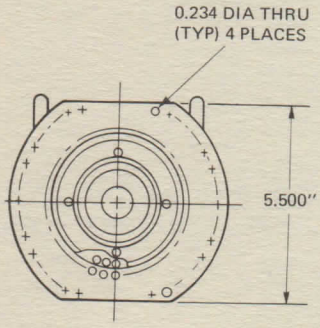

VIEW A-A

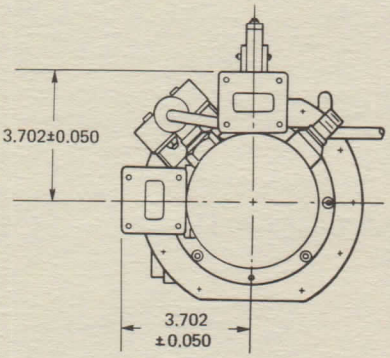

VIEW B-B

YOUR LOCAL REPRESENTATIVE

HUGHES ELECTRON DYNAMICS DIVISION / 3100 W. LOMITA BLVD. TORRANCE, CA. 90509/TEL (213) 534-2121

HUGHES AIRCRAFT COMPANY

Printed in U.S.A. 8-73

HUGHES

HUGHES AIRCRAFT COMPANY

ELECTRON DYNAMICS DIVISION

750H

25 kW X-band Pulsed TWT

FEATURES

- 25 kW Peak Power
- Broadband
- Cathode Pulsed
- High Gain
- High Efficiency
- PPM Focusing
- Air Cooled

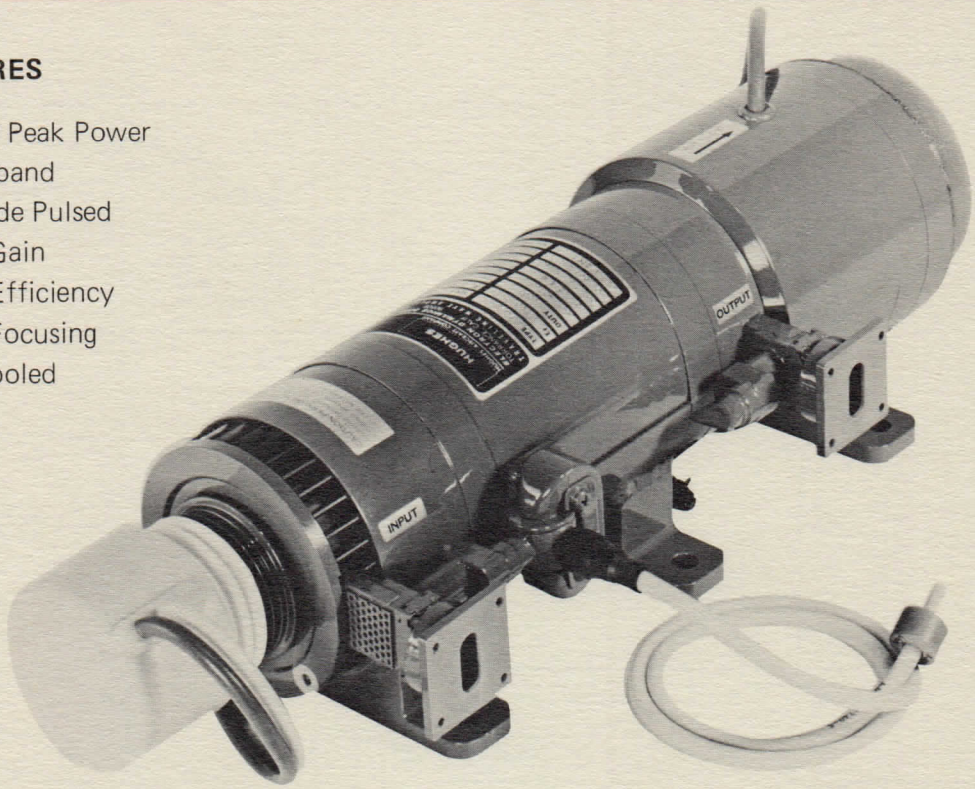

DESCRIPTION

The 750H is a broadband, high power traveling-wave tube. This production type has high efficiency with high gain per unit length; 25 kW peak power is attained in this lightweight, air cooled alinco permanent magnet focused TWT. The 750H is designed to meet MIL-E-5400 Class 1A specifications. Gridded versions of this tube are also available.

SPECIFICATIONS*

Frequency**	9.0 – 10.0 GHz
Power Out	25 kW
Minimum Efficiency	30%
Duty	1%
Gain	47 dB
Cathode Voltage	–24 kV
Cathode Current	5.5 A
Collector Voltage	–11 kV
Heater Voltage	11 V
Heater Current	3.8 A
Weight	27 pounds (12.25 kg)
Length	18.50 inches (46.99 cm)
Cooling	forced air

*All specifications are subject to change without prior notice.

**This is a typical frequency band; the tube can be made with center frequency anywhere in X-band as required.

HUGHES

HUGHES AIRCRAFT COMPANY

ELECTRON DYNAMICS DIVISION

750H

25 kW X-band Pulsed TWT

TYPICAL PERFORMANCE CURVE

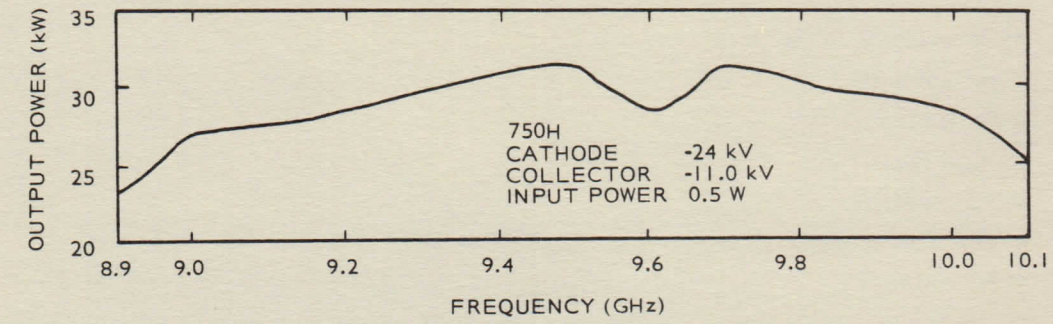

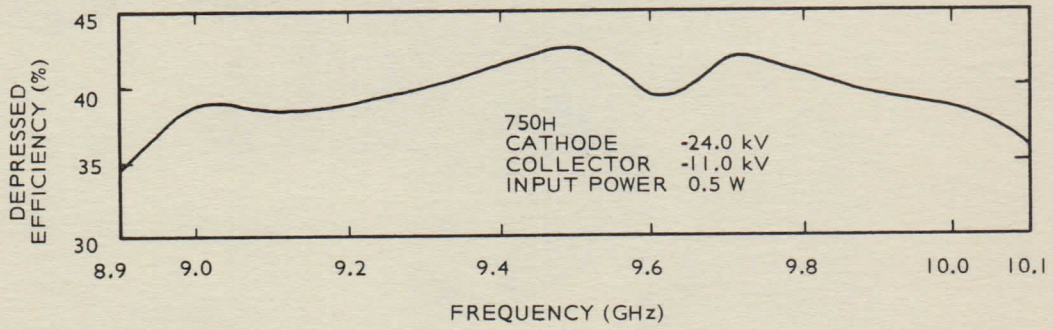

OUTLINE DRAWING

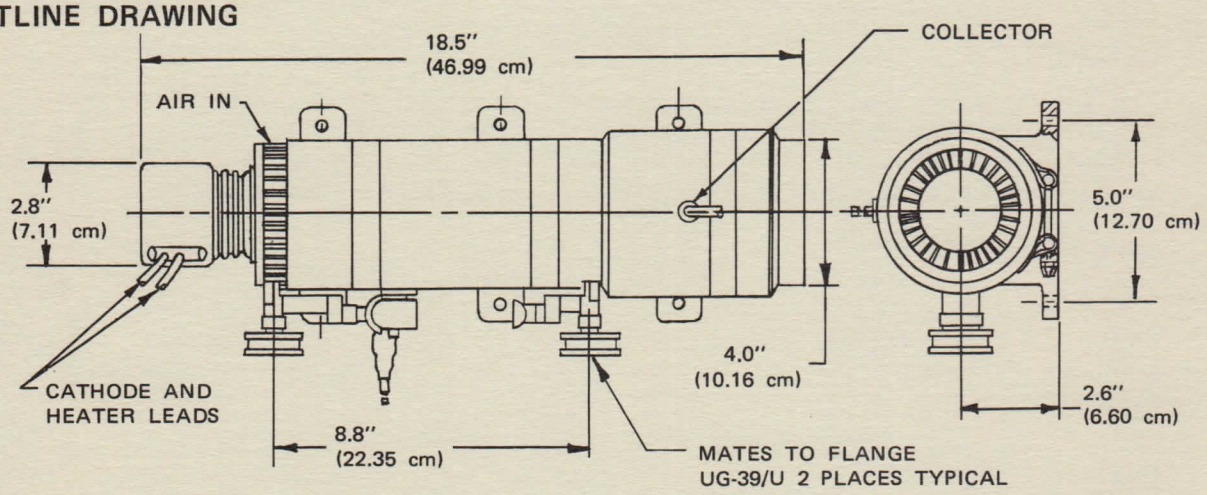

HUGHES ELECTRON DYNAMICS DIVISION MICROWAVE TRAVELING-WAVE TUBE PRODUCTS 3100 West Lomita Boulevard, Torrance, California 90509, Tel (213) 534-2121

HUGHES AIRCRAFT COMPANY

Printed in U.S.A. 7-75

HUGHES

HUGHES AIRCRAFT COMPANY

ELECTRON DYNAMICS DIVISION

751H

X-Band Pulsed TWT

FEATURES

- 50 kW Peak Power
- Broadband
- Shadow Grid Modulation
- High Gain
- High Efficiency
- PPM Focusing
- Liquid Cooling
- Environmentalized*

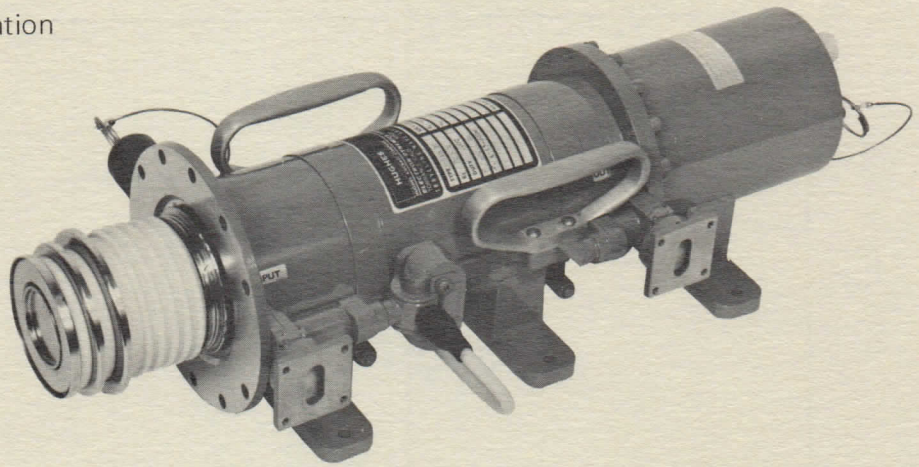

PERFORMANCE SPECIFICATIONS	MINIMUM	TYPICAL	MAXIMUM
Frequency	8.8 GHz	–	9.7 GHz
Output Power (Peak)	50 kW	–	–
Saturated Gain	51 dB	52 dB	–
Duty	–	1%	2%
Depressed Efficiency	–	35%	–
ELECTRICAL SPECIFICATIONS			
Cathode Voltage	–31 kV	–32 kV	–33 kV
Cathode Current	7.0 A	7.6 A	8.1 A
Body Voltage	–	ground	–
Body Current (with RF)	–	0.9 A	1.8 A
Collector Voltage	0 kV	–13 kV	–14 kV
Collector Current (with RF)	5.2 A	6.7 A	8.1 A
Heater Voltage (dc or ac)	9.5 V	10.5 V	11.5 V
Heater Current	2.5 A	3.5 A	4.5 A
Grid Drive	+325 V	+400 V	+475 V
Grid Bias	–450 V	–500 V	–550 V
Grid Current	–	25 mA	75 mA
Ion Pump Voltage	+3.0 kV	+3.3 kV	+3.6 kV
Ion Pump Current	–	<5 μA	1 mA
MECHANICAL SPECIFICATIONS			
Weight	–	25 pounds (11.36 kg)	–
Cooling:			
Coolant	–	FC 77 or Equivalent	–
Flow Rate	3.5 gal/min	–	–
Pressure Drop	–	–	30 psi

*Designed to meet MIL-E-5400 Class 2

All specifications are subject to change without prior notice.

751H

X-Band Pulsed TWT

HUGHES

HUGHES AIRCRAFT COMPANY

ELECTRON DYNAMICS DIVISION

TYPICAL PERFORMANCE CURVE

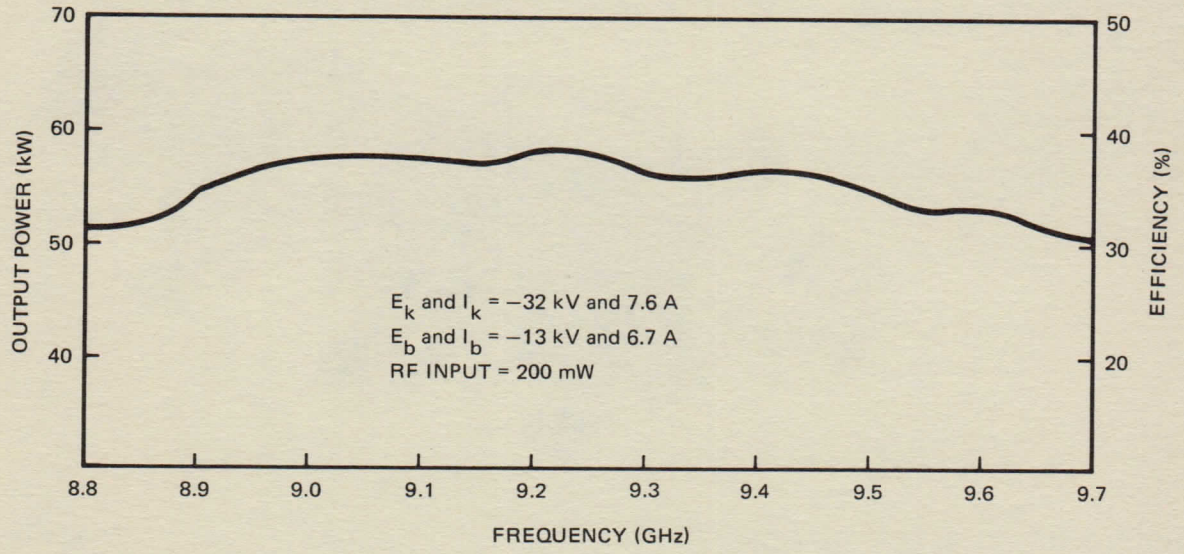

OUTLINE DRAWING

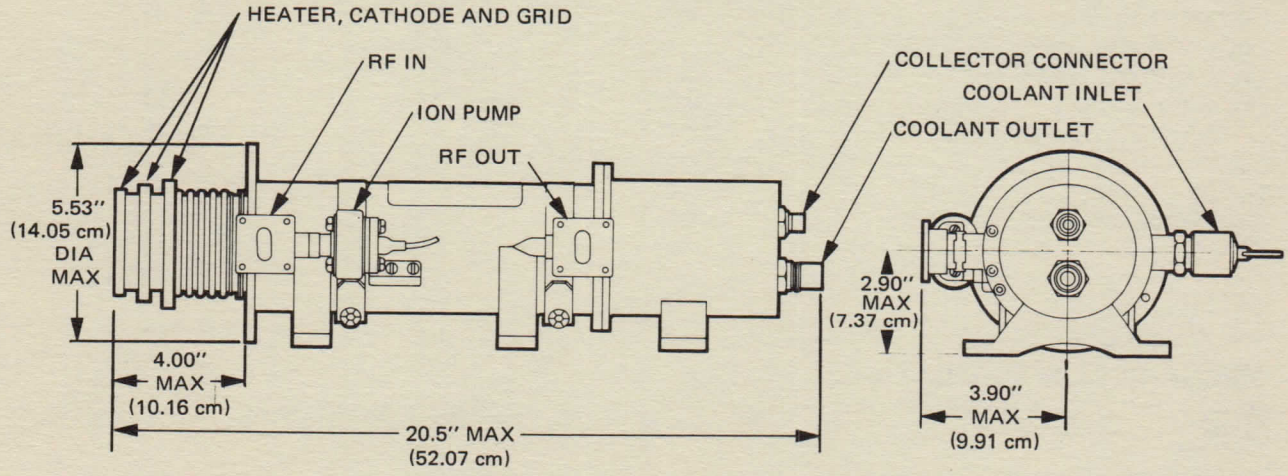

HUGHES ELECTRON DYNAMICS DIVISION
HUGHES AIRCRAFT COMPANY
3100 West Lomita Boulevard, P.O.Box 2999, Torrance, California 90509, Tel (213) 517-6000

Printed in U.S.A. 2/82 AL

HUGHES

HUGHES AIRCRAFT COMPANY

ELECTRON DYNAMICS DIVISION

752H

100 kW X-band Pulsed TWT

FEATURES

- 100 kW Peak Power
- Broadband
- Low Insertion Loss
- High Efficiency
- Cathode Pulsed
- PPM Focusing
- Liquid Cooled
- Environmentalized

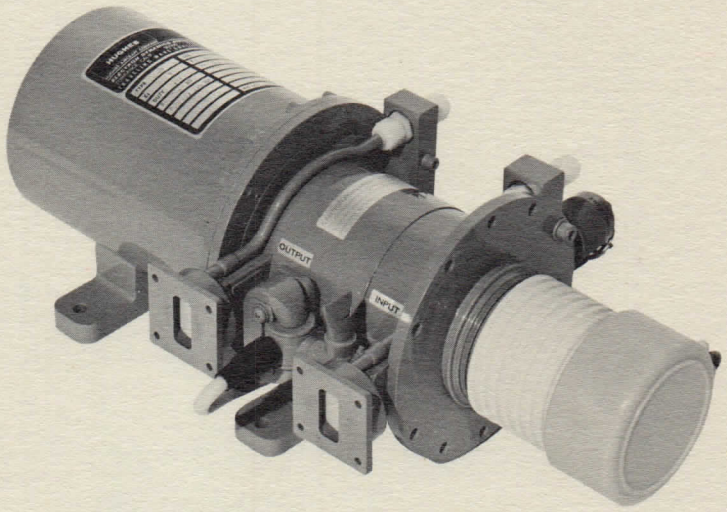

DESCRIPTION

The 752H is a broadband, high power traveling-wave tube. This production type has high efficiency with high gain per unit length. Peak power of 100 kW and depressed efficiency of 35% are attained in this lightweight, liquid cooled, Alnico permanent magnet focused TWT. The 752H is designed to meet MIL-E-5400 Class II specifications.

SPECIFICATIONS *

Frequency	8.4 - 9.4 GHz
Minimum Power Output	100 kW
Depressed Efficiency	30%
Duty	1%
Gain	16 dB
Maximum Insertion Loss	1.5 dB
Cathode Voltage	-50 kV
Cathode Current	15 A
Collector Voltage	-20 kV
Heater Voltage	10 V
Heater Current	5 A
Weight	30 pounds (13.61 kg)
Length	18 inches (45.72 cm)
Cooling	5 GPM FC-77 or Equivalent

Values are based on typical designs, and additional product refinement may be required for specific applications.

*All specifications are subject to change without prior notice.

752H

100 kW X-band Pulsed TWT

HUGHES

HUGHES AIRCRAFT COMPANY

ELECTRON DYNAMICS DIVISION

TYPICAL PERFORMANCE CURVE

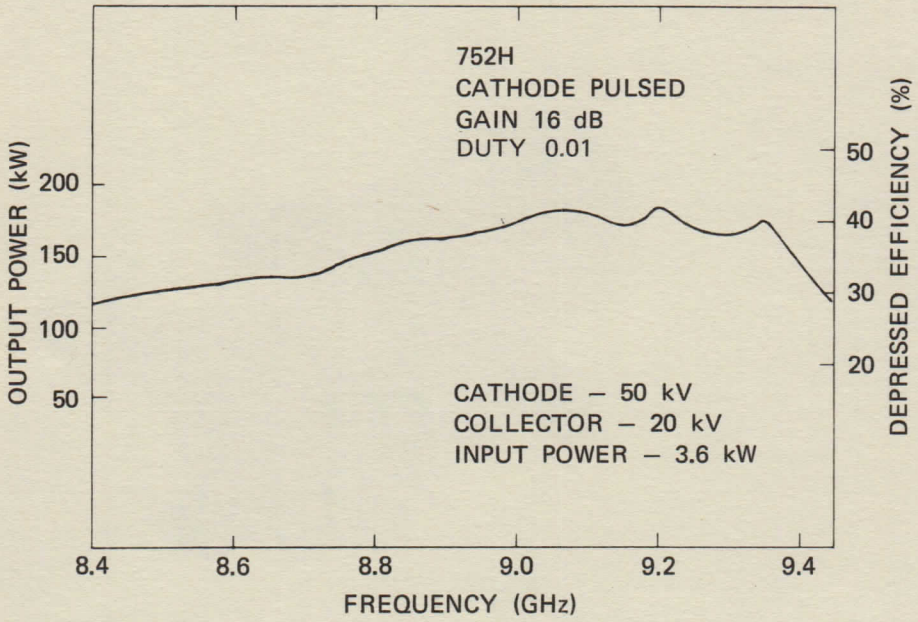

OUTLINE DRAWING

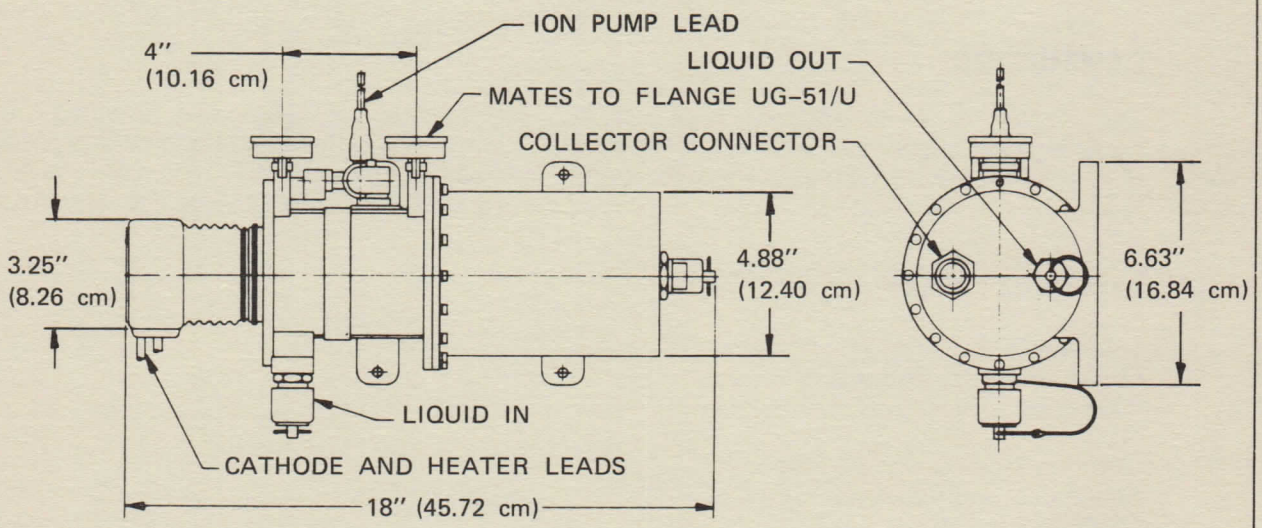

These date are typical values. For operating instructions and electrical characteristics, contact our field engineers listed below.

HUGHES ELECTRON DYNAMICS DIVISION MICROWAVE TRAVELING-WAVE TUBE PRODUCTS 3100 West Lomita Boulevard, Torrance, California 90509, Tel (213) 534-2121

HUGHES AIRCRAFT COMPANY

Printed in U.S.A. 7-75

HUGHES

HUGHES AIRCRAFT COMPANY

ELECTRON DYNAMICS DIVISION

756H

X-Band Pulsed High Power TWT

FEATURES

- 9 kW Peak Power
- 8% Bandwidth
- High Efficiency
- High Gain
- Lightweight
- Shadow Grid Modulation
- Integral Solenoid Focusing
- Liquid Cooling

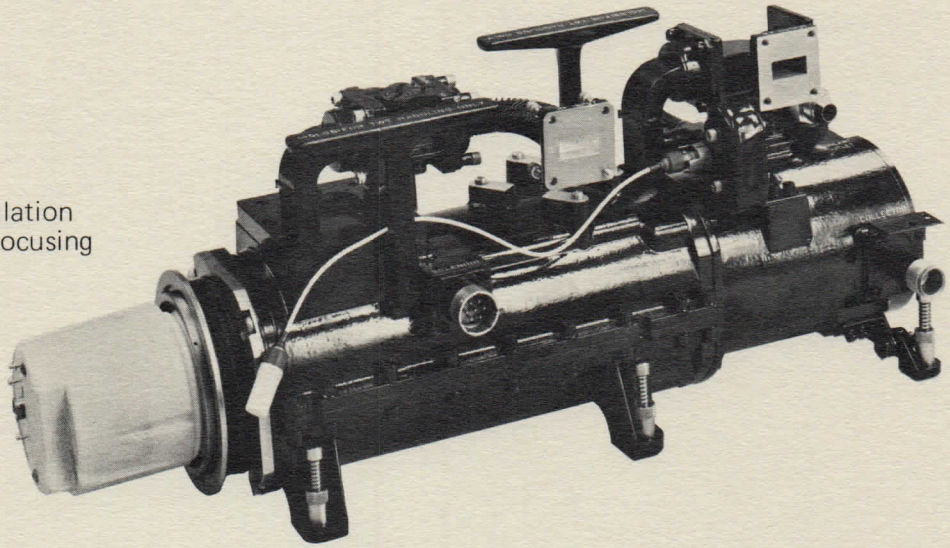

DESCRIPTION

The Hughes model 756H is a lightweight integral solenoid focused traveling-wave tube. This tube provides 9 kW of broadband RF power at duty cycles in excess of 50%. The modulation versatility of a shadow gridded electron gun and the convenience of single circuit oil cooling make it a natural for airborne radar systems.

PERFORMANCE SPECIFICATIONS	MINIMUM	TYPICAL	MAXIMUM
Frequency Bandwidth	8%	10%	—
Output Power	7.5 kW	9.0 kW	12.0 kW
Saturated Gain	54 dB	—	—
Duty	—	0.5	—
Depressed Efficiency	30%	—	—
ELECTRICAL PARAMETERS			
Cathode Voltage	−17.5 kV	−18.0 kV	−18.5 kV
Cathode Current	—	—	2.55 A
Body Voltage	—	ground	—
Body Current (with RF)	—	0.25 A	0.3 A
Collector Voltage	−5 kV	−6.5 kV	−7 kV
Collector Current (with RF)	—	2.1 A	2.35 A
Anode Voltage	—	ground	—
Heater Voltage (dc or ac)	11 vdc	—	14 vdc
Heater Current	3.3 adc	3.6 adc	4.0 adc
Solenoid Voltage	70 V	110 V	115 V
Solenoid Current	14 A	20 A	25 A
Grid Drive	270 V	330 V	400 V
Grid Bias	−200 V	−220 V	−300 V
Grid Current	—	2 mA	15 mA
Ion Pump Voltage	2.7 kV	3.0 kV	3.3 kV
Ion Pump Current	—	0.1 μA	2.0 μA

756H

X-Band Pulsed High Power TWT

HUGHES

HUGHES AIRCRAFT COMPANY

ELECTRON DYNAMICS DIVISION

MECHANICAL SPECIFICATIONS	MINIMUM	TYPICAL	MAXIMUM
Weight	—	49 pounds	—
Cooling:			
Coolant Type	oil	—	—
Flow Rate	3.0 gpm	3.3 gpm	—
Pressure Drop	10 psi	15 psi	—

TYPICAL PERFORMANCE CURVE

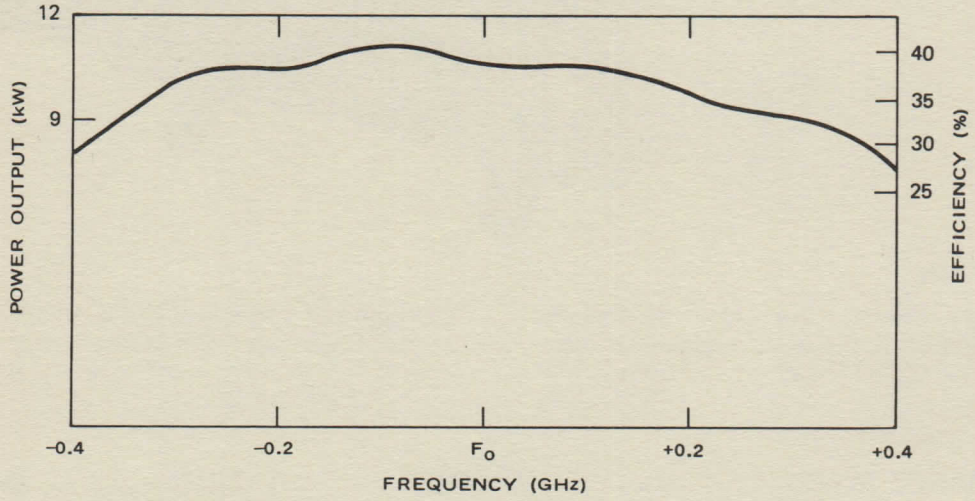

OUTLINE DRAWING

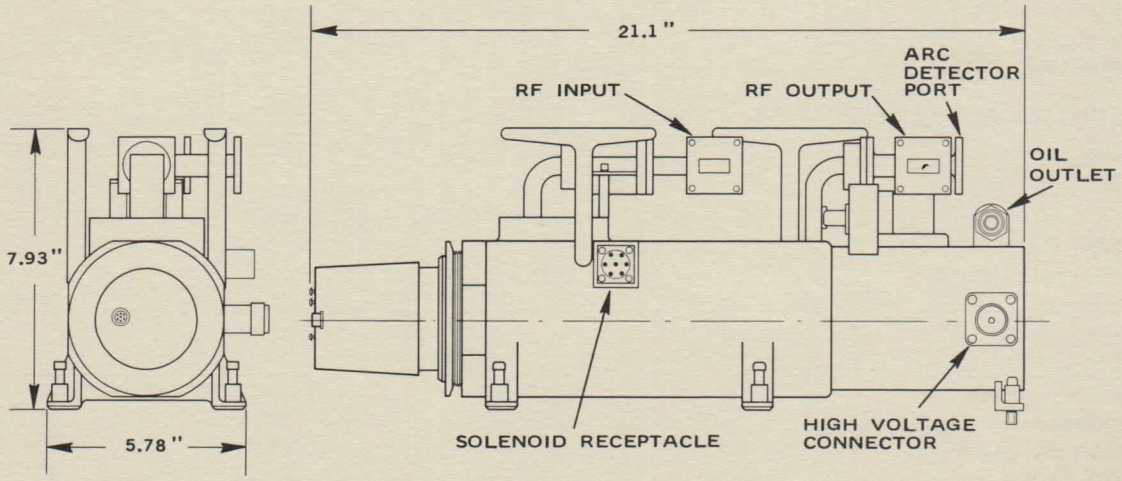

HUGHES
HUGHES AIRCRAFT COMPANY

MICROWAVE TRAVELING-WAVE TUBE PRODUCTS
ELECTRON DYNAMICS DIVISION 3100 West Lomita Boulevard, Torrance, California 90509, Tel (213) 534-2121

Printed in U.S.A. 7-74

HUGHES

HUGHES AIRCRAFT COMPANY

ELECTRON DYNAMICS DIVISION

767H

3 kW CW X-band TWT

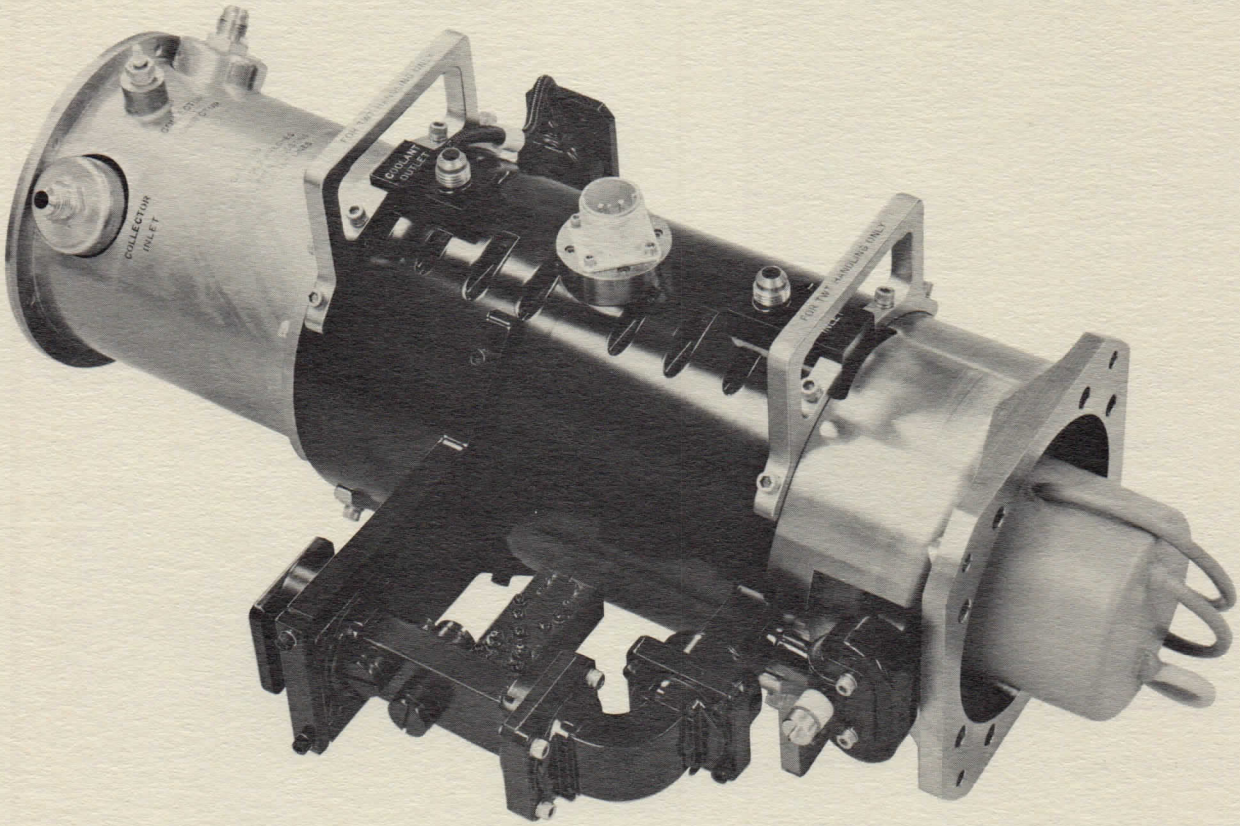

DESCRIPTION

The Hughes Model 767H traveling-wave tube is a solenoid focussed device capable of providing 3 kW of continuous RF power over the frequency range of 7.9 to 8.4 GHz. This tube has been specifically designed to achieve optimized performance for communications ground terminal transmitter applications.

The 767H employs an integral solenoid focussing coil which minimizes tube weight and solenoid power. This technique, perfected by the Hughes Aircraft Company, Electron Dynamics Division, allows the solenoid to be wrapped directly on to the tube body.

Minimum gain variations and improved phase linearity characteristics have been achieved by the use of special patented internal terminations*.

A modified version of this tube can be provided for applications requiring depressed collector operation.

*U.S. Patent Number 3,181,023

SPECIFICATIONS*

ELECTRICAL PARAMETERS	MINIMUM	TYPICAL	MAXIMUM
Beam Voltage	−12.5 kV	−13.0 kV	−13.7 kV
Beam Current	1.20 A	1.50 A	1.65 A
Body Current (RF)	—	50 mA	150 mA
Collector Voltage	0 V	0.0 kV	−6.0 kV
Collector Current	1.10 A	1.45 A	1.65 A
Anode Voltage	0 V	200 V	500 V
Anode Current	—	2 mA	10 mA
Heater Voltage	11.5 V	13.3 V	13.6 V
Heater Current	2.40 A	2.90 A	3.00 A
Solenoid Voltage	—	150 V	200 V
Solenoid Current	8.0 A	10.0 A	11.0 A
RF PARAMETERS			
Output Power	3.0 kW	3.6 kW	4.5 kW
Input Power	0.5 W	0.7 W	1.0 W
Saturated Gain	35 dB	37 dB	40 dB
Duty	—	CW	—
Frequency	7.9 GHz	—	8.4 GHz
Phase Sensitivity	—	0.2^{O}/V	0.25^{O}/V
Amplitude Sensitivity	—	0.008 dB/V	0.012 dB/V
MECHANICAL			
Collector Flow Rate: (deionized water)	—	5 GPM	—
Collector Pressure Drop (deionized water)	—	40 psi	—
Solenoid Flow Rate (deionized water)	—	2 gpm	—
Solenoid Pressure Drop (deionized water)	—	20 psi	—
Weight	—	68 lbs (30.85 kg)	75 lbs 34.02 kg)
WAVEGUIDE CONNECTIONS			
Input	—	UG-51/U	—
Output	—	CPR 112F	—

*All specifications are subject to change without prior notice.

PERFORMANCE CURVES

NOTE: The following curves illustrate typical performance but should not be used for design limits without contacting Hughes Electron Dynamics Division.

SATURATED OUTPUT POWER

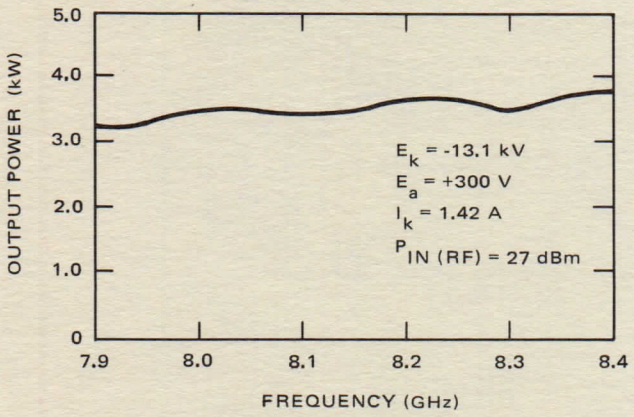

SMALL SIGNAL GAIN

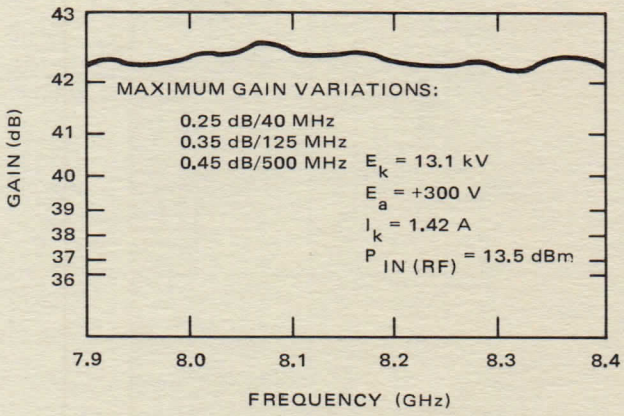

PHASE LINEARITY AT SMALL SIGNAL

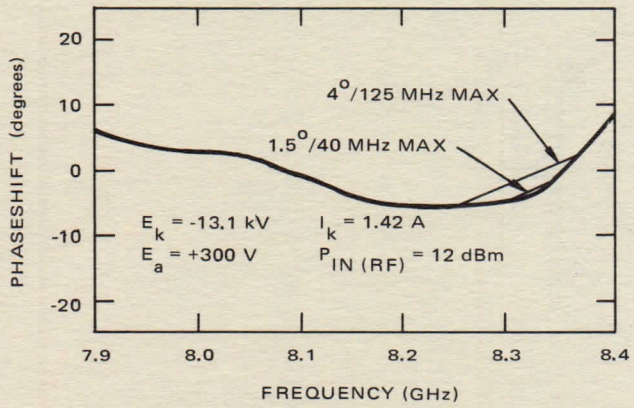

THIRD ORDER INTERMODULATION PRODUCTS VERSUS OUTPUT POWER

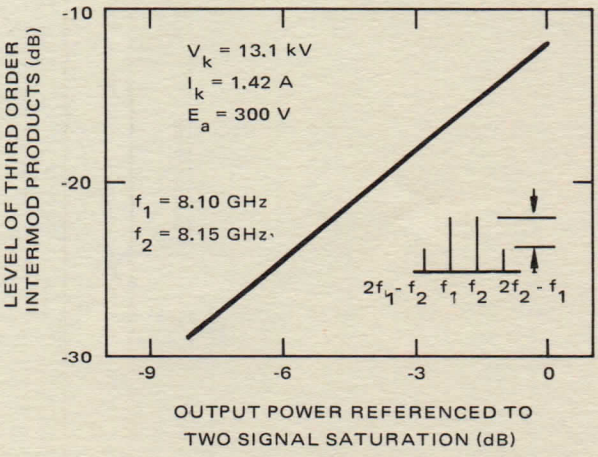

767H

3 kW CW X-band TWT

HUGHES

HUGHES AIRCRAFT COMPANY

ELECTRON DYNAMICS DIVISION

OUTLINE DRAWING

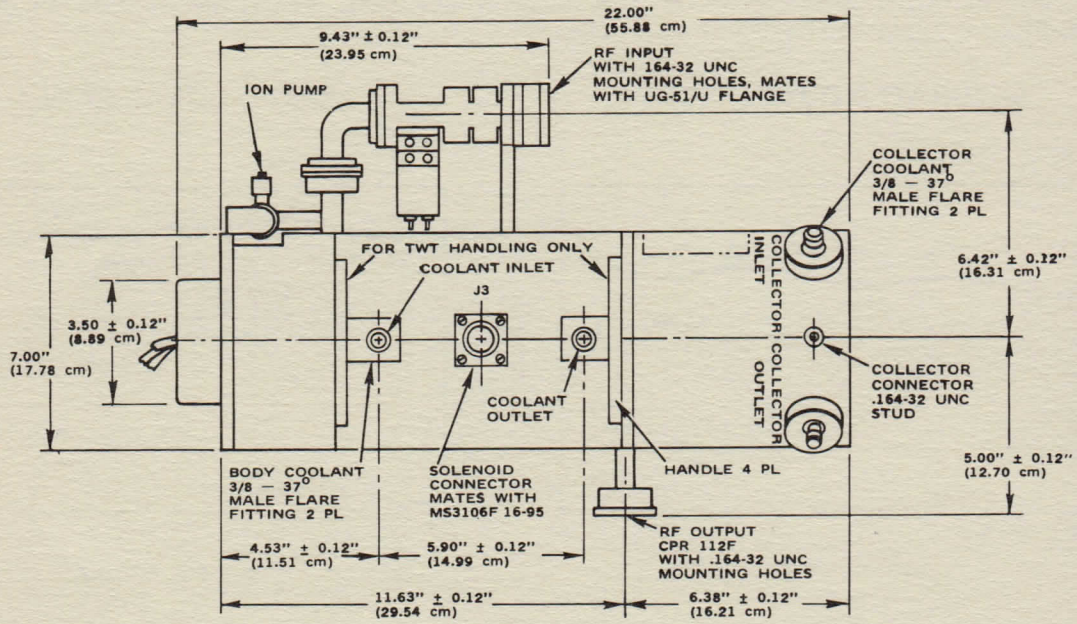

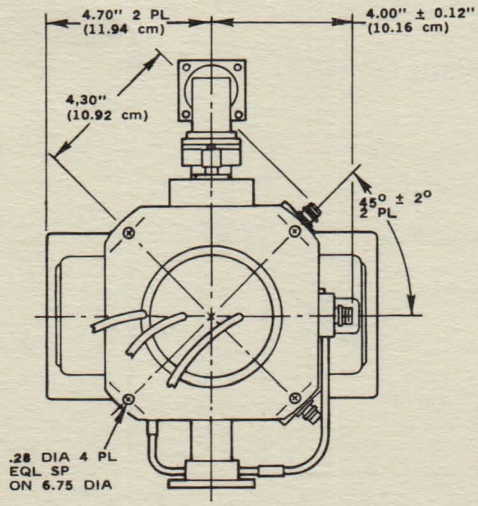

HUGHES

HUGHES AIRCRAFT COMPANY

ELECTRON DYNAMICS DIVISION

760H

X-Band Pulsed TWT

FEATURES

- 50 kW Peak Power
- Broadband
- Cathode Modulation
- High Gain
- High Efficiency
- PPM Focusing
- Liquid Cooling
- Environmentalized*

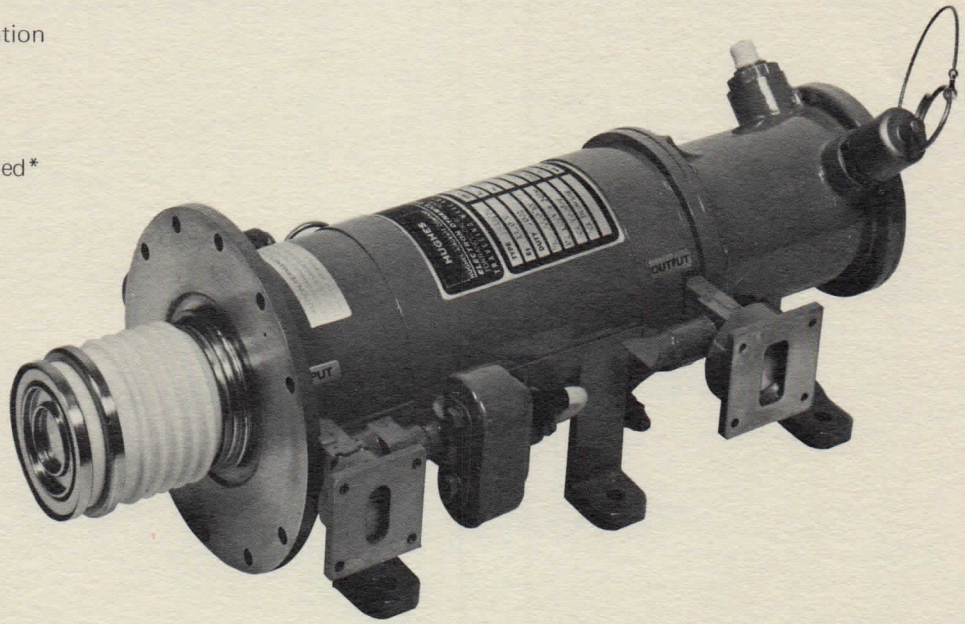

PERFORMANCE SPECIFICATIONS	MINIMUM	TYPICAL	MAXIMUM
Frequency	8.9 GHz	–	9.9 GHz
Output Power	50 kW	–	–
Saturated Gain	42 dB	44 dB	–
Duty	–	1%	2%
Depressed Efficiency	–	32%	–
ELECTRICAL PARAMETERS			
Cathode Voltage	–29.5 kV	–30.5 kV	–31.5 kV
Cathode Current	7.8 A	8.1 A	8.5 A
Body Voltage	–	Ground	–
Body Current (with RF)	–	1.6 A	2.0 A
Collector Voltage	0	–11.5 kV	–12.0 kV
Collector Current (with RF)	5.8 A	6.5 A	8.5 A
Heater Voltage (dc or ac)	10 V	11 V	12 V
Heater Current	2.0 A	2.9 A	4.0 A
Ion Pump Voltage	+3.0 kV	+3.3 kV	+3.6 kV
Ion Pump Current	–	<5μ A	1 mA
MECHANICAL SPECIFICATIONS			
Weight	–	22 pounds	–
Cooling:			
Coolant	–	FC-77 or Equivalent	–
Flow Rate	4 gal/min	–	–
Pressure Drop	–	–	40 psi

*Designed to meet requirements of MIL-E–5400 Class 2

760H

X-Band Pulsed TWT

HUGHES

HUGHES AIRCRAFT COMPANY

ELECTRON DYNAMICS DIVISION

TYPICAL PERFORMANCE CURVE

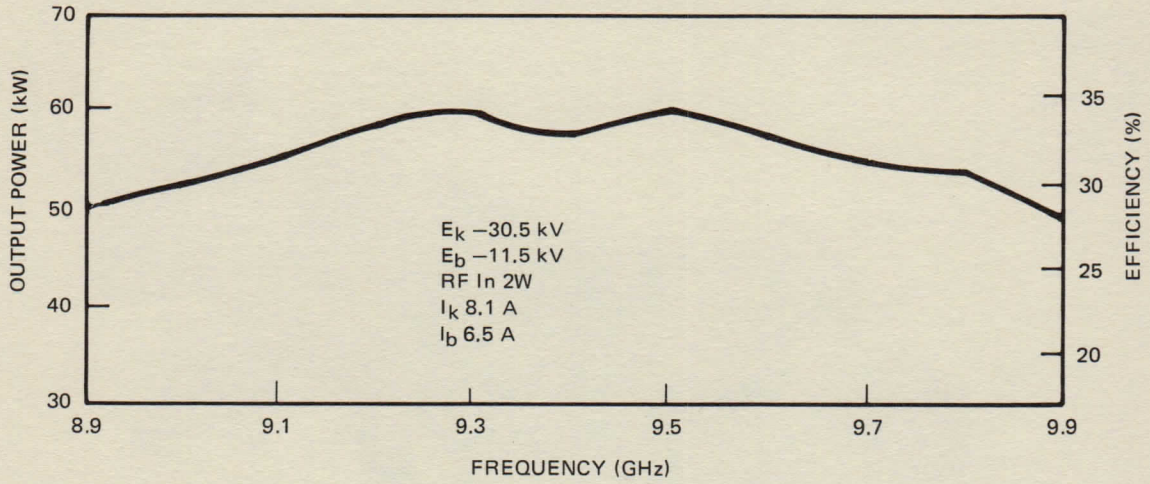

OUTLINE DRAWING

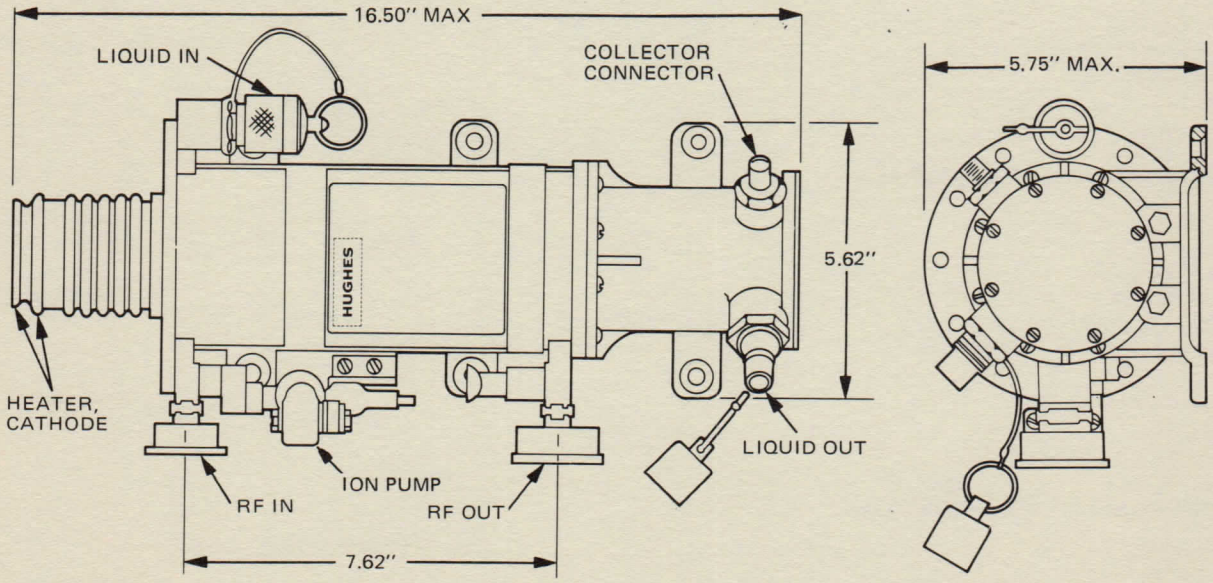

HUGHES
HUGHES AIRCRAFT COMPANY

ELECTRON DYNAMICS DIVISION / 3100 W. LOMITA BLVD. TORRANCE, CA. 90509 / TEL (213) 534-2121

Printed in U.S.A. 8-73

HUGHES

HUGHES AIRCRAFT COMPANY

ELECTRON DYNAMICS DIVISION

767H

3 KW CW X-BAND TWT

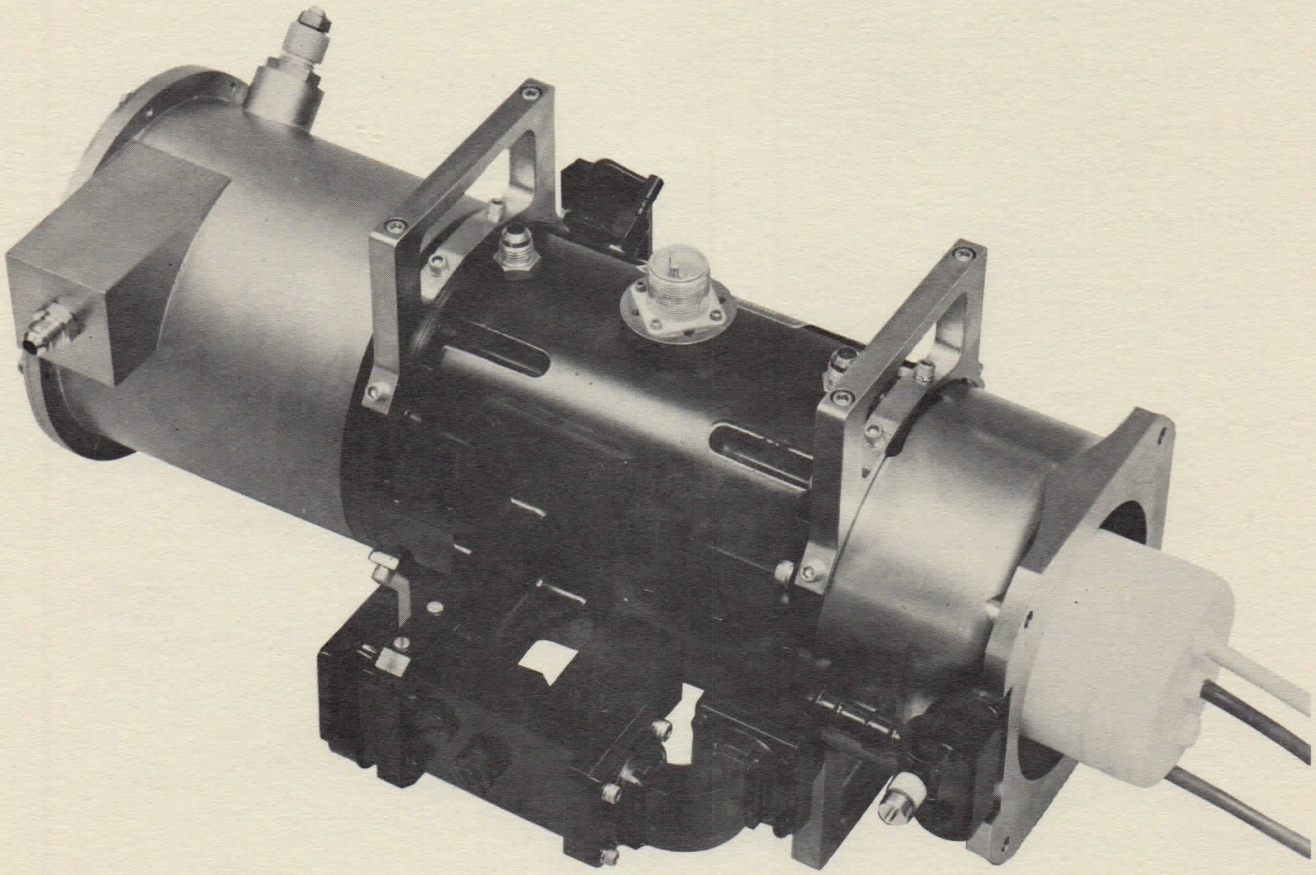

DESCRIPTION

The Hughes Model 767H traveling-wave tube is a solenoid focussed device capable of providing 3 kW of continuous RF power over the frequency range of 7.9 to 8.4 GHz. This tube has been specifically designed to achieve optimized performance for communications ground terminal transmitter applications.

The 767H employs an integral solenoid focussing coil which minimizes tube weight and solenoid power. This technique, perfected by the Hughes Aircraft Company, Electron Dynamics Division, allows the solenoid to be wrapped directly on to the tube body.

Minimum gain variations and improved phase linearity characteristics have been achieved by the use of special patented internal terminations*.

A modified version of this tube can be provided for applications requiring depressed collector operation.

* U. S. Patent Number 3,181,023

SPECIFICATIONS

ELECTRICAL PARAMETERS

	MINIMUM	TYPICAL	MAXIMUM
BEAM VOLTAGE	-12.5 kV	-13.0 kV	-13.5 kV
BEAM CURRENT	1.20 A	1.40 A	1.50 A
BODY CURRENT (RF)	--	50 mA	150 mA
COLLECTOR VOLTAGE	0 V	-5.0 kV	-6.0 kV
COLLECTOR CURRENT	1.10 A	1.35 A	1.50 A
ANODE VOLTAGE	0 V	200 V	500 V
ANODE CURRENT	--	2 mA	10 mA
HEATER VOLTAGE	11.5 V	12.0 V	12.5 V
HEATER CURRENT	2.40 A	2.75 A	3.00 A
SOLENOID VOLTAGE	70 V	112 V	150 V
SOLENOID CURRENT	6.0 A	8.65 A	11.0 A

RF PARAMETERS

OUTPUT POWER	3.0 kW	3.6 kW	4.5 kW
INPUT POWER	.5 W	1.0 W	1.5 W
SATURATED GAIN	35 dB	37 dB	40 dB
DUTY	--	CW	--
FREQUENCY	7.9 GHz	--	8.4 GHz
PHASE SENSITIVITY	--	.2°/V	--
AMPLITUDE SENSITIVITY	--	.008 dB/V	--

MECHANICAL

COLLECTOR FLOW RATES: (DEIONIZED WATER)	--	5 GPM	--
COLLECTOR PRESSURE DROPS (DEIONIZED WATER)	--	55 psi	--
SOLENOID FLOW RATES (DEIONIZED WATER)	--	2 GPM	--
SOLENOID PRESSURE DROPS (DEIONIZED WATER)	--	4 psi	--

WAVEGUIDE CONNECTIONS

INPUT	--	UG-51/U	--
OUTPUT	--	CPR 112F	--

PERFORMANCE CURVES

NOTE: The following curves illustrate typical performance but should not be used for design limits without contacting Hughes Electron Dynamics Division.

SATURATED OUTPUT POWER

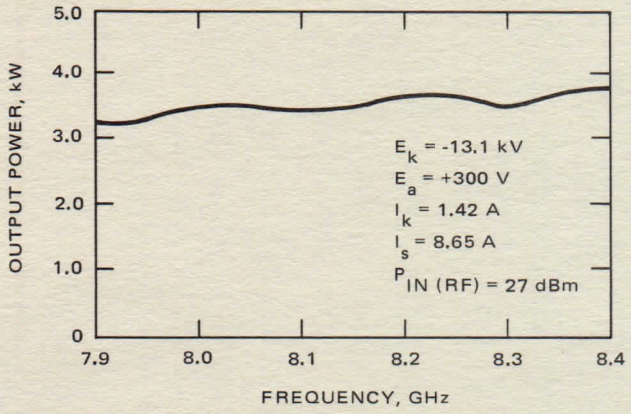

SMALL SIGNAL GAIN

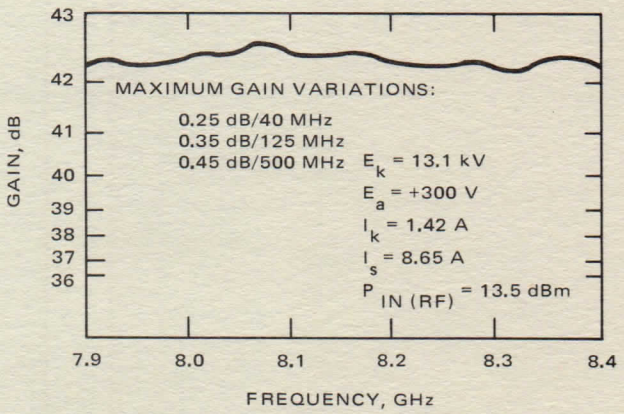

PHASE LINEARITY AT SMALL SIGNAL

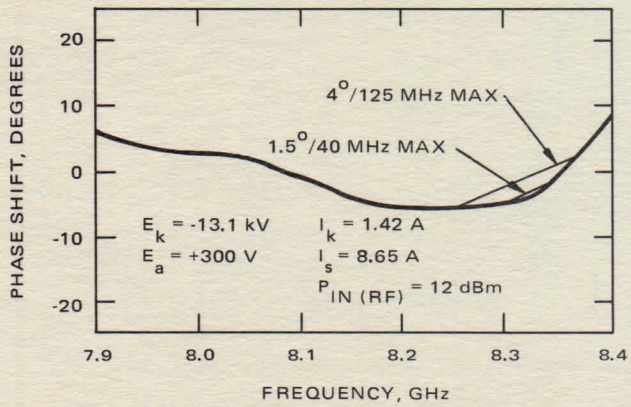

THIRD ORDER INTERMODULATION PRODUCTS VERSUS OUTPUT POWER

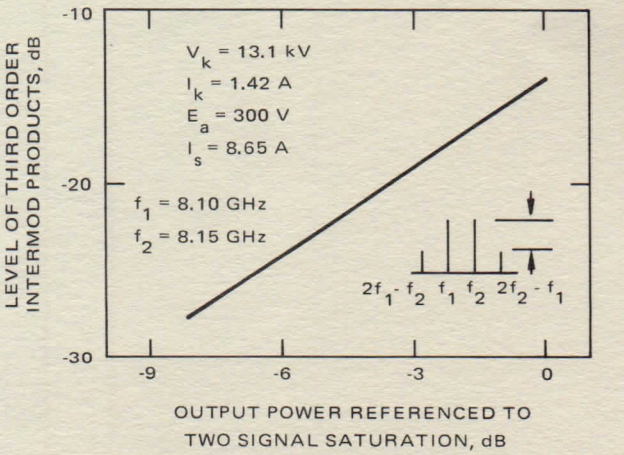

767H

3 KW CW X-BAND TWT

HUGHES

HUGHES AIRCRAFT COMPANY

ELECTRON DYNAMICS DIVISION

OUTLINE AND MOUNTING DRAWING

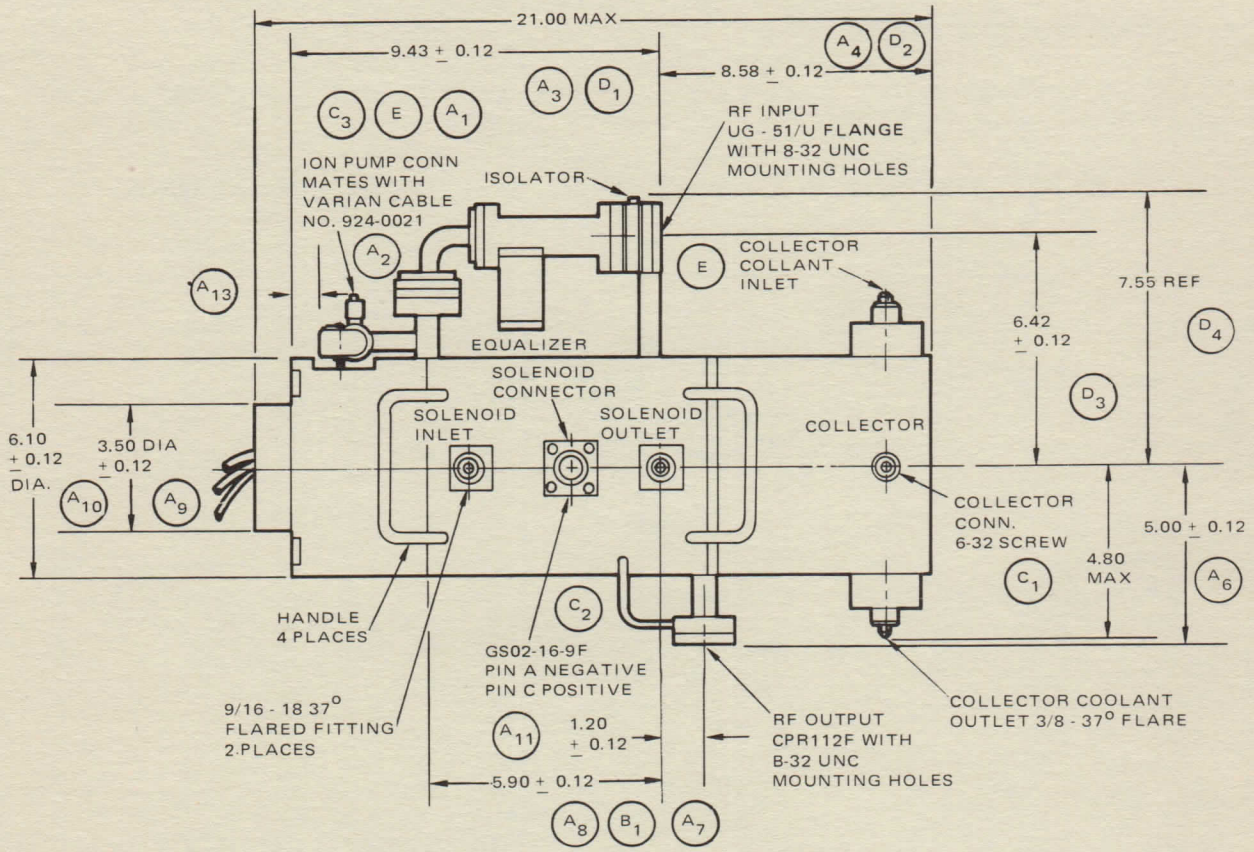

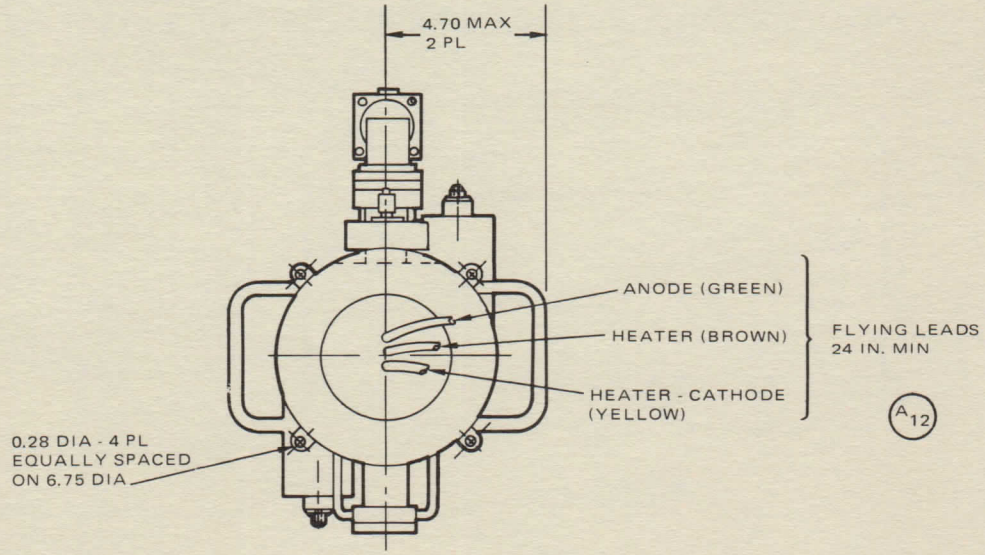

HUGHES
HUGHES AIRCRAFT COMPANY

ELECTRON DYNAMICS DIVISION / 3100 W. LOMITA BLVD. TORRANCE, CA. 90509 / TEL (213) 534-2121

Printed in U.S.A. 2-72

HUGHES

HUGHES AIRCRAFT COMPANY

ELECTRON DYNAMICS DIVISION

774H

1.5 kW, 8.0-16.0 GHz PULSED TWT

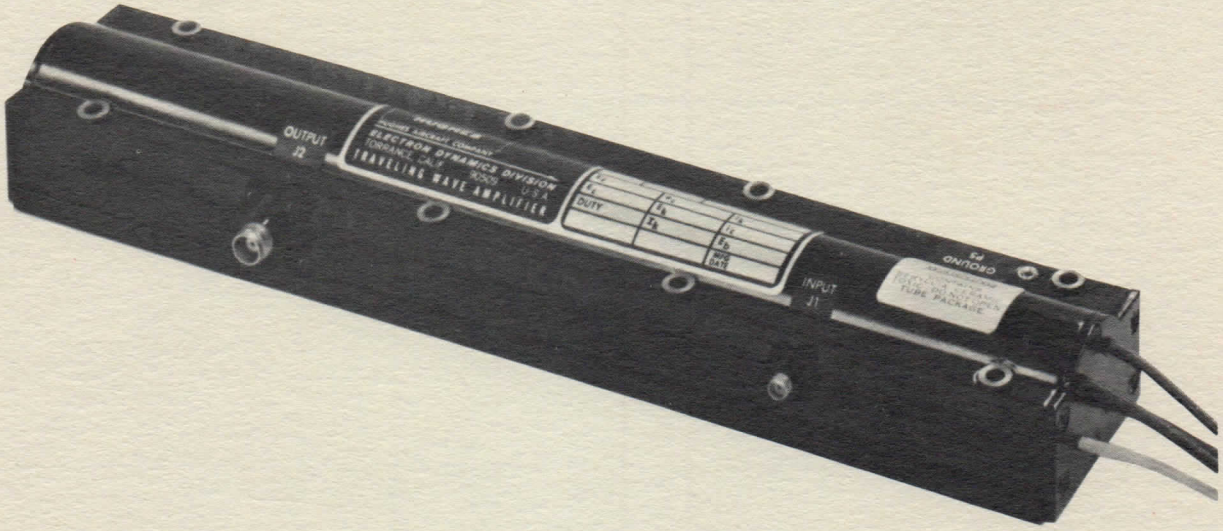

DESCRIPTION

The Hughes Model 774H is a high gain, grid controlled traveling-wave tube operating in the frequency range of 8.0 to 16.0 GHz. Using periodic permanent magnet focusing, its peak power output is greater than one kilowatt at up to 4% duty, utilizing conduction cooling.

NOTE: All voltages with respect to cathode

Its rugged construction, small size and light weight make it well suited for operation in airborne and missile environments. The tube is available in either grounded collector or depressed collector configurations.

SPECIFICATIONS*

FREQUENCY	8.0 - 16.0 GHz
POWER OUTPUT	1.5 kW nominal, 1.0 kW minimum at band edges
DUTY	4% nominal
LARGE SIGNAL GAIN (nominal)	50 dB
DYNAMIC DRIVE RANGE	5 dB
BEAM VOLTAGE	11.0 kV
BEAM CURRENT	1.7 A
GRID DRIVE	250 V
GRID BIAS	−150 V
HEATER VOLTAGE	6.3 V
HEATER CURRENT	<3.0 A
WEIGHT	4 pounds (1.8 kg)
LENGTH	14 inches (35.6 cm)
COOLING	conduction
RF INPUT CONNECTOR	SMA
RF OUTPUT CONNECTOR	TNC
ENVIRONMENT	MIL−E−5400, Class II

*All specifications are subject to change without prior notice.

774H

1.5 kW, 8.0-16.0 GHz PULSED TWT

HUGHES

HUGHES AIRCRAFT COMPANY

ELECTRON DYNAMICS DIVISION

TYPICAL PERFORMANCE CURVE

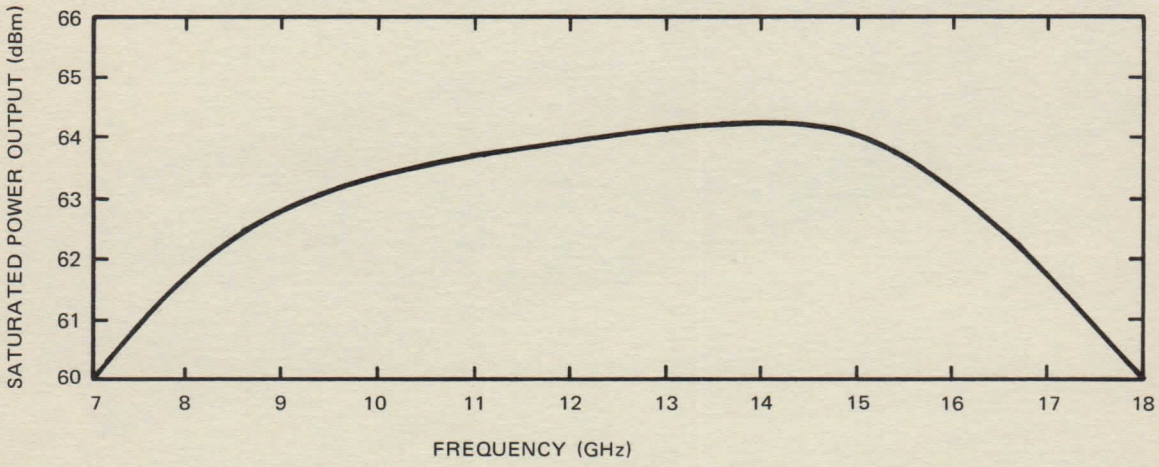

OUTLINE DRAWING

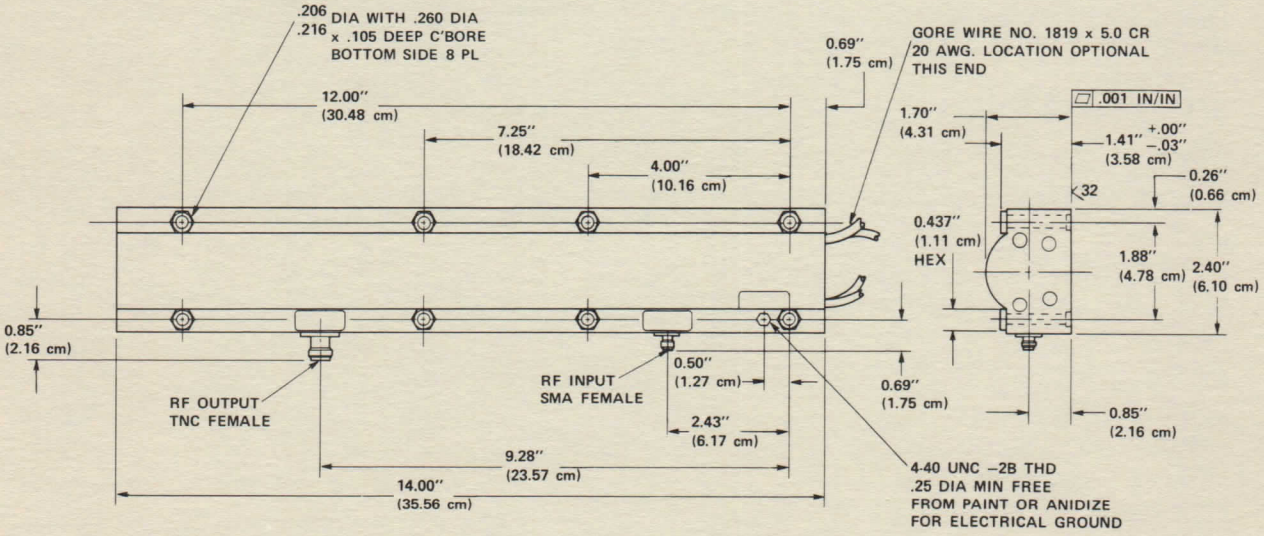

HUGHES ELECTRON DYNAMICS DIVISION MICROWAVE TRAVELING-WAVE TUBE PRODUCTS 3100 West Lomita Boulevard, Torrance, California 90509. Tel (213) 534-2121

HUGHES AIRCRAFT COMPANY

Printed in U.S.A. 9-75

HUGHES

HUGHES AIRCRAFT COMPANY

ELECTRON DYNAMICS DIVISION

781H

X-Band Pulsed TWT

FEATURES

- 2.5 kW Peak Power
- Broadband
- Shadow Grid Modulation
- High Gain
- High Duty
- High Efficiency
- Solenoid Focusing
- Liquid Cooling
- Environmentalized ①

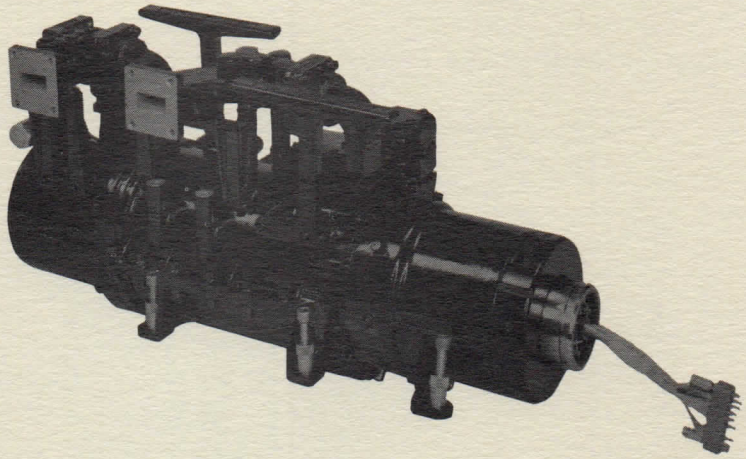

PERFORMANCE SPECIFICATIONS*	MINIMUM	TYPICAL	MAXIMUM
Bandwidth (mid X-band)	9.55	—	9.85
Output Power	2.5 kW	3 kW	4 kW
Saturated Gain	50 dB	53 dB	—
Duty	—	40%	—
Depressed Efficiency	—	27%	—
ELECTRICAL PARAMETERS			
Cathode Voltage	-11.8 kV	-12.0 kV	-12.2 kV
Cathode Current	1.1 A	1.2 A	1.3 A
Body Voltage	—	ground	—
Body Current (with RF)	—	0.1 A	0.2 A
Collector Voltage	-4 kV	-4.5 kV	-5 kV
Collector Current (with RF)	0.9 A	1.1 A	1.3 A
Heater Voltage (dc or ac)	10.1 V	11 V	11.3 V
Heater Current	3.3 A	3.5 A	3.7 A
Solenoid Voltage	130 V	150 V	170 V
Solenoid Current	7.0 A	8 A	9.5 A
Grid Drive	+180 V	+220 V	+260 V
Grid Bias	-210 V	-220 V	-230 V
Grid Current	—	5 mA	15 mA
Ion Pump Voltage	+3.0 kV	+3.5 kV	4.0 kV
Ion Pump Current	—	<5 μA	20 μA
MECHANICAL SPECIFICATIONS			
Weight	—	—	37 pounds (16.8 kg)
Cooling:			
Coolant Type	—	coolanol 25 or equivalent	—
Flow Rate	3 gal/min (.189 liters/sec)	—	—
Pressure Drop	13.5 psi (.949 kg/sq cm)	15 psi (1.05 kg/sq cm)	16.5 psi (1.16 kg/sq cm)

① Designed to meet MIL-E-5400 Class 2

*Specifications subject to change without prior notice.

781H

X-Band Pulsed TWT

HUGHES

HUGHES AIRCRAFT COMPANY

ELECTRON DYNAMICS DIVISION

TYPICAL PERFORMANCE CURVE

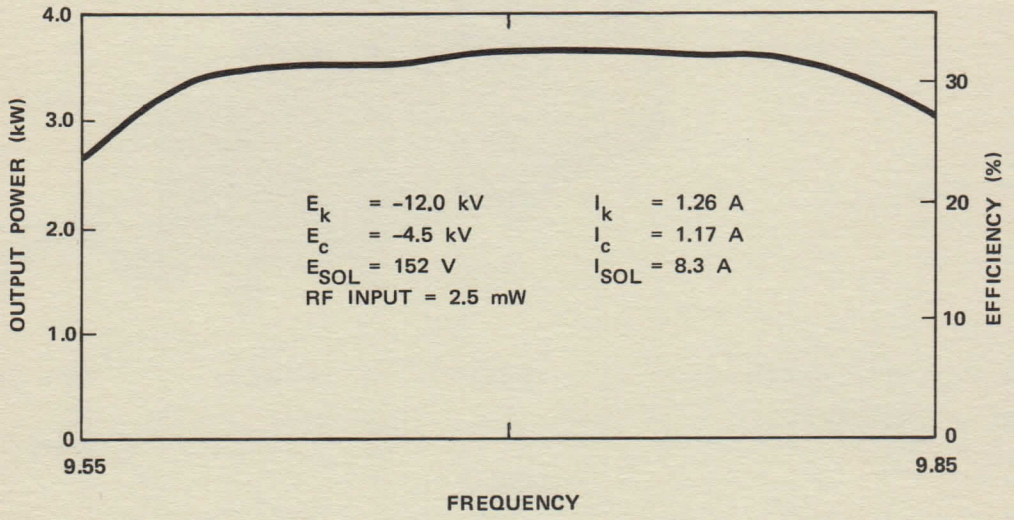

OUTLINE DRAWING

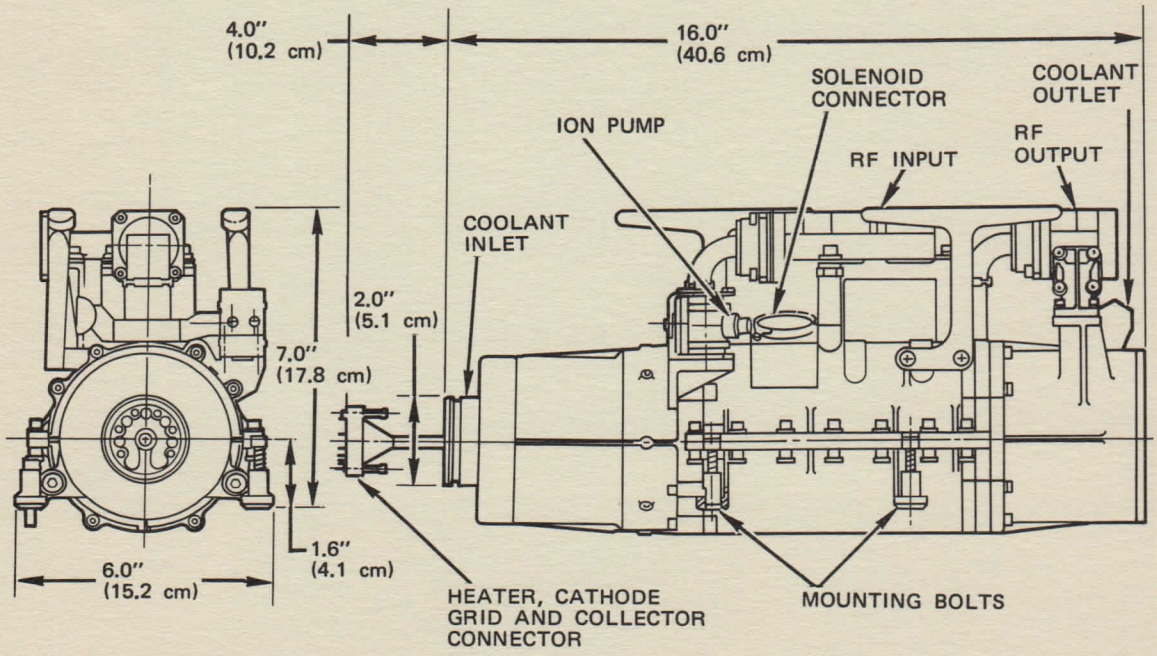

HUGHES ELECTRON DYNAMICS DIVISION 3100 West Lomita Boulevard, Torrance, California 90509, Tel (213) 534-2121

HUGHES AIRCRAFT COMPANY

Printed in USA 8/77

HUGHES

HUGHES AIRCRAFT COMPANY

ELECTRON DYNAMICS DIVISION

786H

X-Band Pulsed TWT

FEATURES

- 50 kW Peak Power
- Broadband
- Shadow Grid Modulation
- High Gain
- High Efficiency
- High Duty
- Solenoid Focusing
- Liquid Cooling
- Environmentalized*

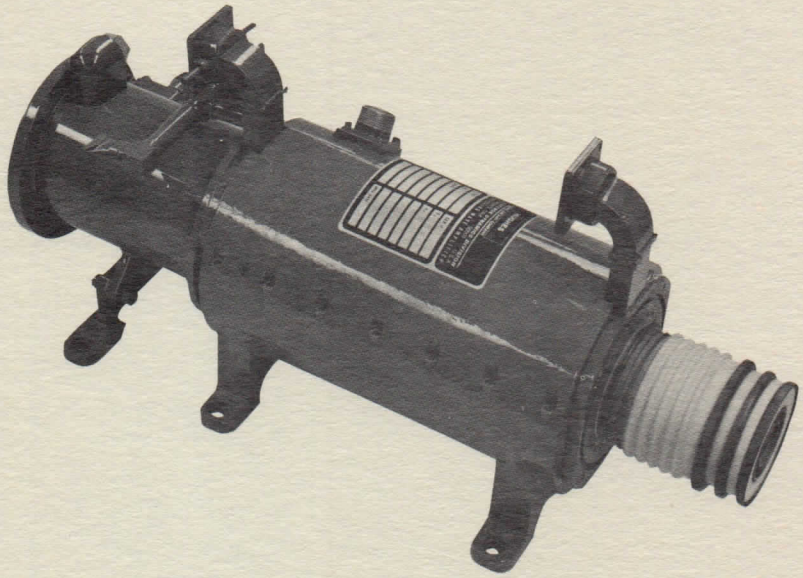

PERFORMANCE SPECIFICATIONS	MINIMUM	TYPICAL	MAXIMUM
Frequency	9.3 GHz	–	9.9 GHz
Output Power	50 kW	–	–
Saturated Gain	45 dB	47 dB	–
Duty	–	10%	12%
Depressed Efficiency	–	30%	–
ELECTRICAL PARAMETERS			
Cathode Voltage	-32 kV	-33.5 kV	-35 kV
Cathode Current	7.8 A	8.6 A	9.2 A
Body Voltage	–	ground	–
Body Current (with RF)	–	0.5 A	1.0 A
Collector Voltage	ground	-13.5 kV	-14 kV
Collector Current (with RF)	7.0 A	8.1 A	9.2 A
Heater Voltage (dc or ac)	10 V	11 V	12 V
Heater Current	2.5 A	3.4 A	4.5 A
Solenoid Voltage	80 V	90 V	100 V
Solenoid Current	15 A	17 A	20 A
Grid Drive	+400V	+465 V	+550 V
Grid Bias	-450 V	-500 V	-550 V
Grid Current	–	45 mA	80 mA
Ion Pump Voltage	+3.0 kV	+3.3 kV	+3.6 kV
Ion Pump Current	–	<5μA	1 mA
MECHANICAL SPECIFICATIONS			
Weight	–	45 pounds	–
Cooling:			
Coolant Type	–	FC77 or equivalent	–
Flow Rate	4 gal/min	–	–
Pressure Drop	–	–	25 psi

*Designed to meet MIL-E-5400 Class 2

786H

X-Band Pulsed TWT

HUGHES

HUGHES AIRCRAFT COMPANY

ELECTRON DYNAMICS DIVISION

TYPICAL PERFORMANCE CURVE

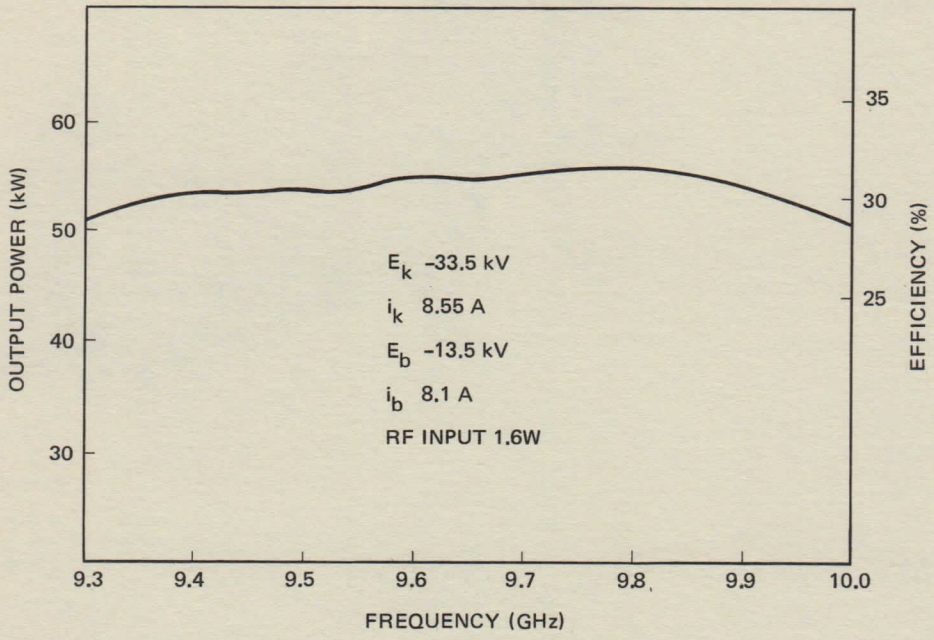

OUTLINE DRAWING

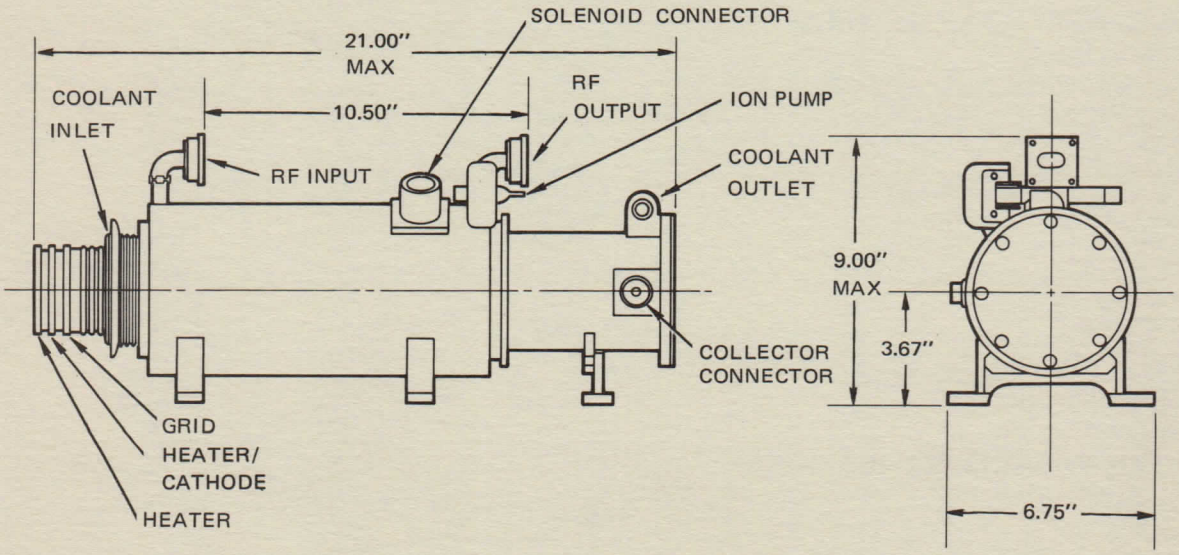

YOUR LOCAL REPRESENTATIVE

HUGHES
HUGHES AIRCRAFT COMPANY

ELECTRON DYNAMICS DIVISION / 3100 W. LOMITA BLVD. TORRANCE, CA. 90509 / TEL (213) 534-2121

Printed in U.S.A. 9–73

HUGHES

HUGHES AIRCRAFT COMPANY

ELECTRON DYNAMICS DIVISION

792H

5 kW CW X-band TWT

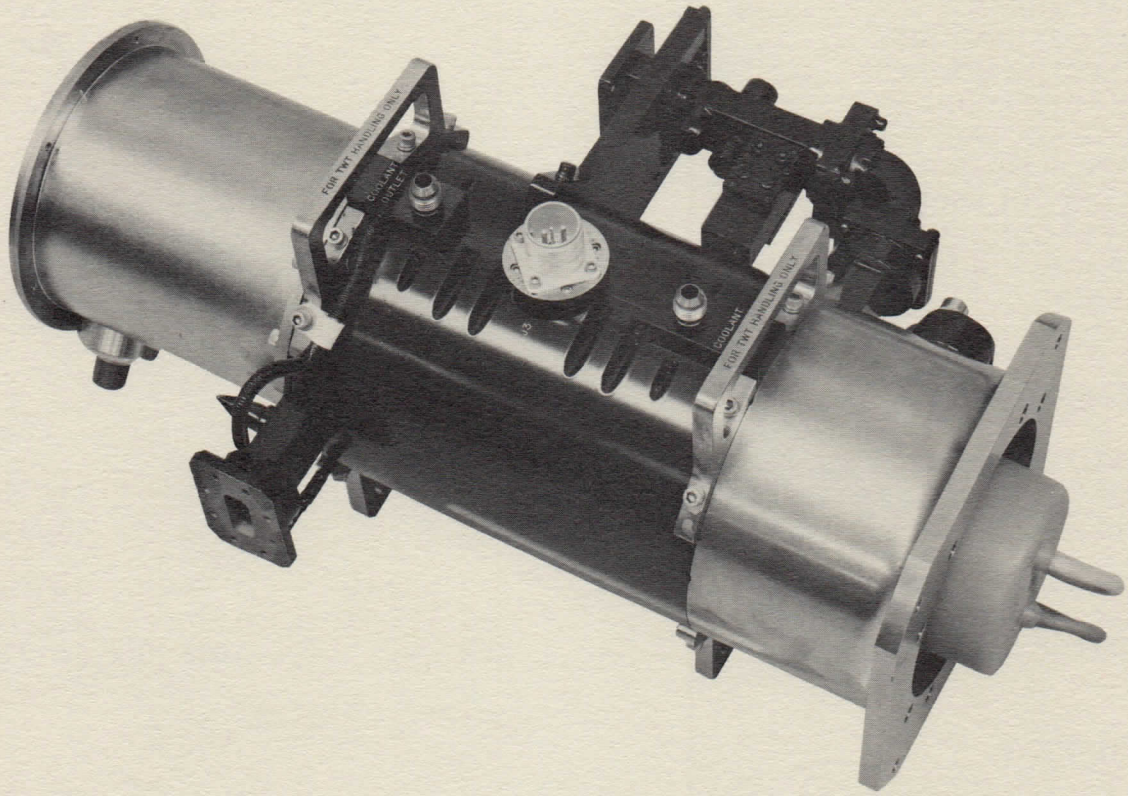

DESCRIPTION

The Hughes Model 792H traveling-wave tube is a solenoid focussed device capable of providing 5 kW of continuous RF power over the frequency range of 7.9 to 8.4 GHz. This tube has been specifically designed to achieve optimized performance for communications ground terminal transmitter applications.

The 792H employs an integral solenoid focussing coil which minimizes tube weight and solenoid power. This technique, perfected by the Hughes Aircraft Company, Electron Dynamics Division, allows the solenoid to be wrapped directly onto the tube body.

Minimum gain variations and improved phase linearity characteristics have been achieved by the use of special patented internal terminations.*

A modified version of this tube can be provided for applications requiring depressed collector operation.

*U.S. Patent Number 3,181,023

SPECIFICATIONS *

ELECTRICAL PARAMETERS	MINIMUM	TYPICAL	MAXIMUM
BEAM VOLTAGE	−12.5 kV	−13.4 kV	−13.7 kV
BEAM CURRENT	−	2.0 A	2.2 A
BODY CURRENT (RF)	−	50 mA	100 mA
COLLECTOR VOLTAGE	0 V	0 V	−6.0 kV
COLLECTOR CURRENT	−	2.0 A	2.2 A
ANODE VOLTAGE	0 V	300 V	500 V
ANODE CURRENT	−	2 mA	15 mA
HEATER VOLTAGE	11.0 V	13.4 V	13.5 V
HEATER CURRENT	2.40 A	2.9 A	3.00 A
SOLENOID VOLTAGE	−	185 V	193 V
SOLENOID CURRENT	7.0 A	10.0 V	11.0 A
RF PARAMETERS			
OUTPUT POWER	5.0 kW	5.4 kW	−
INPUT POWER	0.5 W	1.1 W	1.58 W
SATURATED GAIN	35 dB	37 dB	40 dB
DUTY	−	CW	−
FREQUENCY	7.9 GHz	−	8.4 GHz
PHASE SENSITIVITY	−	0.2°/V	0.25°/V
AMPLITUDE SENSITIVITY	−	0.008 dB/V	0.012 dB/V
MECHANICAL			
COLLECTOR FLOW RATE: (DEIONIZED WATER).	−	6 GPM	−
COLLECTOR PRESSURE DROP (DEIONIZED WATER)	−	50 psi	−
SOLENOID FLOW RATE (DEIONIZED WATER)	−	2 GPM	−
SOLENOID PRESSURE DROP (DEIONIZED WATER)	−	20 psi	−
WEIGHT	−	68 lbs. (30.58 kg)	75 lbs. (34.02 kg)
WAVEGUIDE CONNECTIONS			
INPUT	−	UG-51/U	−
OUTPUT	−	CPR 112F	−

*All specifications are subject to change without prior notice.

PERFORMANCE CURVES

NOTE: The following curves illustrate typical performance but should not be used for design limits without contacting Hughes Electron Dynamics Division.

SATURATED OUTPUT POWER

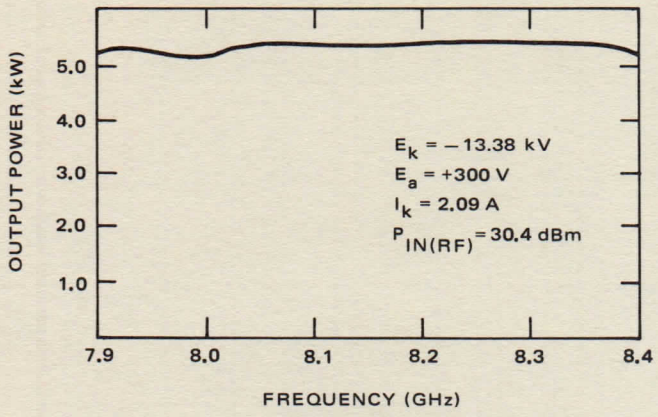

SMALL SIGNAL GAIN

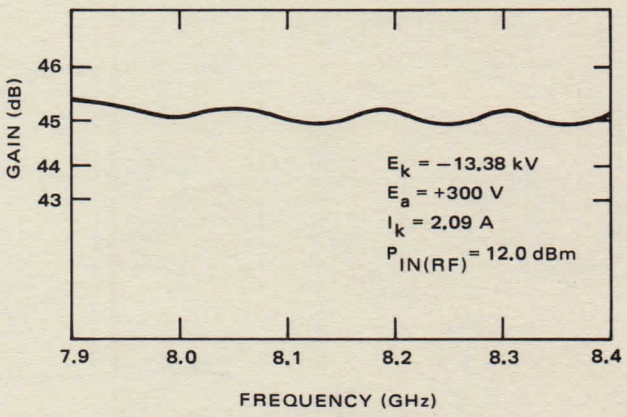

PHASE LINEARITY

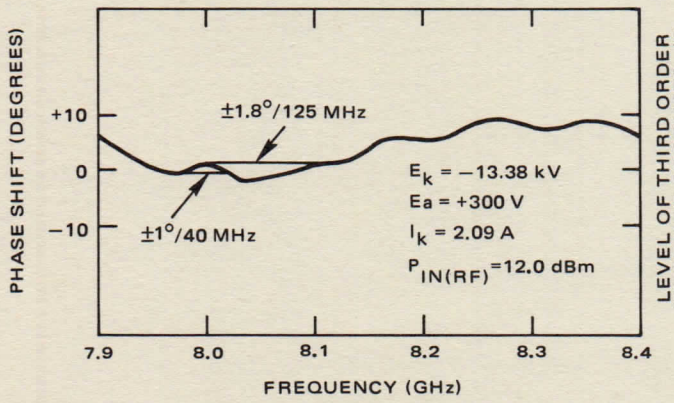

THIRD ORDER INTERMODULATION PRODUCTS VERSUS OUTPUT POWER

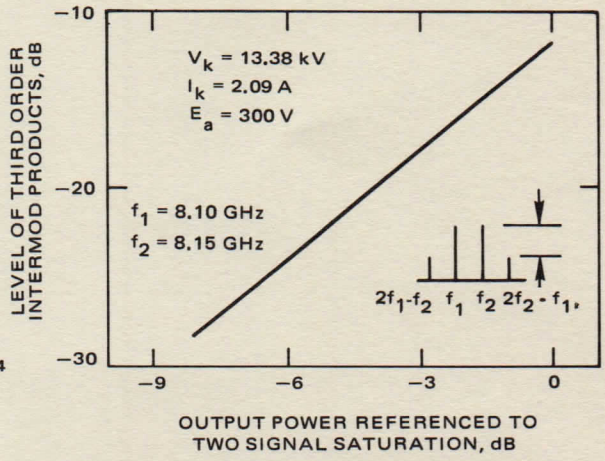

792H

5 kW CW X-band TWT

HUGHES

HUGHES AIRCRAFT COMPANY

ELECTRON DYNAMICS DIVISION

OUTLINE DRAWING

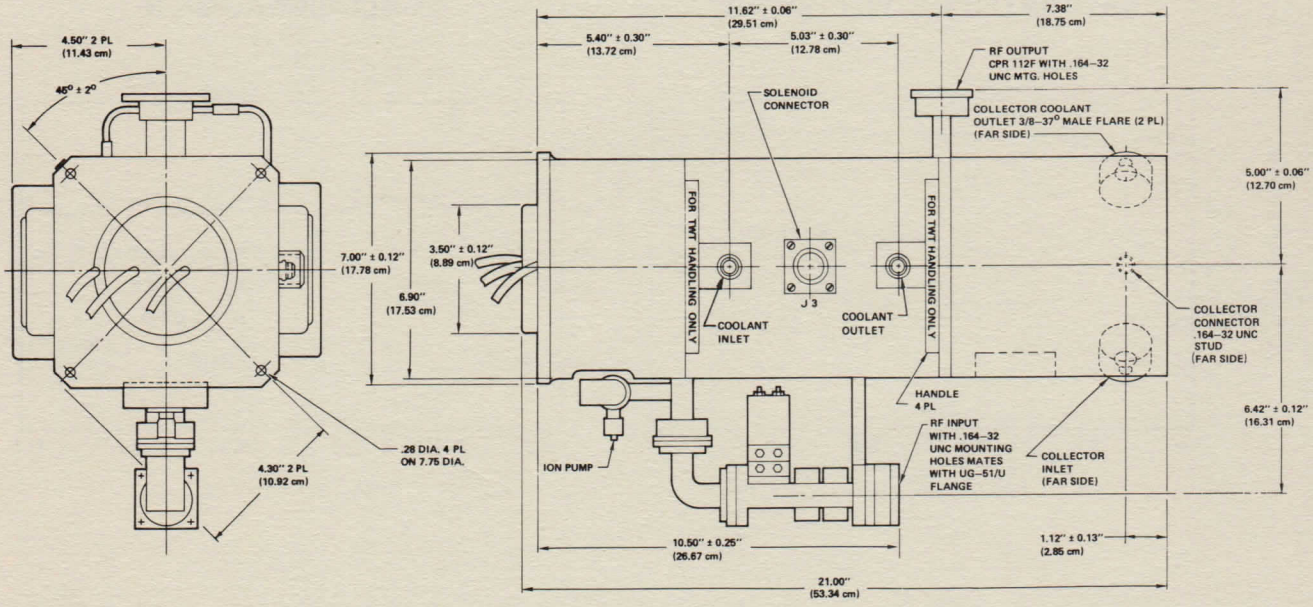

HUGHES ELECTRON DYNAMICS DIVISION MICROWAVE TRAVELING-WAVE TUBE PRODUCTS 3100 West Lomita Boulevard, Torrance, California 90509, Tel (213) 534-2121

HUGHES AIRCRAFT COMPANY

Printed in U.S.A. 7-75

HUGHES

HUGHES AIRCRAFT COMPANY

ELECTRON DYNAMICS DIVISION

796H

X-Band Pulsed TWT

FEATURES

- 40 kW Peak Power
- Broadband
- High Gain
- High Duty
- High Efficiency
- Shadow Grid Modulation
- PPM Focusing
- Liquid Cooling
- Environmentalized*

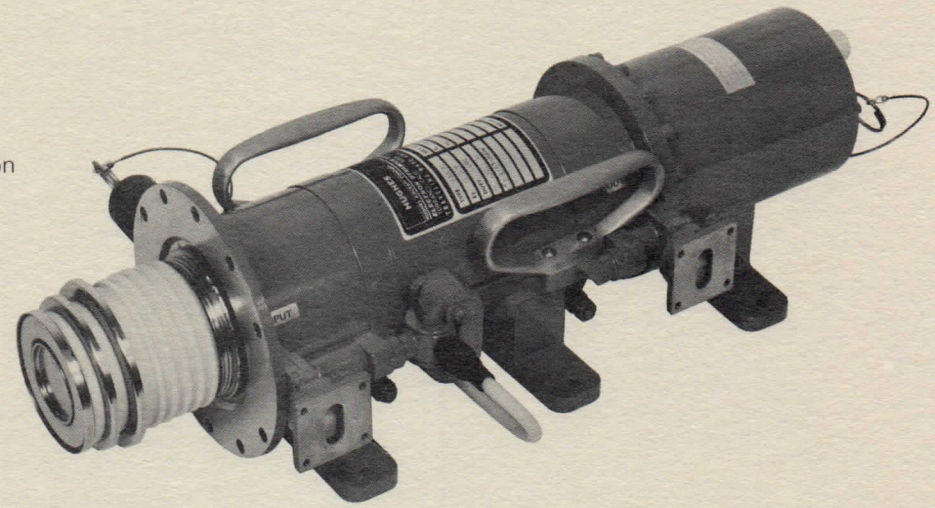

PERFORMANCE SPECIFICATIONS	MINIMUM	TYPICAL	MAXIMUM
Frequency	9.2 GHz	–	9.9 GHz
Output Power	40 kW	45 kW	–
Saturated Gain	52 dB	54 dB	–
Duty	–	4%	5%
Depressed Efficiency	–	30%	–
ELECTRICAL PARAMETERS			
Cathode Voltage	–30 kV	–31 kV	–32 kV
Cathode Current	6 A	7 A	8 A
Body Voltage	–	Ground	–
Body Current (with RF)	–	1 A	1.5 A
Collector Voltage	–5.0 kV	–13.5 kV	–14.5 kV
Collector Current (with RF)	4.5 A	6 A	8 A
Heater Voltage (dc or ac)	9.5 V	10.5 V	11.5 V
Heater Current	2.5 A	3.4 A	4.5 A
Grid Drive	+325 V	+400 V	+475 V
Grid Bias	–425 V	–475 V	–525 V
Grid Current	–	25 mA	75 mA
Ion Pump Voltage	3.0 kV	3.3 kV	3.6 kV
Ion Pump Current	–	$<5\mu A$	1 mA
MECHANICAL SPECIFICATIONS			
Weight	–	28 pounds	–
Cooling:			
Coolant Type	–	FC77 or Equivalent	–
Collector Flow Rate	5.5 gal/min	–	–
Collector Pressure Drop	–	–	30 psi
Body Flow Rate	3.5 gal/min	–	–
Body Pressure Drop	–	–	50 psi

*Designed to meet MIL-E-5400 Class 2

796H

X-Band Pulsed TWT

HUGHES

HUGHES AIRCRAFT COMPANY

ELECTRON DYNAMICS DIVISION

TYPICAL PERFORMANCE CURVE

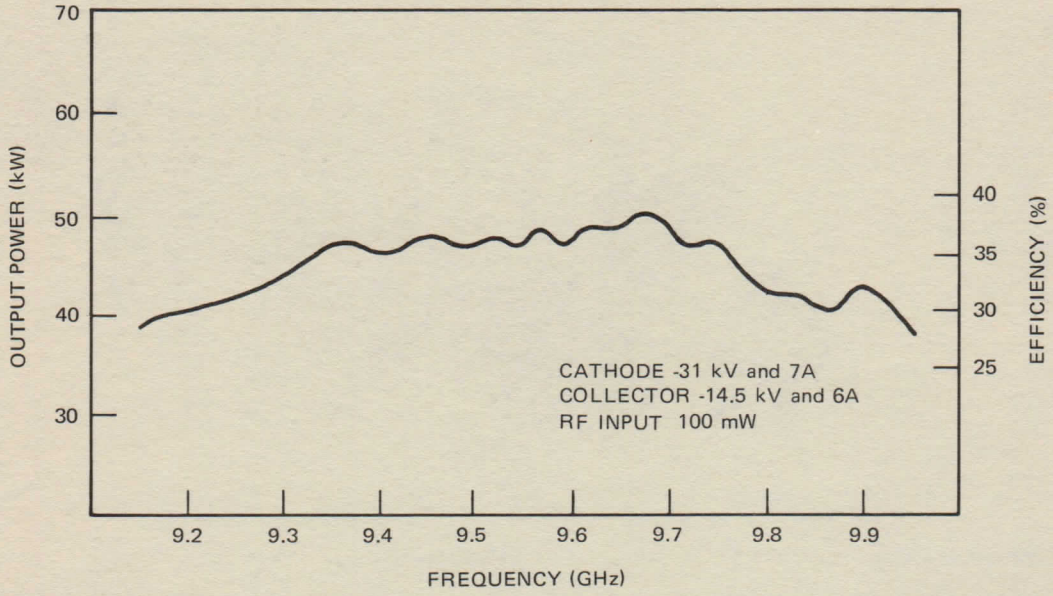

OUTLINE DRAWING

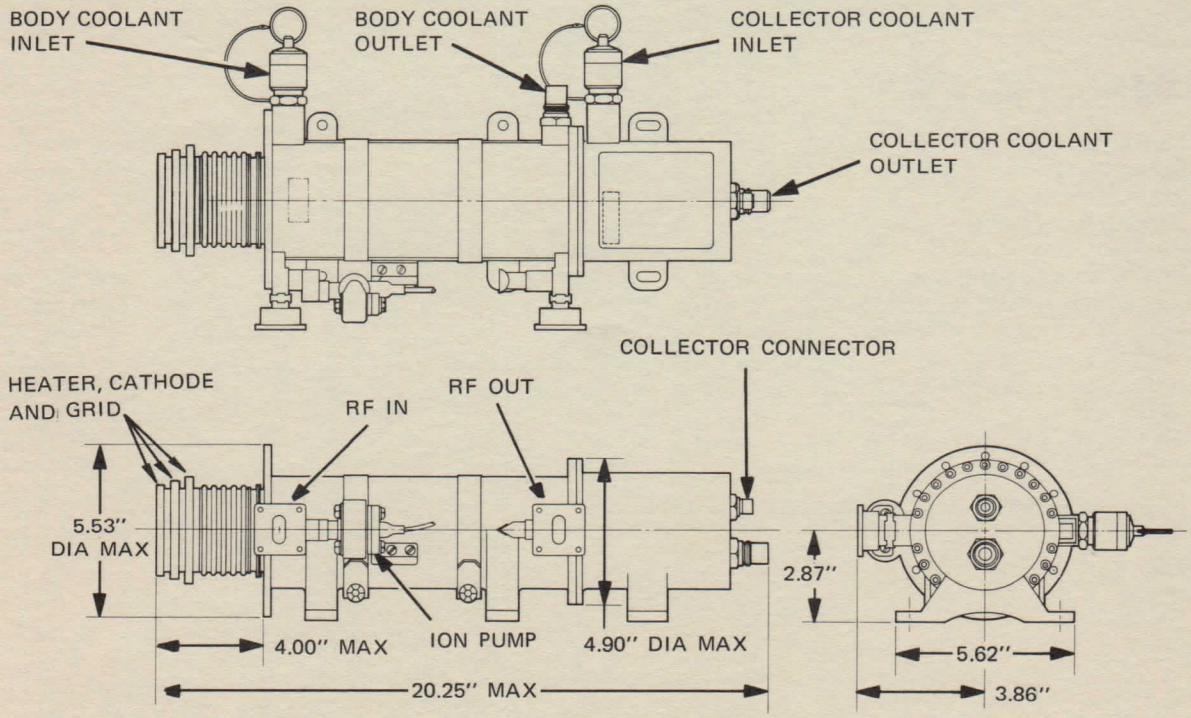

HUGHES ELECTRON DYNAMICS DIVISION / 3100 W. LOMITA BLVD. TORRANCE, CA. 90509 / TEL (213) 534-2121

HUGHES AIRCRAFT COMPANY

Printed in U.S.A. – 8-73

HUGHES

HUGHES AIRCRAFT COMPANY

ELECTRON DYNAMICS DIVISION

820H

Ku-Band Pulsed TWT

FEATURES

- 5 kW Peak Power
- Broadband
- Grid Modulation
- High Gain
- PPM Focusing
- Liquid Cooling
- Lightweight
- Environmentalized*

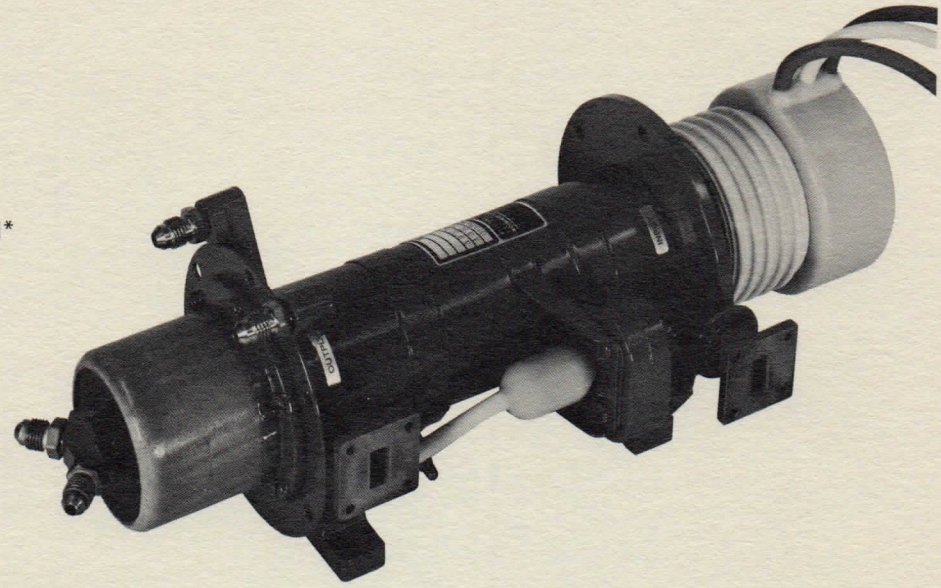

PERFORMANCE SPECIFICATIONS	MINIMUM	TYPICAL	MAXIMUM
Frequency	16.0 GHz	–	17.0 GHz
Output Power	5 kW	5.1 kW	–
Saturated Gain	40 dB	45 dB	50 dB
Duty	–	1%	1.2%
ELECTRICAL PARAMETERS			
Cathode Voltage	–20 kV	–23 kV	–24 kV
Cathode Current	1.3 A	1.5 A	1.7 A
Body Voltage	–	Ground	–
Body Current (with RF)	0.1 A	0.25 A	0.4 A
Collector Voltage	–	0	–7 kV**
Collector Current (with RF)	0.9 A	1.25 A	1.6 A
Heater Voltage (dc or ac)	9 V	10 V	11 V
Heater Current	2.5 A	3.0 A	4.0 A
Grid Drive	+100 V	+150 V	+200 V
Grid Bias	–300 V	–400 V	–600 V
Grid Current	75 mA	150 mA	250 mA
Ion Pump Voltage	3.0 kV	3.3 kV	3.6 kV
Ion Pump Current	–	$< 5 \mu$ A	1 mA
MECHANICAL SPECIFICATIONS			
Weight	–	15 pounds	16 pounds
Cooling:			
Coolant Type	–	Any liquid	–
Collector Flow Rate	0.75 gal/min	–	–
Collector Pressure Drop	–	–	6 psi
Body Flow Rate	0.25 gal/min	–	–
Body Pressure Drop	–	–	4 psi

*Designed to meet MIL-E-5400 Class 2

**Model 820H is capable of operating in depressed mode

820H

Ku-Band Pulsed TWT

HUGHES

HUGHES AIRCRAFT COMPANY

ELECTRON DYNAMICS DIVISION

TYPICAL PERFORMANCE CURVE

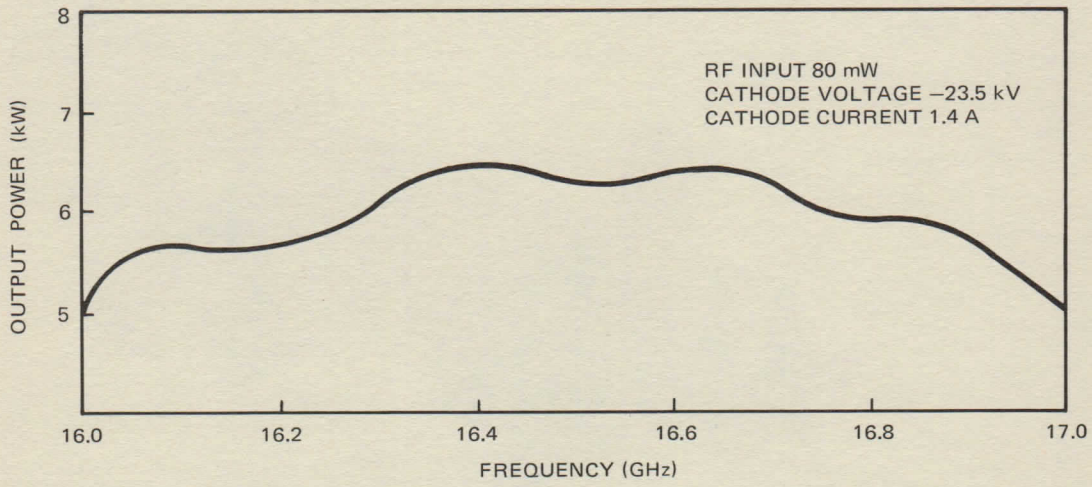

OUTLINE DRAWING

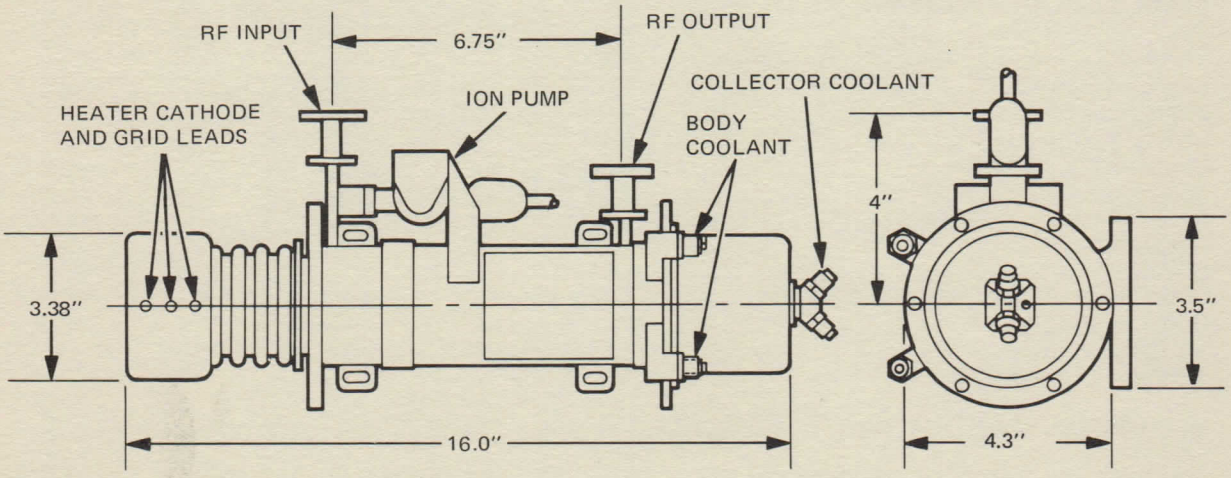

HUGHES
HUGHES AIRCRAFT COMPANY
ELECTRON DYNAMICS DIVISION / 3100 W. LOMITA BLVD. TORRANCE, CA. 90509 / TEL (213) 534-2121

Printed in U.S.A. – 8-73

HUGHES

HUGHES AIRCRAFT COMPANY

ELECTRON DYNAMICS DIVISION

830H

Ku-Band Pulsed TWT

FEATURES

- 3 kW Peak Power
- Broadband
- Grid Modulation
- High Gain
- PPM Focusing
- Liquid Cooling
- Lightweight
- Environmentalized*

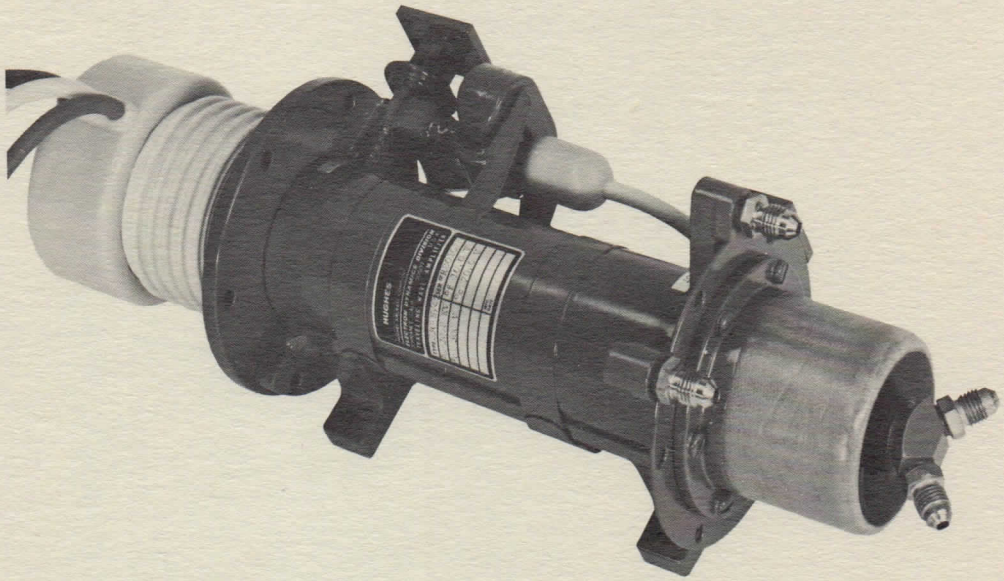

PERFORMANCE SPECIFICATIONS	MINIMUM	TYPICAL	MAXIMUM
Frequency	16.2 GHz	–	16.7 GHz
Output Power	3 kW	3.5 kW	–
Saturated Gain	37 dB	40 dB	46 dB
Duty	–	4%	4.5%
ELECTRICAL PARAMETERS			
Cathode Voltage	–20 kV	–21 kV	–24 kV
Cathode Current	1.0 A	1.2 A	1.5 A
Body Voltage	–	Ground	–
Body Current (with RF)	0.08 A	0.15 A	0.20 A
Collector Voltage	–	0	–7 kV**
Collector Current (with RF)	0.8 A	1.05 A	1.3 A
Heater Voltage (dc or ac)	9 V	10 V	11 V
Heater Current	2.5 A	3.0 A	4.0 A
Grid Drive	+70 V	+100 V	+130 V
Grid Bias	–300 V	–400 V	–600 V
Grid Current	75 mA	120 mA	200 mA
Ion Pump Voltage	3.0 kV	3.3 kV	3.6 kV
Ion Pump Current	–	<5μA	1 mA
MECHANICAL SPECIFICATIONS			
Weight	–	14 pounds	–
Cooling:			
Coolant Type	–	Any liquid	–
Collector Flow Rate	2 gal/min	–	–
Collector Pressure Drop	–	–	30 psi
Body Flow Rate	0.5 gal/min	–	–
Body Pressure Drop	–	–	10 psi

*Designed to meet MIL-E-5400 Class 2

**Model 830H is capable of operating in depressed mode

830H

Ku-Band Pulsed TWT

HUGHES

HUGHES AIRCRAFT COMPANY

ELECTRON DYNAMICS DIVISION

TYPICAL PERFORMANCE CURVE

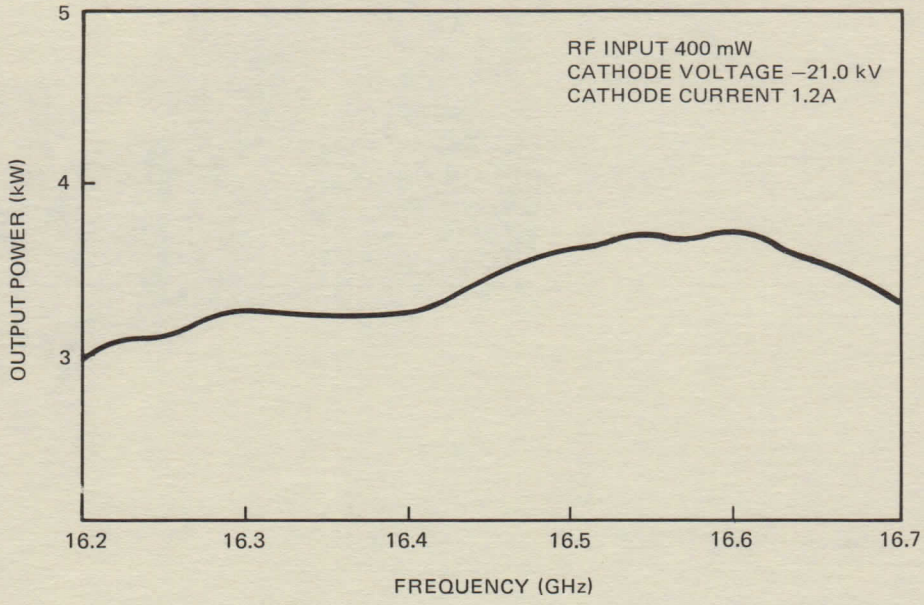

OUTLINE DRAWING

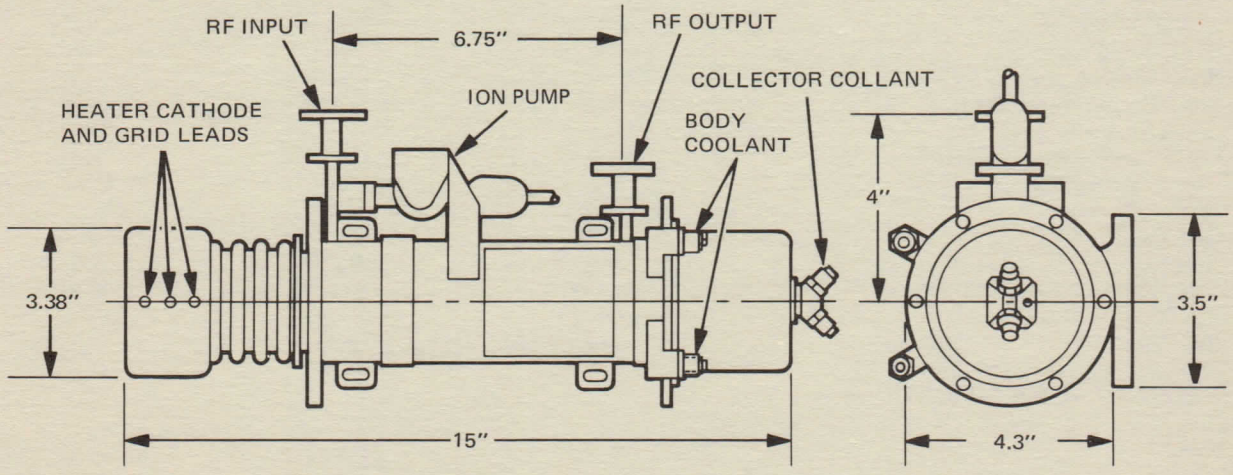

HUGHES ELECTRON DYNAMICS DIVISION / 3100 W. LOMITA BLVD. TORRANCE, CA. 90509 / TEL (213) 534-2121

HUGHES AIRCRAFT COMPANY

Printed in U.S.A. – 8-73

HUGHES

HUGHES AIRCRAFT COMPANY

ELECTRON DYNAMICS DIVISION

835H SERIES

Ku-Band Pulsed TWT

FEATURES

- 150 kW Peak Power
- Broadband
- Shadow Grid Modulation
- High Gain
- High Efficiency
- PPM Focusing
- Liquid Cooling
- Environmentalized*

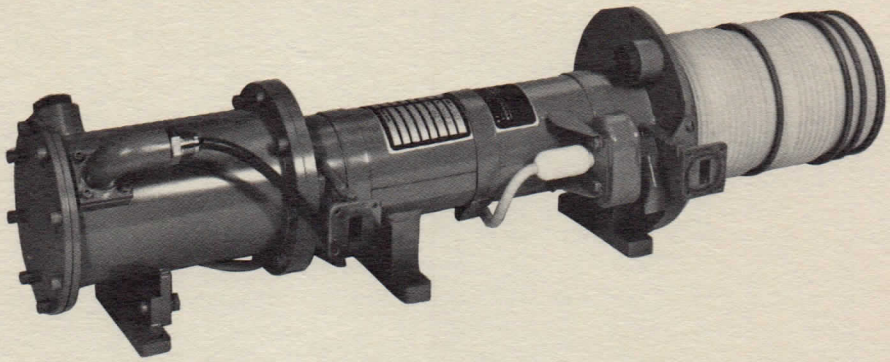

PERFORMANCE SPECIFICATIONS	MINIMUM	TYPICAL	MAXIMUM
Frequency	15.9 GHz	–	16.4 GHz
Output Power	150 kW	185 kW	–
Saturated Gain	46 dB	48 dB	53 dB
Duty	–	0.75%	1%
Depressed Efficiency	25%	27%	30%
ELECTRICAL PARAMETERS			
Cathode Voltage	–78 kV	–82 kV	–85 kV
Cathode Current	10 A	12 A	13 A
Body Voltage	–	Ground	–
Body Current (with RF)	1 A	2 A	2.5 A
Collector Voltage	–25 kV	–30 kV	–33 kV
Collector Current (with RF)	7.5 A	10 A	12 A
Anode Voltage	–40 kV	–50 kV	–55 kV
Anode Current	–	20 mA	50 mA
Heater Voltage (dc or ac)	8.0 V	9.0 V	10.5 V
Heater Current	4.5 A	5 A	5.5 A
Grid Drive	400 V	650 V	800 V
Grid Bias	–500 V	–700 V	–800 V
Grid Current	–	25 mA	50 mA
Ion Pump Voltage	3.0 kV	3.3 kV	3.6 kV
Ion Pump Current	–	<5 μA	1 mA
MECHANICAL SPECIFICATIONS			
Weight	–	30 pounds	31 pounds
Cooling:			
Coolant	–	FC-75 or Equivalent	–
Flow Rate	6 gal/min	–	–
Pressure Drop	–	–	70 psi

*Designed to meet MIL-E-5400 Class 2

835H SERIES

Ku-Band Pulsed TWT

HUGHES

HUGHES AIRCRAFT COMPANY

ELECTRON DYNAMICS DIVISION

TYPICAL PERFORMANCE CURVE

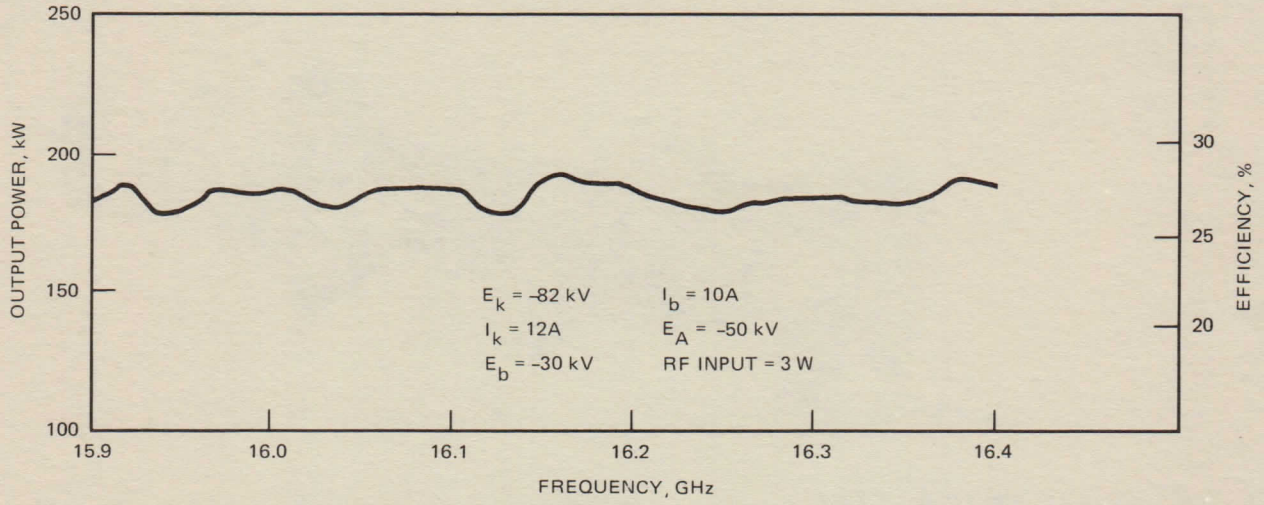

OUTLINE DRAWING

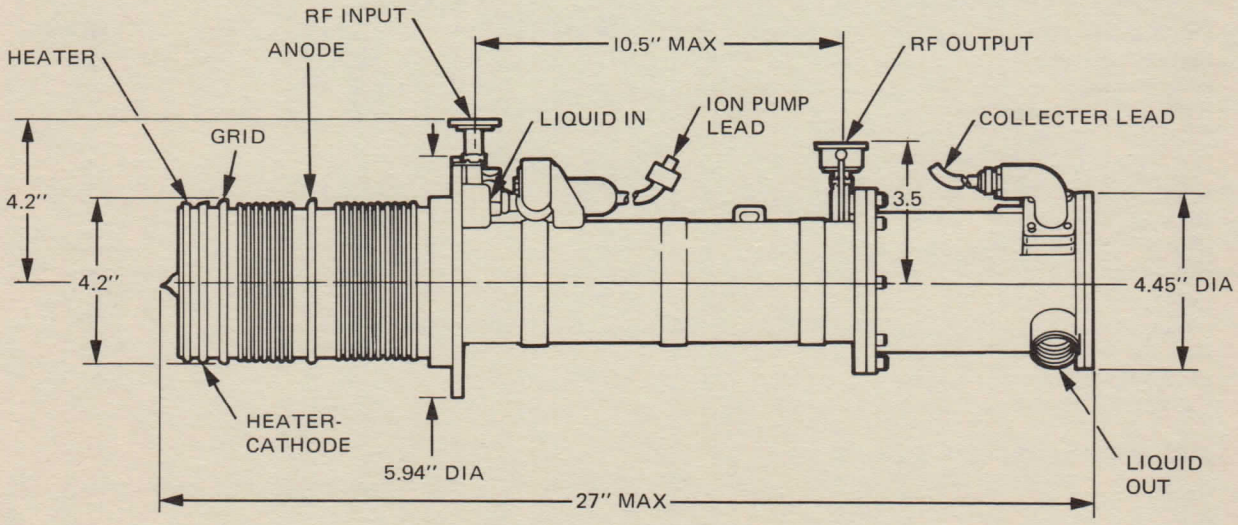

HUGHES
HUGHES AIRCRAFT COMPANY
ELECTRON DYNAMICS DIVISION 3100 West Lomita Boulevard, Torrance, California 90509, Tel (213) 534-2121

Printed in U.S.A.–9–73

HUGHES

ELECTRON DYNAMICS DIVISION

837H

1.2W 10-15 GHz CW TWT

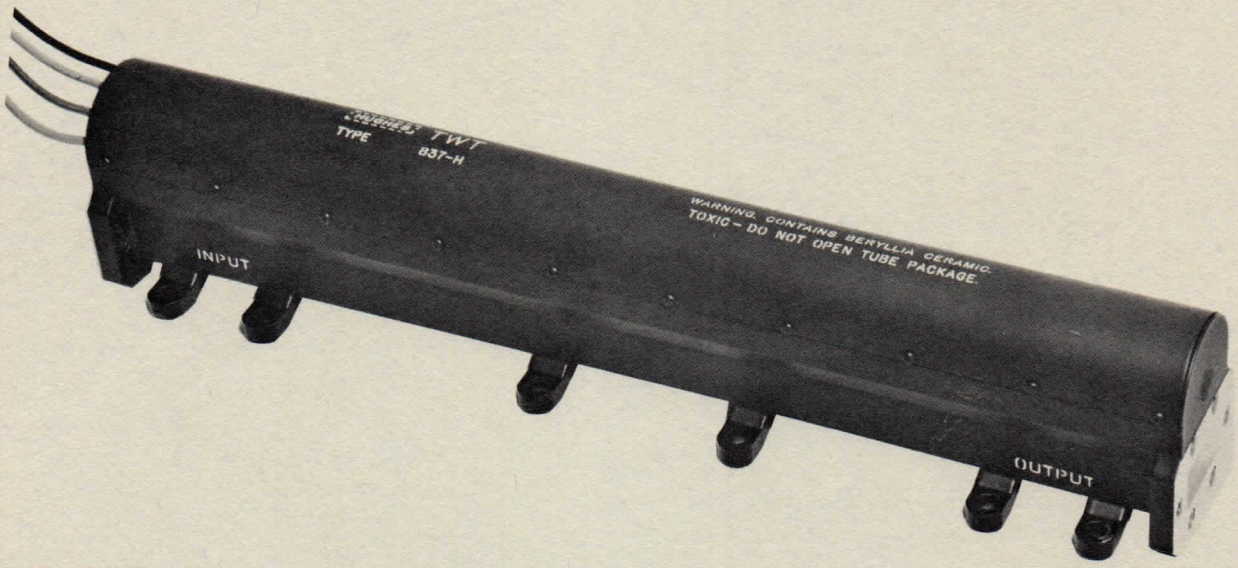

DESCRIPTION

The 837H is a long-life space qualified traveling-wave tube which features high gain and low group delay distortion.

SPECIFICATIONS

Frequency	10 - 15 GHz
Power Output	1.2 W
Duty	CW
Gain (Saturation)	45 dB
Efficiency	19%
Beam Voltage	1860 V
Beam Current	9 mA
Anode Voltage	250 V
Anode Current	0.02 mA
Heater Voltage	3.8 V
Heater Current	0.26 A
Construction	Metal Ceramic
Cooling	Conduction
Focusing	PPM
Connectors	WR-75 Waveguide
Weight	18 Ounces
Length	9.375 Inches
Expected Life	>50,000 Hours

837H

1.2W 10-15 GHz CW TWT

HUGHES

ELECTRON DYNAMICS DIVISION

PERFORMANCE CURVE

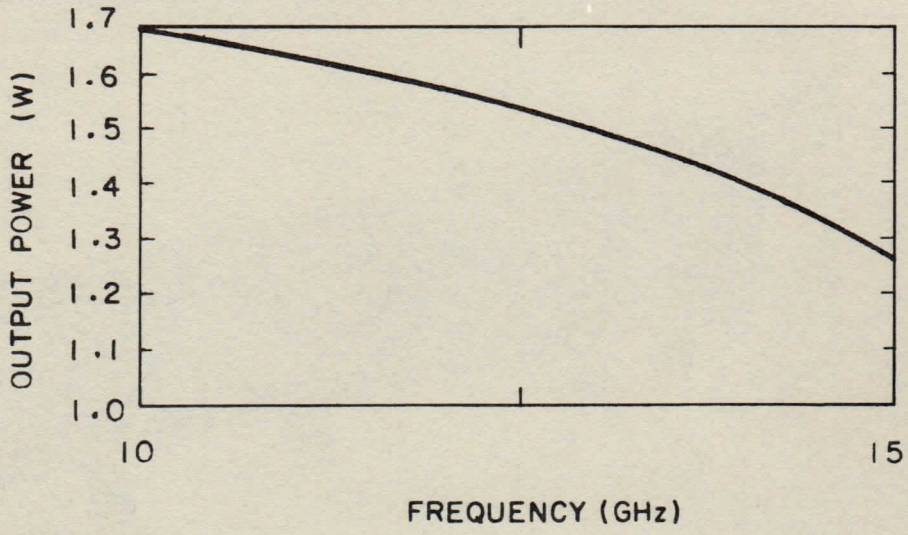

OUTLINE AND MOUNTING DRAWING

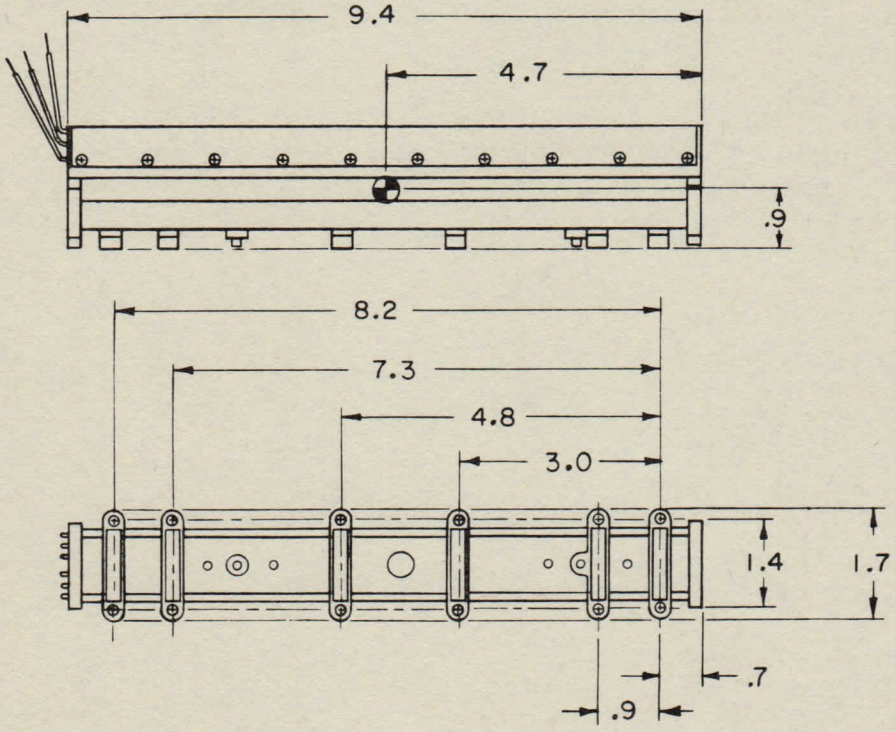

These data are typical values. Operating instructions and electrical characteristics can be obtained upon request.

YOUR LOCAL REPRESENTATIVE

HUGHES
HUGHES AIRCRAFT COMPANY

ELECTRON DYNAMICS DIVISION / 3100 W. LOMITA BLVD. TORRANCE, CA. 90509 / TEL (213) 534-2121

Printed in U.S.A.—11—71

HUGHES

HUGHES AIRCRAFT COMPANY

ELECTRON DYNAMICS DIVISION

837HA

1.0W 12.0-16.0 GHz CW TWT

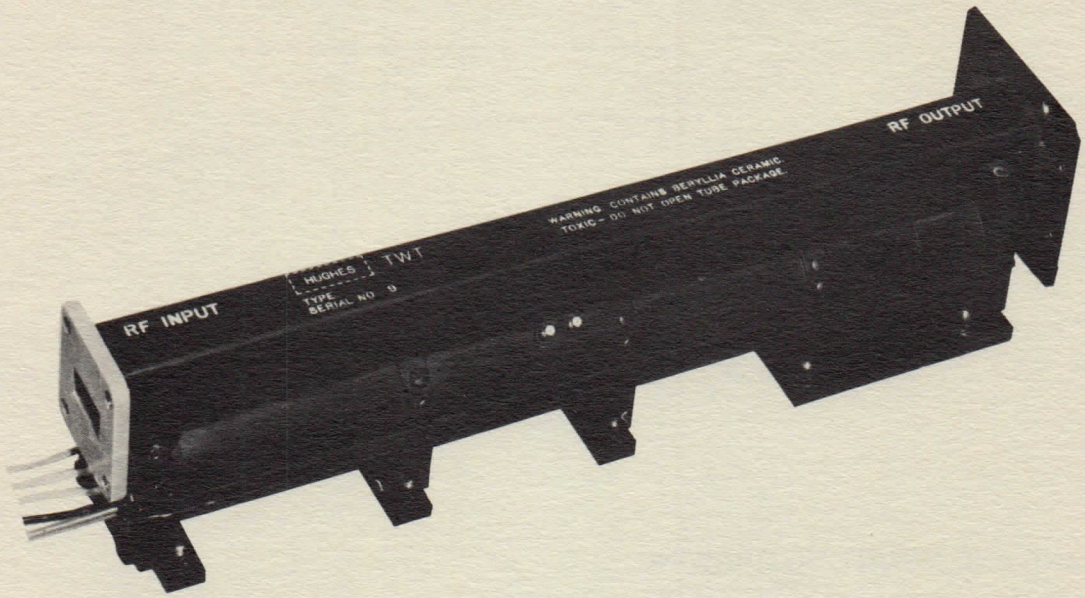

DESCRIPTION

The Hughes model 837HA is a long-life space-qualified traveling-wave tube developed for the Skylab Program. This tube will be used as a driver for a passive microwave and radar system to study the earth from space.

SPECIFICATIONS

Frequency	12.0-16.0 GHz
Power Output	1 W
Duty	CW
Gain (saturation)	45 dB
Efficiency	19%
Beam Voltage	1840 V
Beam Current	9 mA
Anode Voltage	250 V
Anode Current	.01 mA
Heater Voltage	3.8 V
Heater Current	.260 mA
Construction	Metal/Ceramic
Cooling	Conduction
Focusing	PPM
Weight	22 ounces
Length	10.0 inches
Connectors (mates with)	UG 419/U
Expected Life	10 years

837HA

1.0W 12.0-16.0 GHz CW TWT

HUGHES

HUGHES AIRCRAFT COMPANY

ELECTRON DYNAMICS DIVISION

PERFORMANCE CURVE

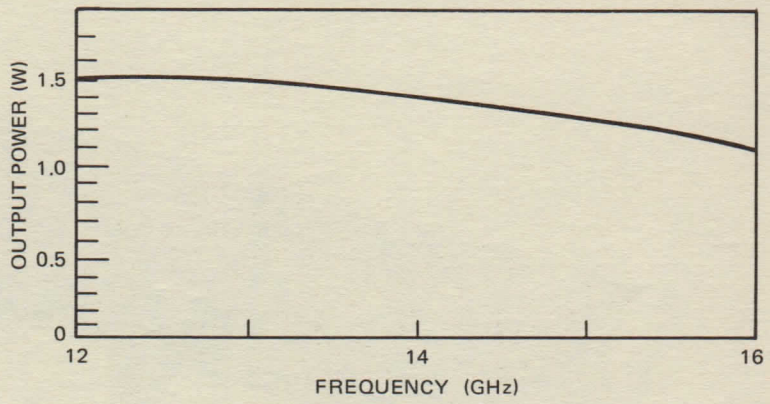

OUTLINE AND MOUNTING DRAWING

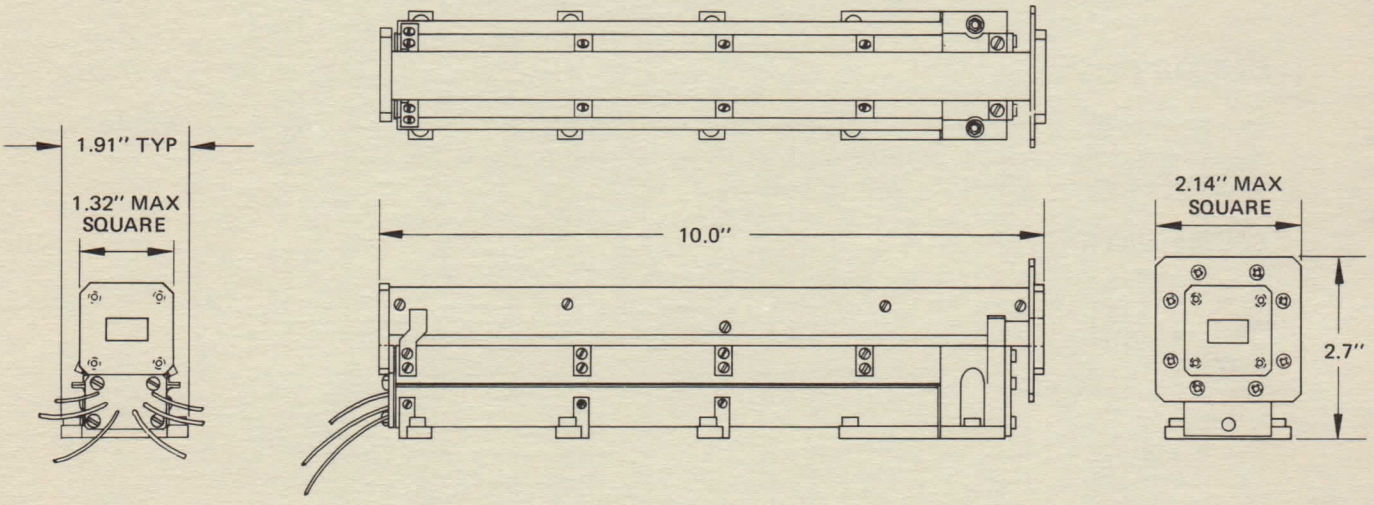

YOUR LOCAL REPRESENTATIVE

HUGHES
HUGHES AIRCRAFT COMPANY
ELECTRON DYNAMICS DIVISION 3100 West Lomita Boulevard, Torrance, California 90509, Tel (213) 534-2121

Printed in U.S.A.—4-74

HUGHES

HUGHES AIRCRAFT COMPANY

ELECTRON DYNAMICS DIVISION

837HC

1 W 13.7-14.1 GHz CW TWT

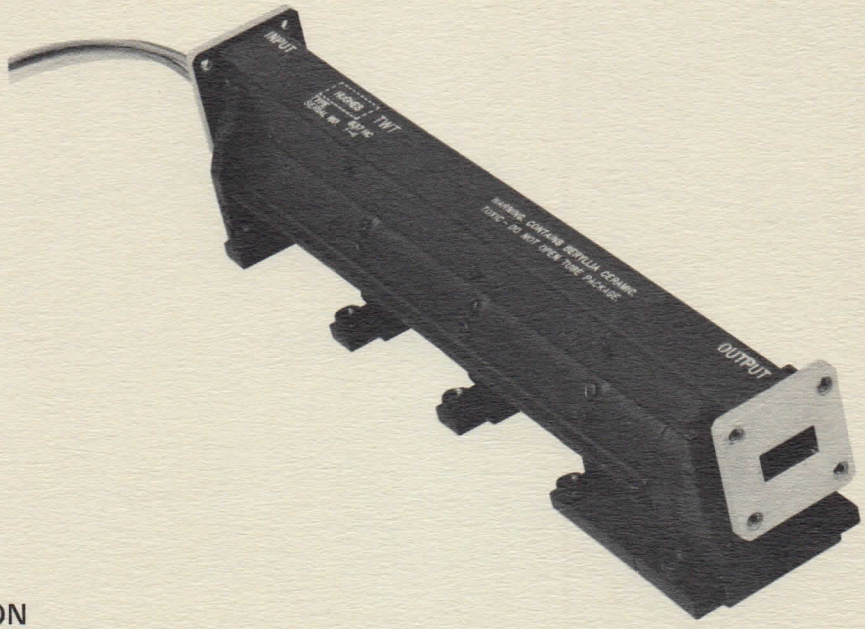

DESCRIPTION

The Hughes Model 837HC is a long-life, space qualified traveling-wave tube that was designed and built for a radar altimeter application. This tube, featuring high gain and low group delay distortion, is the driver for Hughes Model 852HA, a 2 kW pulsed traveling-wave tube.

SPECIFICATIONS*

Frequency	13.7 - 14.1 GHz
Power Output	1 W
Duty	CW
Gain (saturation)	45 dB
Noise Figure	28 dB
Efficiency	8%
Beam Voltage	1880 V
Beam Current	10 mA
Anode Voltage	250 V
Anode Current	0.1 mA
Heater Voltage	4.0 V
Heater Current	245 mA
Construction	metal-ceramic
Cooling	conduction
Focusing	PPM
Weight	1.375 pounds (0.625 kg)
Length	10.4 inches (26.42 cm)
Connectors	WR-62 waveguide
Expected Life	10 years

*All specifications are subject to change without prior notice.

837HC

1 W 13.7-14.1 GHz CW TWT

HUGHES

HUGHES AIRCRAFT COMPANY

ELECTRON DYNAMICS DIVISION

PERFORMANCE CURVE

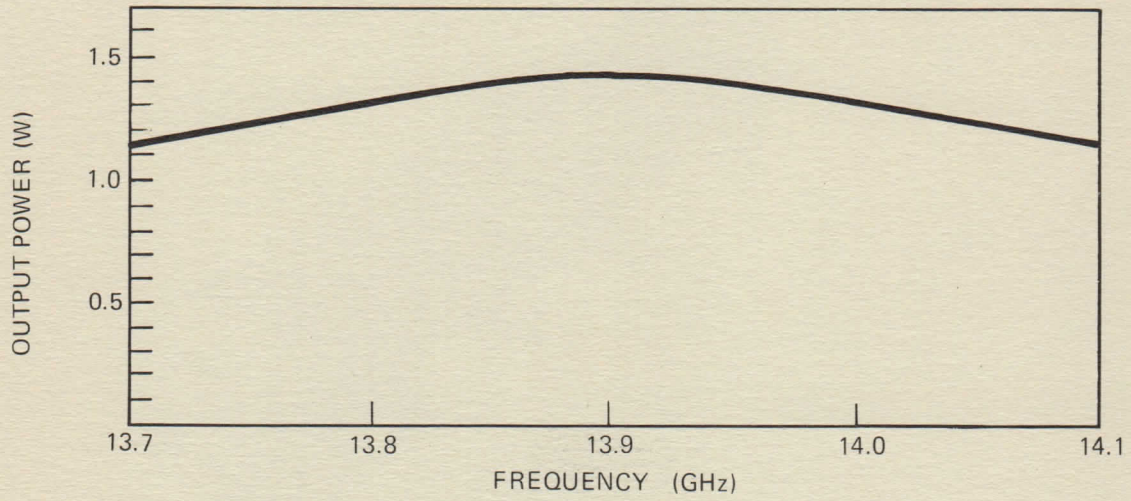

OUTLINE AND MOUNTING DRAWING

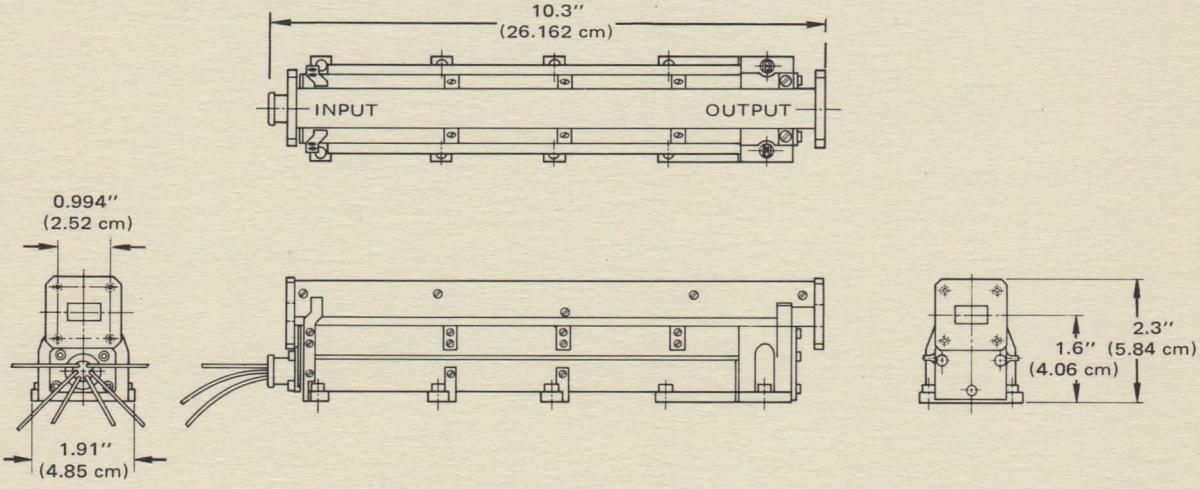

HUGHES
HUGHES AIRCRAFT COMPANY
ELECTRON DYNAMICS DIVISION 3100 West Lomita Boulevard, P.O. Box 2999, Torrance, California 90509, Tel (213) 517-6000

Printed in U.S.A. 3/82 AL

HUGHES

HUGHES AIRCRAFT COMPANY

ELECTRON DYNAMICS DIVISION

837HD

1 W 11.9–12.1 GHz CW TWT

DESCRIPTION

The 837HD is a long-life space qualified traveling-wave tube which features high gain and low group delay distortion. This tube was designed and built for the Japanese Broadcast Satellite.

SPECIFICATIONS*

Frequency	11.9 - 12.1 GHz
Power Output	1.3 W typical
Duty	CW
Gain (saturation)	45 dB
Efficiency	12%
Beam Voltage	1880 V
Beam Current	10 mA
Anode Voltage	250 V
Anode Current	.2 mA
Heater Voltage	4.0 V
Heater Current	245 mA
Construction	metal ceramic
Cooling	conduction
Focusing	PPM
Connectors	WR-75 waveguide
Weight	18 oz (510.3 g)
Length	9.4 in (23.9 cm)
Expected Life	7 years

*Specifications are subject to change without notice.

837HD

HUGHES

HUGHES AIRCRAFT COMPANY

ELECTRON DYNAMICS DIVISION

1 W 11.9–12.1 GHz CW TWT

PERFORMANCE CURVE

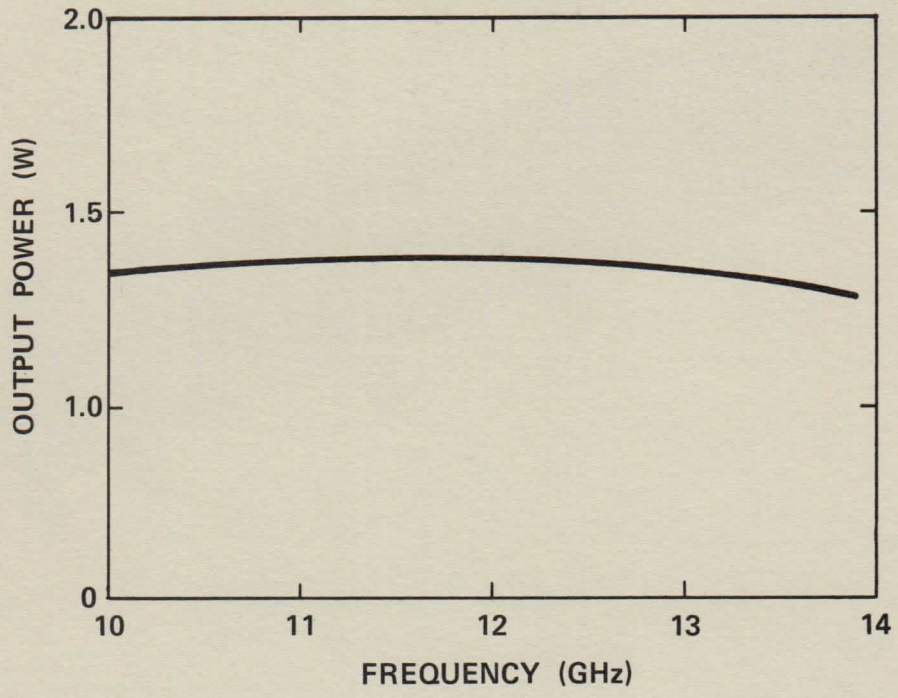

OUTLINE AND MOUTING DRAWING

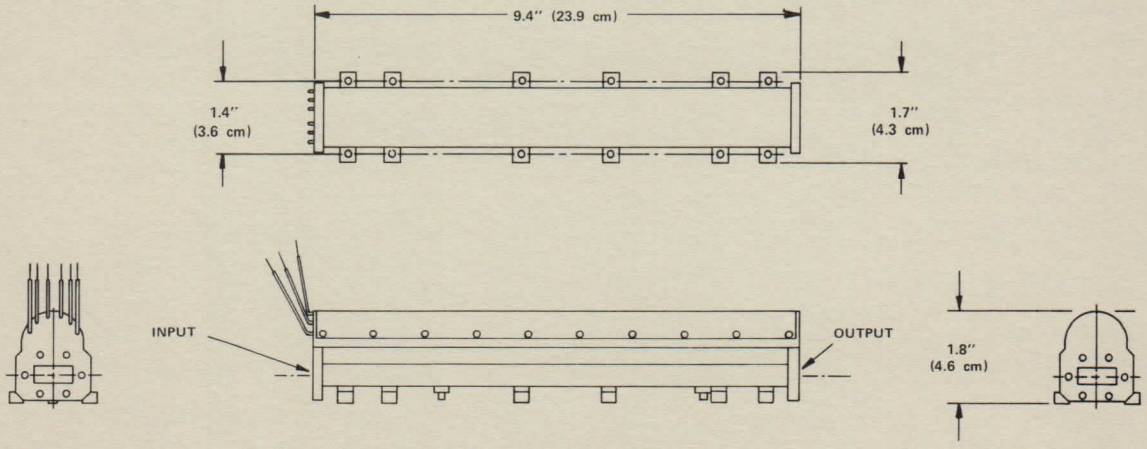

These data are typical values. Operating instructions and electrical characteristics can be obtained upon request.

HUGHES ELECTRON DYNAMICS DIVISION MICROWAVE TRAVELING-WAVE TUBE PRODUCTS 3100 West Lomita Boulevard, Torrance, California 90509. Tel (213) 534-2121

HUGHES AIRCRAFT COMPANY

Printed in U.S.A.—Feb.-76

HUGHES

HUGHES AIRCRAFT COMPANY

ELECTRON DYNAMICS DIVISION

845H

1.5 W 11.85 - 13.8 GHz CW TWT

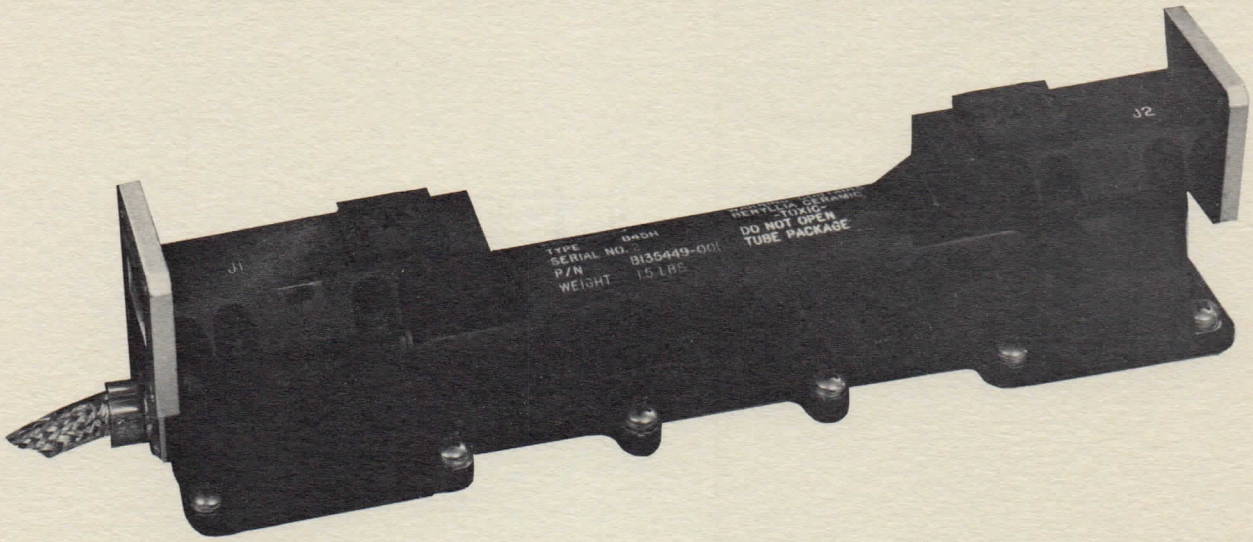

DESCRIPTION

The Hughes Model 845H traveling-wave tube was designed for the Tracking and Data Relay Satellite System. The metal-ceramic construction provides a light-weight rugged package for space applications. The long life and low distortion RF characteristics make this TWT well suited for high reliability communication satellites This TWT is used in the 1268H TWTA.

SPECIFICATIONS*

RF PARAMETERS

Frequency	11.85–13.80 GHz
Output Power	1.5 W minimum
Duty	CW
Saturated Gain	43 dB
Efficiency	18%
Noise Figure	28 dB

ELECTRICAL

Beam Voltage	–2050 V
Beam Current	10 mA
Anode Voltage	150 V
Anode Current	0.04 mA
Heater Voltage	4.0 V
Heater Current	260 mA

MECHANICAL

Construction	metal-ceramic
Cooling	conduction
Focusing	PPM
Weight	23.3 ounces (0.66 kg)
Length	9.79 inches (24.86 cm)
Connectors	WR-75
Expected Life	10 years

*All specifications are subject to change without prior notice.

845H

1.5 W 11.85 - 13.8 GHz CW TWT

HUGHES

HUGHES AIRCRAFT COMPANY

ELECTRON DYNAMICS DIVISION

TYPICAL PERFORMANCE CURVE

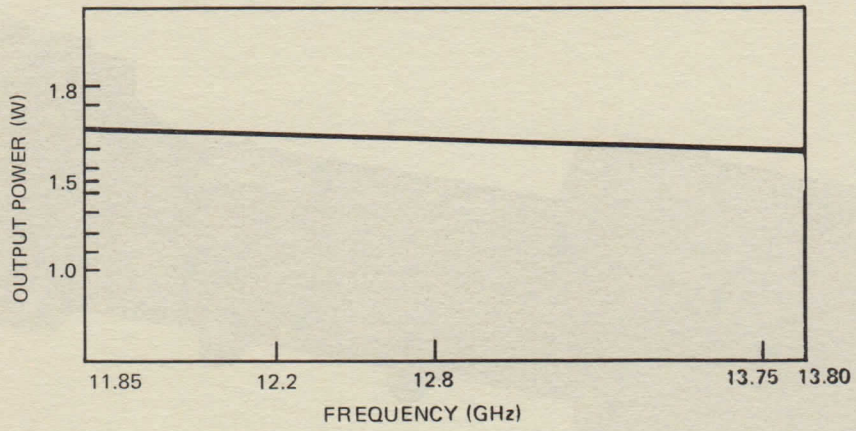

OUTLINE AND MOUNTING DRAWING

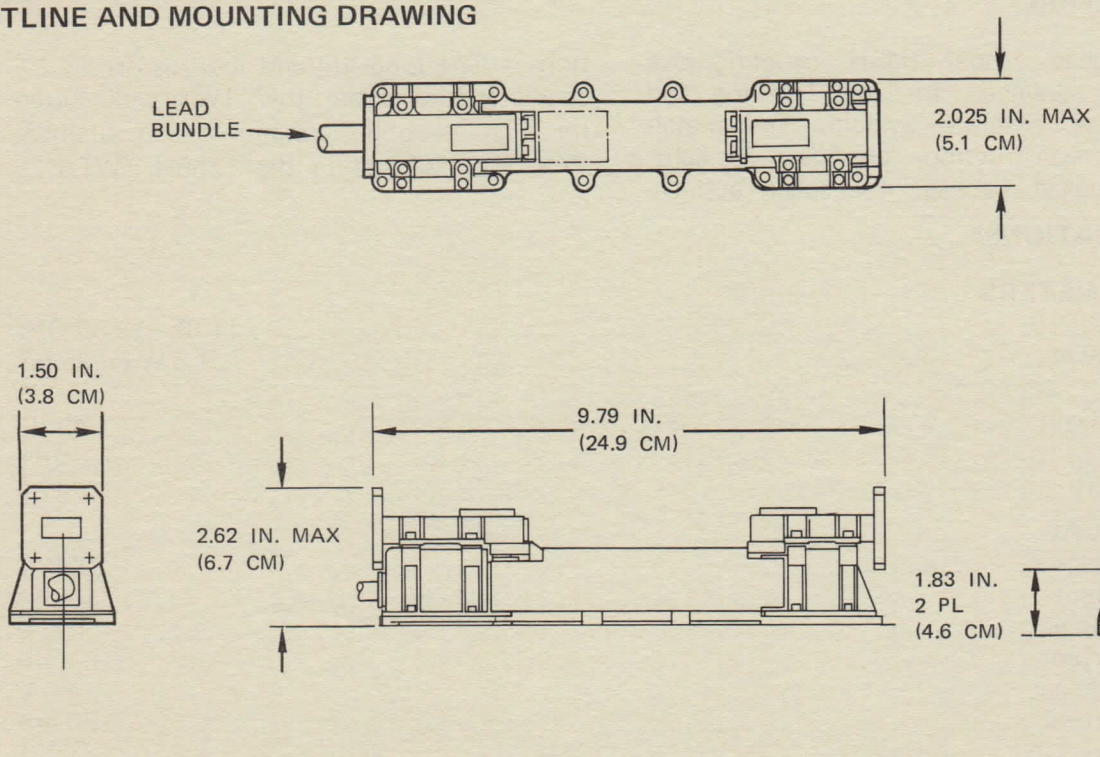

HUGHES
HUGHES AIRCRAFT COMPANY
ELECTRON DYNAMICS DIVISION 3100 West Lomita Boulevard, Torrance, California 90509, Tel (213) 534-2121

Printed in U.S.A. 9-78 AL

HUGHES

HUGHES AIRCRAFT COMPANY

ELECTRON DYNAMICS DIVISION

851H

20 W 13.5-14.5 GHz CW TWT

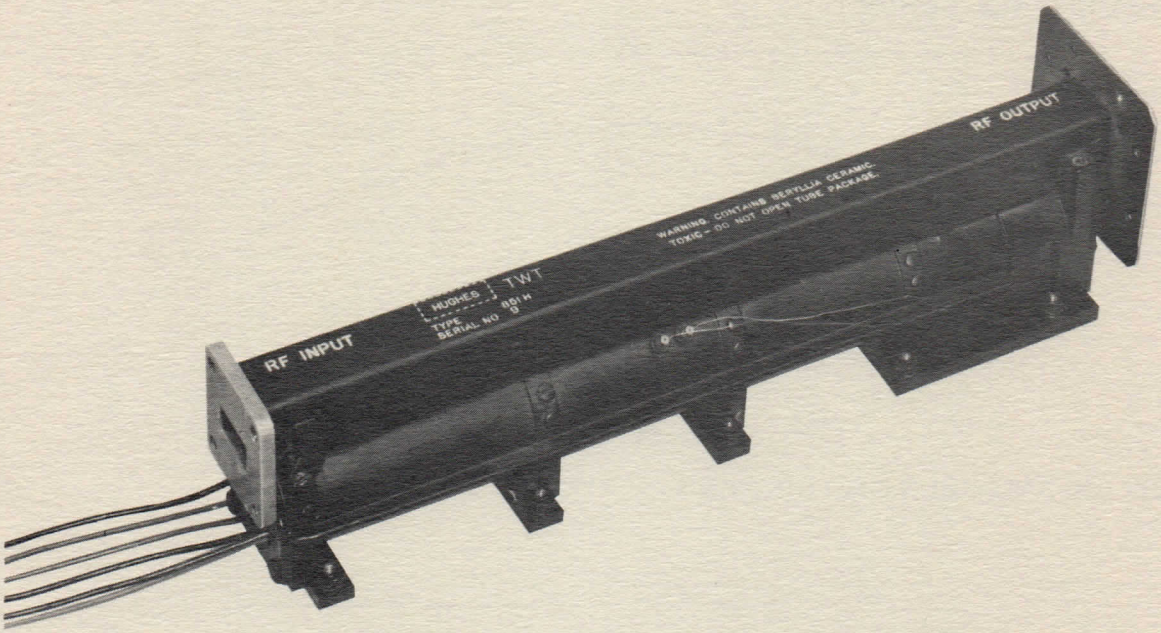

DESCRIPTION

The Hughes Model 851H is a space-qualified traveling-wave tube developed for the Skylab Program. This tube will be used as part of a passive microwave and radar system to study the earth from space. The tube has a thermal couple incorporated to monitor helix temperature.

SPECIFICATIONS

Frequency	13.5-14.0 GHz
Power Output	20 W
Duty	CW
Gain (saturation)	53 dB
Efficiency	25%
Beam Voltage	3550 V
Beam Current	50 mA
Anode Voltage	200 V
Anode Current	0.1 mA
Heater Voltage	5.2 V
Heater Current	310 mA
Construction	Metal Ceramic
Cooling	Conduction
Focusing	PPM
Weight	26 ounces
Length	10 inches
Connectors (mate with)	UG 419/U

851H

20 W 13.5-14.5 GHz CW TWT

HUGHES

HUGHES AIRCRAFT COMPANY

ELECTRON DYNAMICS DIVISION

PERFORMANCE CURVE

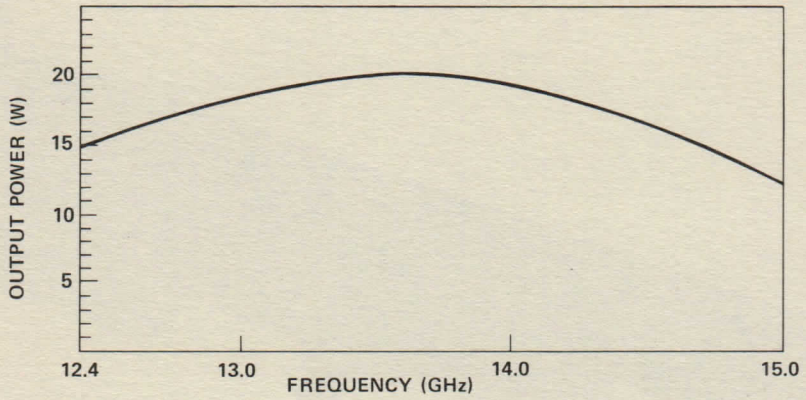

OUTLINE AND MOUNTING DRAWING

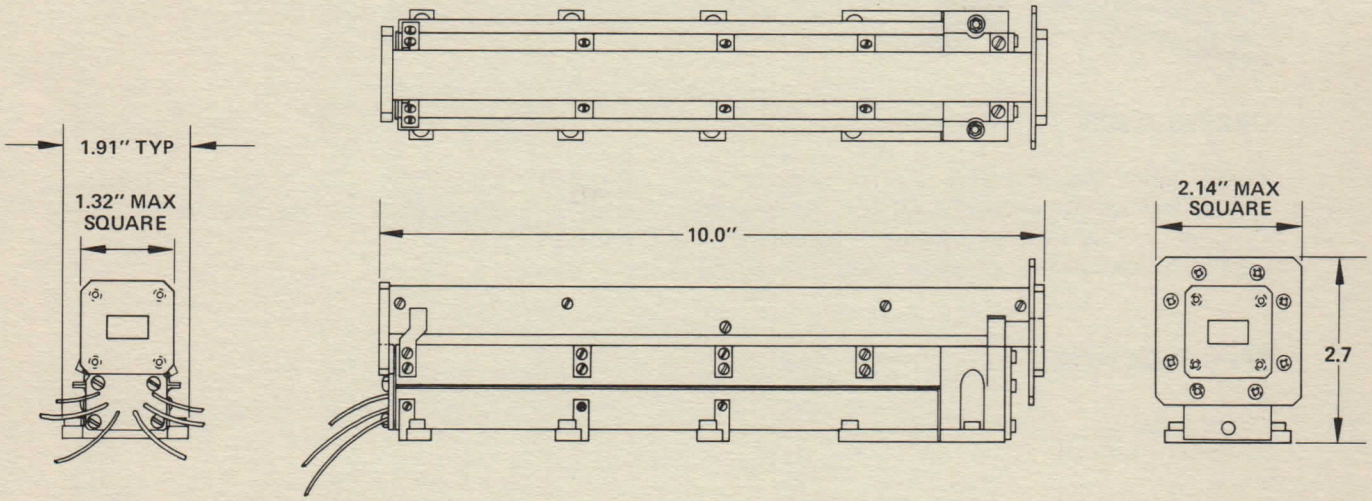

YOUR LOCAL REPRESENTATIVE

HUGHES
HUGHES AIRCRAFT COMPANY
ELECTRON DYNAMICS DIVISION / 3100 W. LOMITA BLVD. TORRANCE, CA.90509/TEL (213) 534-2121

Printed in U.S.A. –7–72

HUGHES

HUGHES AIRCRAFT COMPANY

ELECTRON DYNAMICS DIVISION

854H

Ku-Band Pulsed TWT

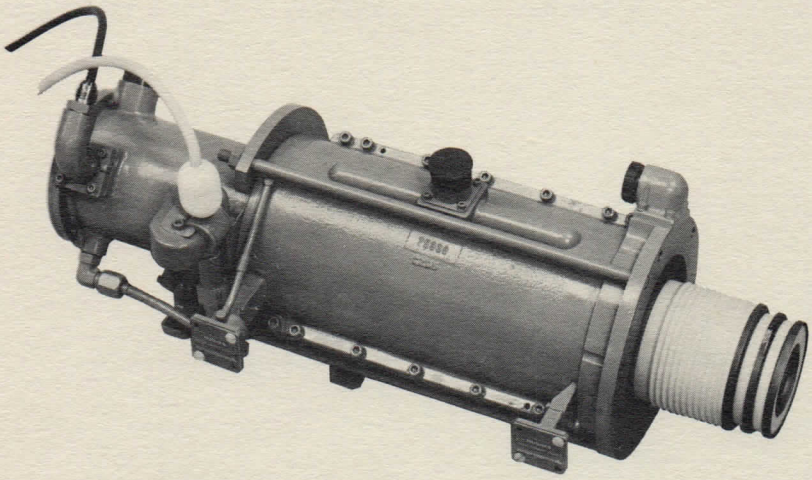

FEATURES

- 100 kW Peak Power
- Broadband
- Shadow Grid Modulation
- High Gain
- High Efficiency
- Solenoid Focusing
- Liquid Cooling

DESCRIPTION

The Hughes Model 854H is a high power traveling-wave tube with 100 kW peak power and an integral solenoid for reduced size and weight. The tube covers the 16.0 to 16.5 GHz bandwidth with 53 dB gain, is liquid cooled and has non-intercepting shadow grid modulation. The 854H has a 3% duty cycle, weighs less than 45 pounds, and is designed to meet MIL-E-5400, class 2.

PERFORMANCE SPECIFICATIONS	MINIMUM	TYPICAL	MAXIMUM
Frequency	16.0 GHz	–	16.5 GHz
Output Power	100 kW	120 kW	160 kW
Saturated Gain	50 dB	53 dB	60 dB
Duty	–	0.03	0.035
Depressed Efficiency	27%	32%	–
ELECTRICAL PARAMETERS			
Cathode Voltage	–55 kV	–65 kV	–67 kV
Cathode Current	–	8.1 A	8.5 A
Body Voltage	–	ground	–
Body Current (with RF)	–	0.4 A	1.0 A
Collector Voltage	0	–20 kV	–25 kV
Collector Current (with RF)	–	7.7 A	–
Heater Voltage (dc or ac)	9.0 V	11.0 V	12.0 V
Heater Current	3.0 A	3.7 A	5.0 A
Solenoid Voltage	80 V	100 V	120 V
Solenoid Current	–	21 A	25 A
Grid Drive	400	700	800
Grid Bias	–500	–700	–800
Grid Current	–	10 mA	50 mA
Ion Pump Voltage	3.0 kV	3.3 kV	3.6 kV
Ion Pump Current	–	<5 μA	1 mA

854H

Ku-Band Pulsed TWT

HUGHES

HUGHES AIRCRAFT COMPANY

ELECTRON DYNAMICS DIVISION

MECHANICAL SPECIFICATIONS	MINIMUM	TYPICAL	MAXIMUM
Weight	–	43 pounds	45 pounds
Cooling:			
Coolant Type	–	coolanol 25	–
Flow Rate	3 gpm	–	–
Pressure Drop	–	18 psi	20 psi

TYPICAL PERFORMANCE CURVE

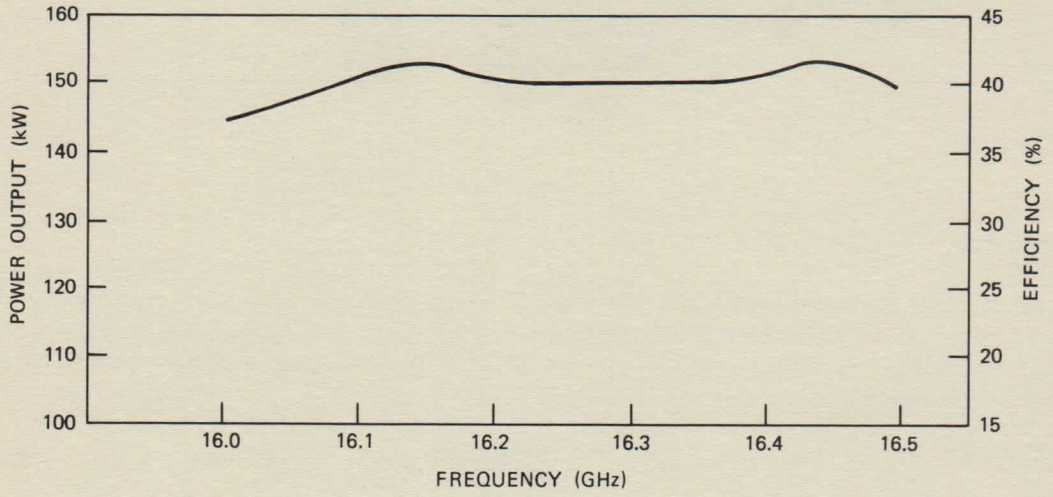

OUTLINE DRAWING

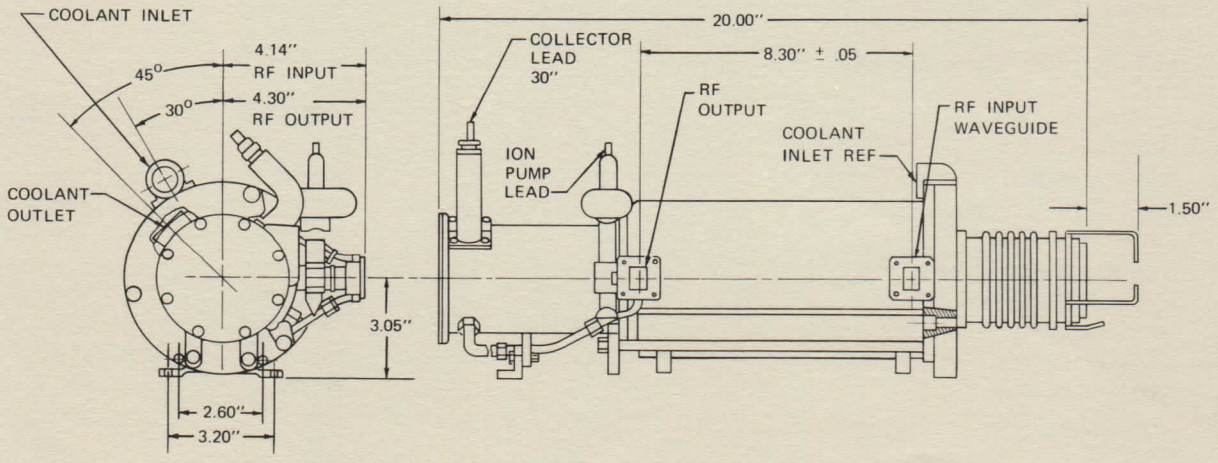

HUGHES
HUGHES AIRCRAFT COMPANY

MICROWAVE TRAVELING-WAVE TUBE PRODUCTS
ELECTRON DYNAMICS DIVISION 3100 West Lomita Boulevard, Torrance, California 90509, Tel (213) 534-2121

PRINTED IN U.S.A. 7-74

HUGHES

HUGHES AIRCRAFT COMPANY

ELECTRON DYNAMICS DIVISION

861H

Ku-Band Pulsed TWT

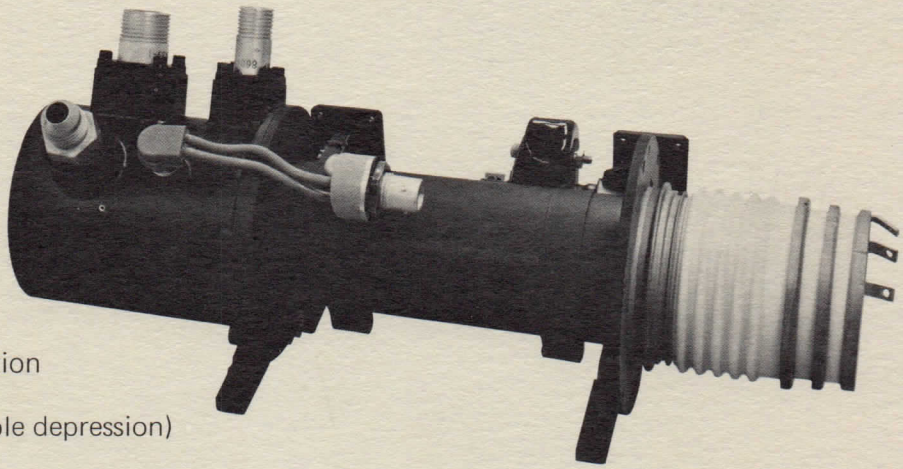

FEATURES

- 12 kW Peak Power
- Broadband
- Shadow Grid Modulation
- High Gain
- High Efficiency (double depression)
- PPM Focusing
- Liquid Cooling
- Lightweight
- Environmentalized*

PERFORMANCE SPECIFICATIONS	MINIMUM	TYPICAL	MAXIMUM
Frequency	16.5 GHz	–	17.0 GHz
Output Power	12 kW	13.5 kW	–
Saturated Gain	45 dB	47 dB	52 dB
Duty	–	–	2.5%
Depressed Efficiency	36%	40%	–
ELECTRICAL PARAMETERS			
Cathode Voltage	-28 kV	-29.5 kV	-30.5 kV
Cathode Current	1.8 A	2.0 A	2.1 A
Body Voltage	–	ground	–
Body Current (with RF)	–	0.26 A	0.28 A
Collector Voltage No. 1	-11.5 kV	-12.5 kV	-13.5 kV
Collector Current No. 1 (with RF)	–	0.25 A	0.70 A
Collector Voltage No. 2	-14.5 kV	-15.5 kV	-16.5 kV
Collector Current No. 2 (with RF)	–	1.5 A	2.1 A
Heater Voltage (dc or ac)	8 V	9 V	10 V
Heater Current	2.5 A	3.5 A	4.0 A
Grid Drive	+150 V	+200 V	+250 V
Grid Bias	-360 V	-400 V	-600 V
Grid Current	–	5 mA	25 mA
Ion Pump Voltage	3.0 kV	3.3 kV	3.6 kV
Ion Pump Current	–	<5μA	1 mA
MECHANICAL SPECIFICATIONS			
Weight	–	11.3 pounds	12 pounds
Cooling:			
Coolant Type	–	DC 331 or equivalent	–
Flow Rate	1.8 gal/min	–	–
Pressure Drop	–	–	5 psi

*Designed to meet MIL-E-5400 Class 2

861H

Ku-Band Pulsed TWT

HUGHES

HUGHES AIRCRAFT COMPANY

ELECTRON DYNAMICS DIVISION

TYPICAL PERFORMANCE CURVE

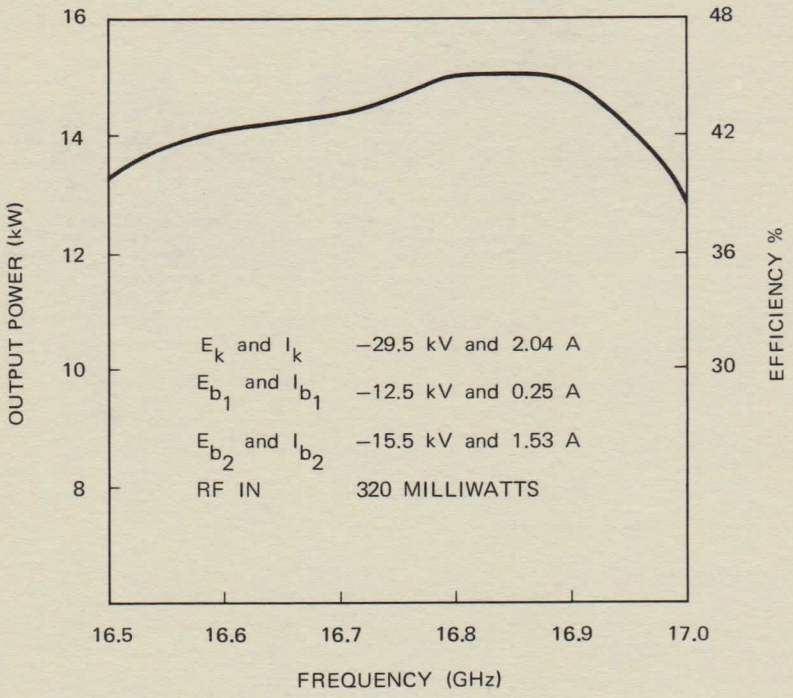

OUTLINE DRAWING

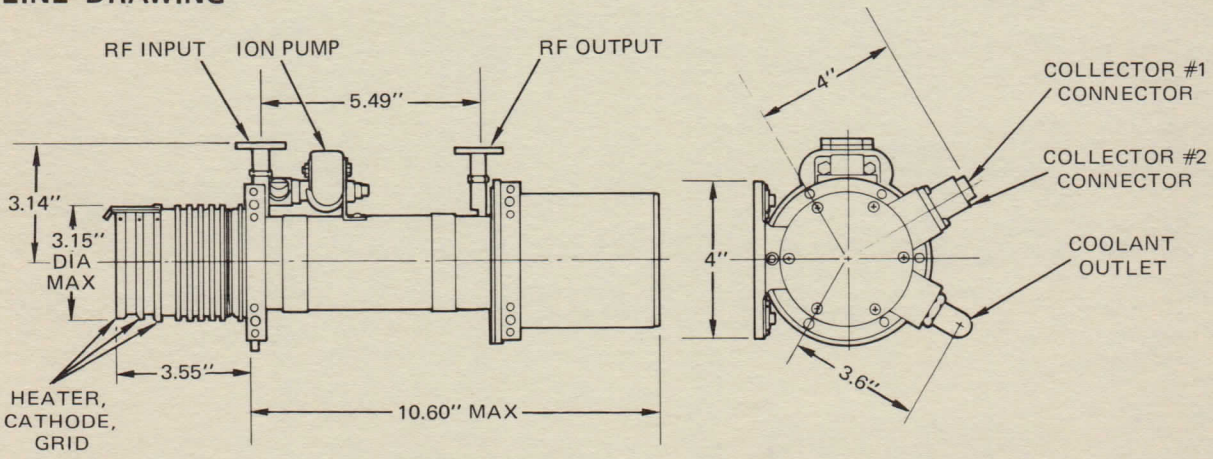

YOUR LOCAL REPRESENTATIVE

HUGHES
HUGHES AIRCRAFT COMPANY
ELECTRON DYNAMICS DIVISION 3100 West Lomita Boulevard, Torrance, California 90509, Tel (213) 534-2121

Printed in U.S.A.—8—73

HUGHES

HUGHES AIRCRAFT COMPANY

ELECTRON DYNAMICS DIVISION

866H

10 kW 15.7 – 17.7 GHz TWT

FEATURES

- 10 kW Peak Power
- Broadband
- Anode Modulation
- High Gain
- High Efficiency
- Integral Solenoid
- Liquid Cooling

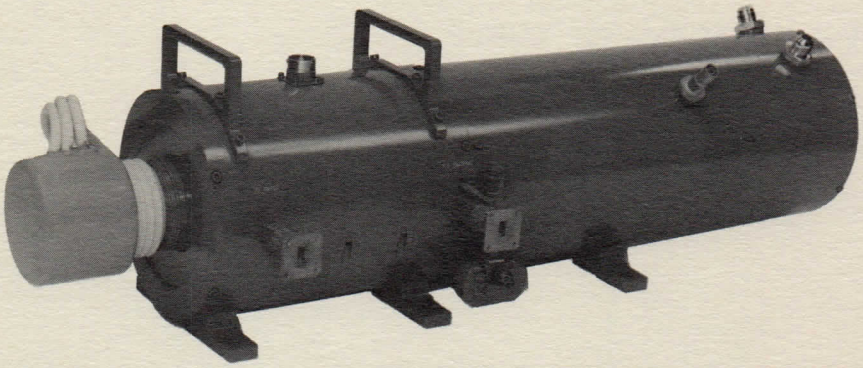

PERFORMANCE SPECIFICATIONS

	MINIMUM	TYPICAL	MAXIMUM
Frequency	15.7 GHz		17.7 GHz
Output Power	10 kW	12 kW	13 kW
Saturated Gain	31	33 dB	
Duty			50%
Depressed Efficiency (including solenoid power)		17.3%	

ELECTRICAL PARAMETERS

Cathode Voltage	-28.5 kV	-29.5 kV	-30.5 kV
Cathode Current	3.2 A	3.4 A	3.5 A
Body Voltage		ground	
Body Current (with RF)		0.15 A	0.25 A
Collector Voltage	-10 kV	-10 kV	-12 kV
Collector Current (with RF)	3.0 A	3.25 A	3.5 A
Modulating Anode Pulse		ground	
Modulating Anode Bias (W/R to cathode)	-500 V		0 V
Anode Current		1 mA	20 mA
Heater Voltage	6.0 V	6.5 V	7.5 V
Heater Current	4.5 A	5.3 A	6.0 A
Solenoid Voltage	150 V	200 V	220 V
Solenoid Current	7 A	8.6 A	11 A
Ion Pump Voltage	-3.0 kV	3.3 kV	3.6 kV
Ion Pump Current		<5.0 μA	100 μA

MECHANICAL SPECIFICATIONS

Weight	70 pounds (31.75 kg)
Cooling:	
Coolant Type	deionized water
Collector Flow Rate	6 gpm (22.74 liters per minute)
Collector Pressure Drop	40 psi
Solenoid Flow Rate	2 gpm (7.58 liters per minute)
Solenoid Pressure Drop	35 psi
Body Flow Rate	2 gpm (7.58 liters per minute)
Body Pressure Drop	35 psi

866H

10 kW 15.7 – 17.7 GHz TWT

HUGHES

HUGHES AIRCRAFT COMPANY

ELECTRON DYNAMICS DIVISION

TYPICAL PERFORMANCE CURVE

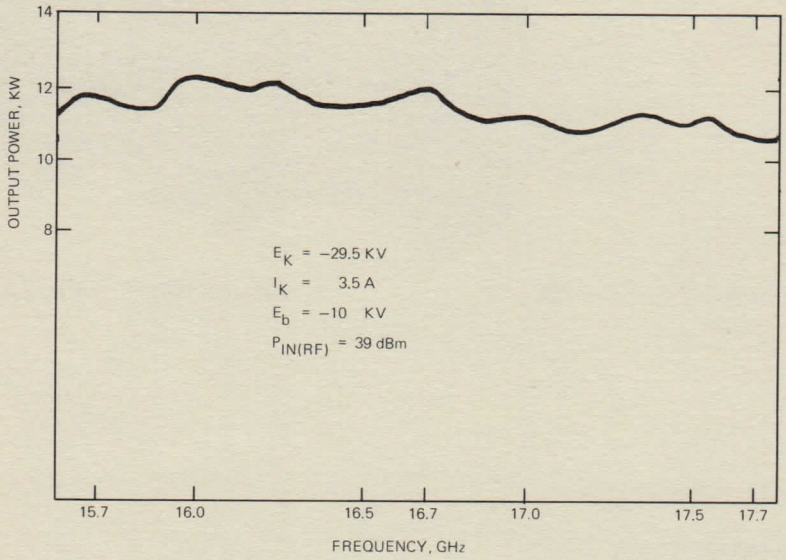

OUTLINE DRAWING

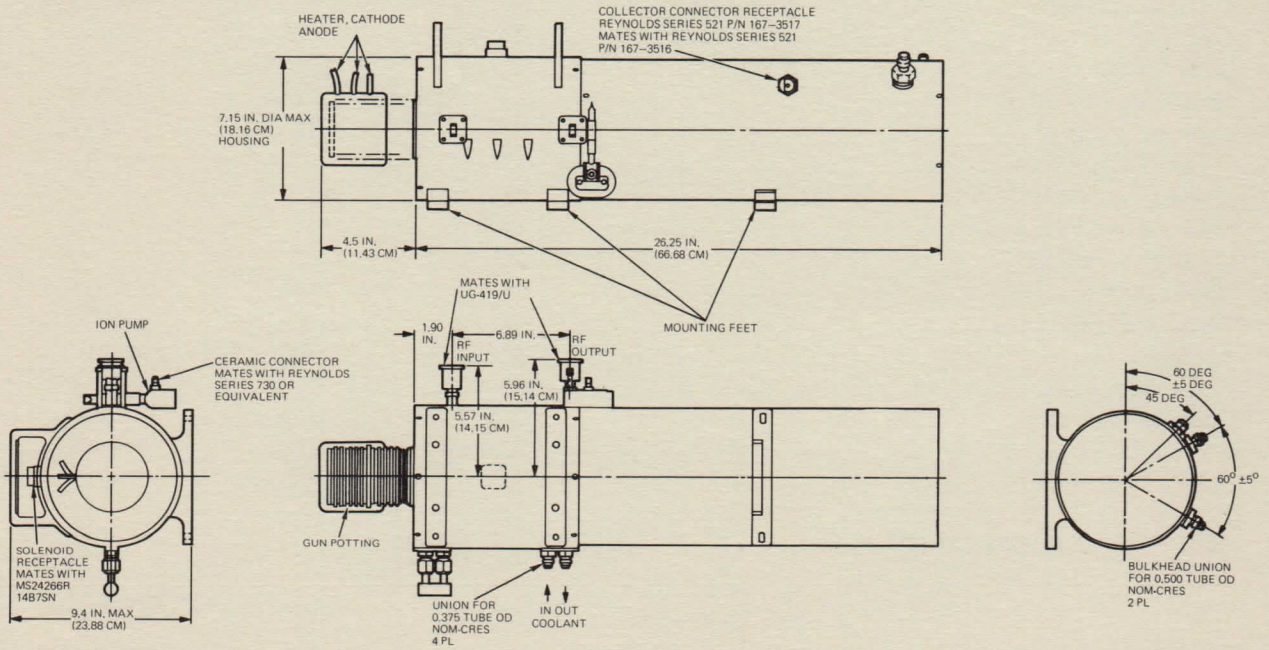

HUGHES

HUGHES AIRCRAFT COMPANY

ELECTRON DYNAMICS DIVISION TWT 3100 West Lomita Boulevard, Torrance, California 90509, Tel (213) 534-2121

Printed in U.S.A. - 8-76

HUGHES

HUGHES AIRCRAFT COMPANY

ELECTRON DYNAMICS DIVISION

870H

5KW CW Ku Band TWT

FEATURES

- 5 kW CW Power
- Depressed Collector
- Mod Anode
- Integral Solenoid
- Liquid Cooled
- High Gain
- High Efficiency

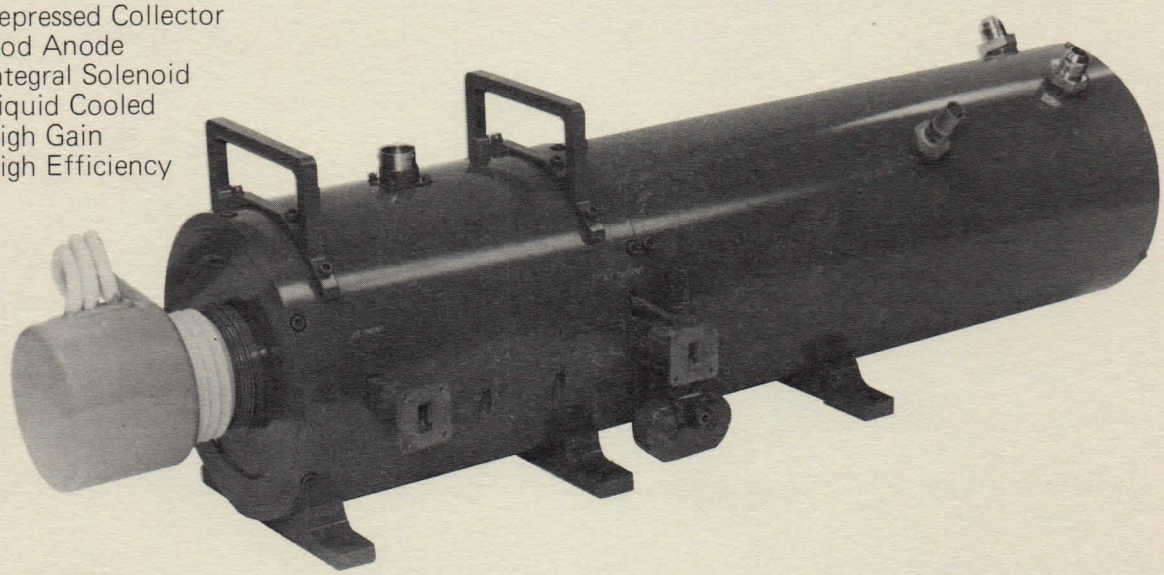

PERFORMANCE SPECIFICATIONS	MINIMUM	TYPICAL	MAXIMUM
Frequency	14.0 GHz	—	14.5 GHz
Output Power	5.0 kW	—	—
Saturated Gain	—	43 dB	—
Duty	—	—	CW
Depressed Efficiency	—	25%	—
ELECTRICAL PARAMETERS			
Cathode Voltage	−18.0 kV	−18.7 kV	−19.5 kV
Cathode Current	—	1.63 A	1.8 A
Body Voltage	—	ground	—
Body Current (with RF)	—	0.125 A	0.150 A
Collector Voltage	0	−7.0 kV	−8.0 kV
Collector Current (with RF)	—	1.50	1.8 A
Heater Voltage	—	6.0 V	7.5 V
Heater Current	—	5.1 A	6.0 A
Solenoid Voltage	180 V	212 V	220 V
Solenoid Current	—	8.8 A	10 A
Ion Pump Voltage	3.0 kV	3.3 kV	3.6 kV
Ion Pump Current	—	$< 5.0\ \mu A$	100 μA
MECHANICAL SPECIFICATIONS			
Weight		65 pounds (29.48 Kg)	
Cooling			
Coolant Type		deionized water	
Collector Flow Rate		6 gal/min (.378 liters/sec.)	
Collector Pressure Drop		40 psi (0.276 kN/m^2)	
Solenoid Flow Rate		2 gal/min (.126 liters/sec.)	
Solenoid Pressure Drop		35 psi (0.241 kN/m^2)	

870H

5KW CW Ku Band TWT

HUGHES

HUGHES AIRCRAFT COMPANY

ELECTRON DYNAMICS DIVISION

PERFORMANCE CURVES

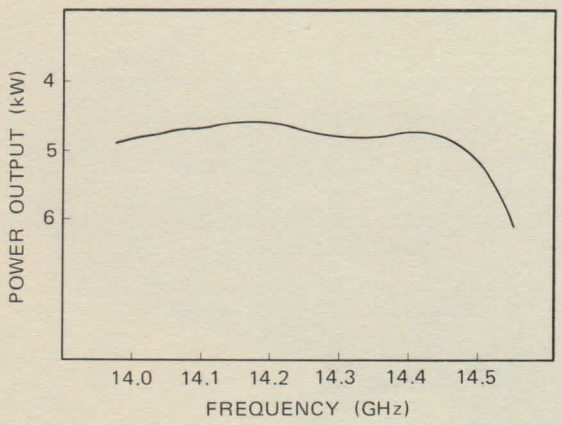

SATURATED OUTPUT POWER

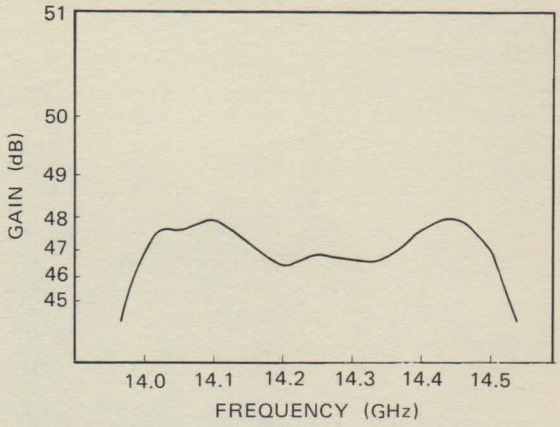

SMALL SIGNAL GAIN
WITH INPUT EQUALIZATION

OUTLINE DRAWING

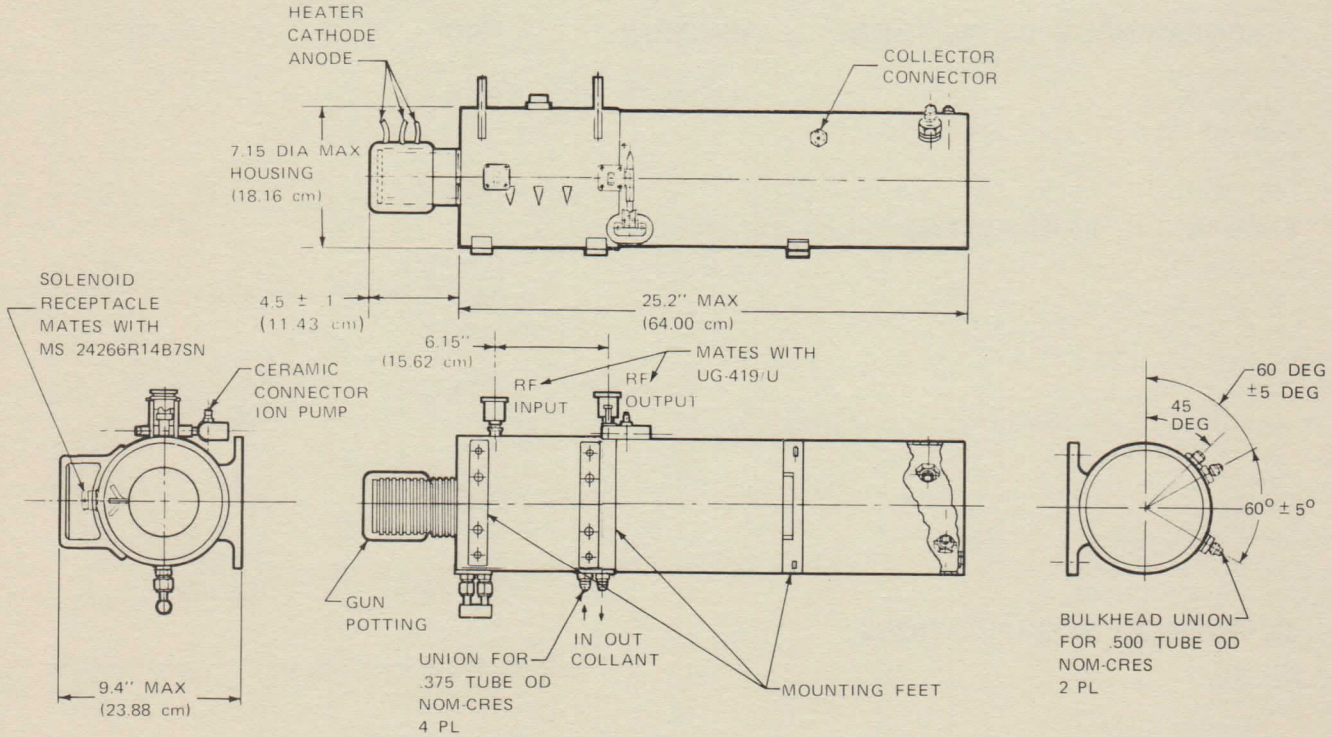

HUGHES
HUGHES AIRCRAFT COMPANY
ELECTRON DYNAMICS DIVISION
3100 West Lomita Boulevard, Torrance, California 90509, Tel (213) 534-2121

Printed in U.S.A. 11—76

HUGHES

HUGHES AIRCRAFT COMPANY

ELECTRON DYNAMICS DIVISION

874H

50 W 13.75–15.1 GHz CW TWT

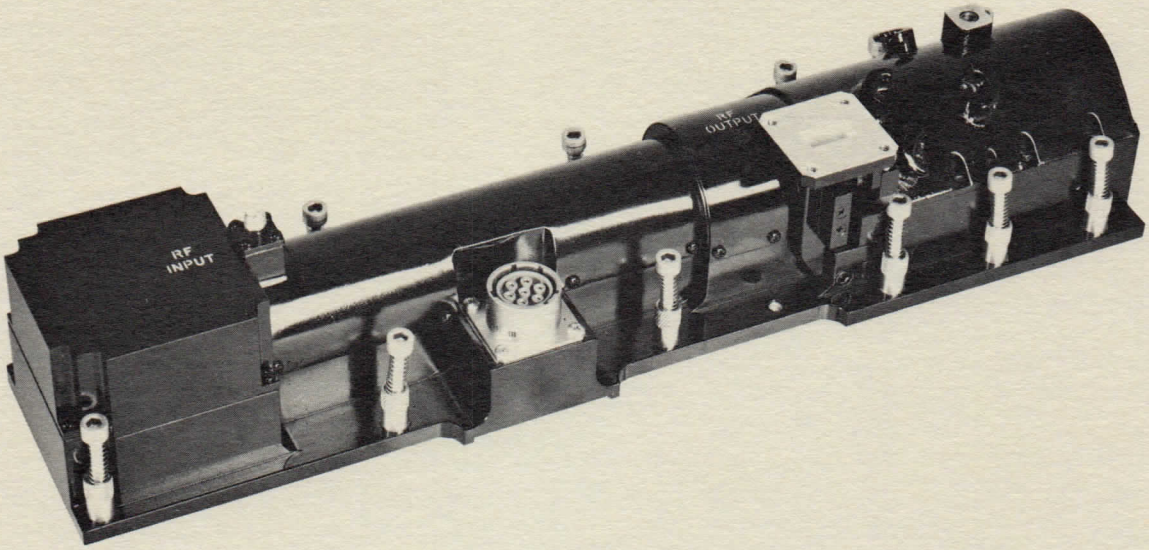

DESCRIPTION

The Hughes Model 874H traveling-wave tube was designed and built for the Space Shuttle on-board radar and communication applications. This tube incorporates a dispenser cathode, Samarium cobalt focusing structure and a three stage collector in a ruggedized package for high reliability. The design of this high powered Ku-Band TWT is derived from our extensive space tube experience.

SPECIFICATIONS*

RF

Frequency	13.75 – 15.1 GHz
Power Output	50W
Duty	CW
Gain at Rated Power	42 dB minimum
Noise Figure	35 dB maximum
AM/PM Conversion	8°/dB maximum
Gain Ripple (±100 MHz)	±0.5 dB
VSWR Output Hot	1.7:1 maximum
Input Hot	1.7:1 maximum
Efficiency	43%

ELECTRICAL

Beam Voltage	–7050 V
Beam Current	65 mA
Anode Voltage	300 V
Anode Current	0.2 mA
Collector Voltage	
1st Stage	–4600 V
2nd Stage	–5300 V
3rd Stage	–6600 V
Collector Current (with RF)	
1st Stage	34 mA
2nd Stage	20 mA
3rd Stage	12 mA
Heater Voltage	6.3 V
Heater Current	0.73 A

MECHANICAL

Construction	metal–ceramic
Cooling	conduction
Focusing	PPM $SmCo_5$ magnets
Weight	4.5 pounds (2 kg)
Length	14 inches (35.6 cm)
Connectors	
DC	Reynolds 167–9455
RF	input SMA
	output WR–62 waveguide
Operating Temperature	0°F to 175°F (-18°C to 80°C)

*Subject to change without notice.

TYPICAL PERFORMANCE CURVE

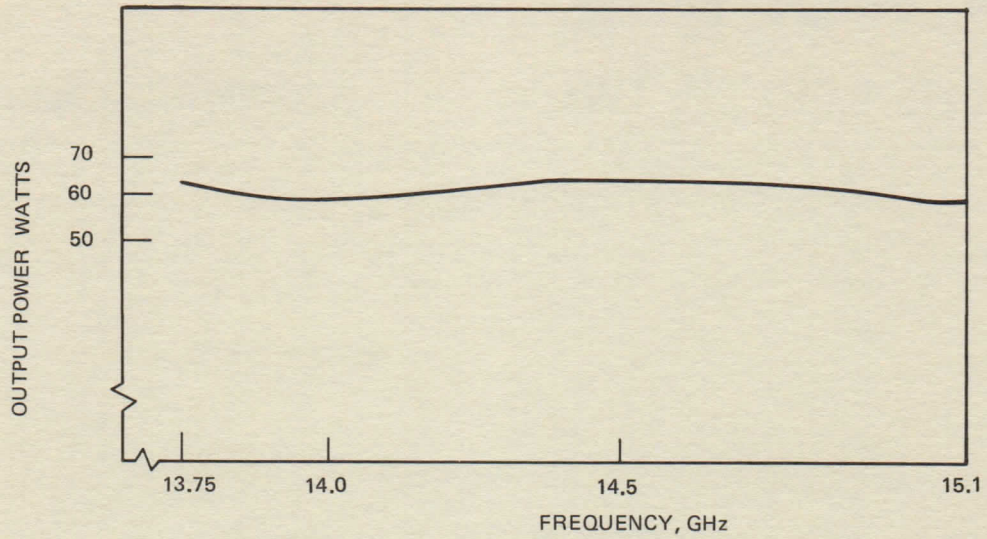

OUTLINE DRAWING

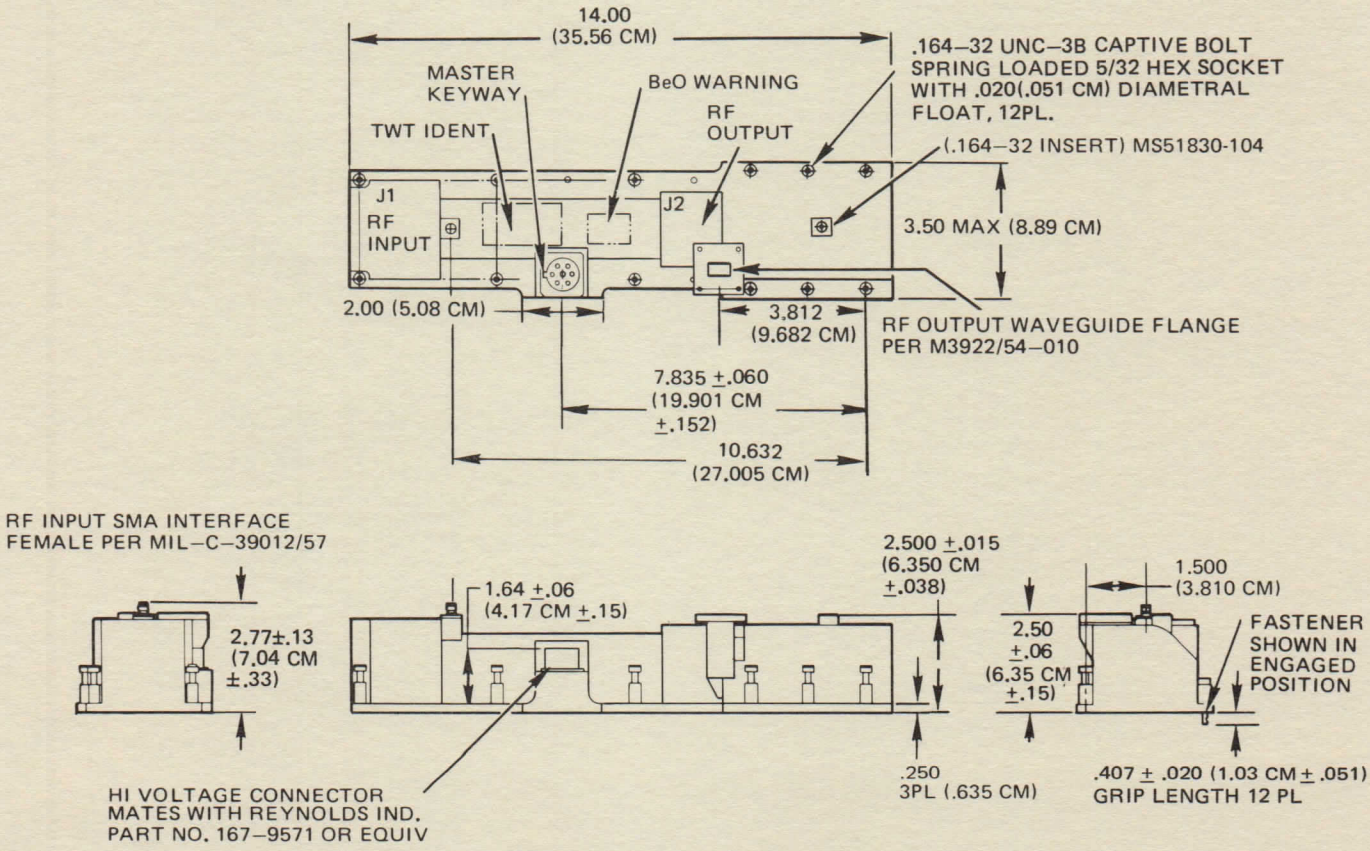

874H

50 W 13.75–15.1 GHz CW TWT

HUGHES

HUGHES AIRCRAFT COMPANY

ELECTRON DYNAMICS DIVISION

HUGHES
HUGHES AIRCRAFT COMPANY
ELECTRON DYNAMICS DIVISION 3100 West Lomita Boulevard, Torrance, California 90509, Tel (213) 534-2121

PRINTED IN U.S.A. 5/79 AL

HUGHES

HUGHES AIRCRAFT COMPANY

ELECTRON DYNAMICS DIVISION

8281H

300W 2.0-2.3 GHz CW TWT

FEATURES

- 300W CW
- High Efficiency
- Highly Reliable
- Long Life
- Heat Pipe Cooling
- Space Qualifiable Design
- Multi-Stage Collector
- Velocity Taper Helix
- Low Operating Temperature
- Low Thermal Load

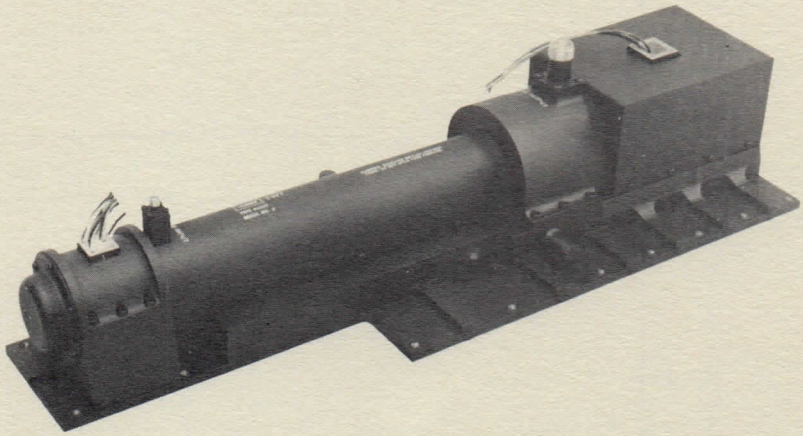

PERFORMANCE SPECIFICATIONS

Frequency	2.0 – 2.3 GHz
Power Out	300W
Duty	CW
Gain (saturation)	40 dB
Efficiency	> 50%
Life	10 years

ELECTRICAL PARAMETERS (Voltages With Respect To Ground)

Cathode Voltage	-4675V
Cathode Current	167 mA
Anode Voltage	250V
Collector 1	0V
Collector 2	-950V
Collector 3	-1600V
Collector 4	-3225V
Heater Voltage	6.3V
Cathode Loading	184 mA/cm^2

MECHANICAL SPECIFICATIONS

Weight	18.5 pounds (8.4 kg)
Cooling	conduction
Size	22 inches, length (55.9 cm)
Connectors RF Input	SMA
RF Output	TNC
DC	flying leads
Construction	metal ceramic
Focusing	PPM

8281H

300W 2.0-2.3 GHz CW TWT

HUGHES

HUGHES AIRCRAFT COMPANY

ELECTRON DYNAMICS DIVISION

TYPICAL PERFORMANCE CURVE

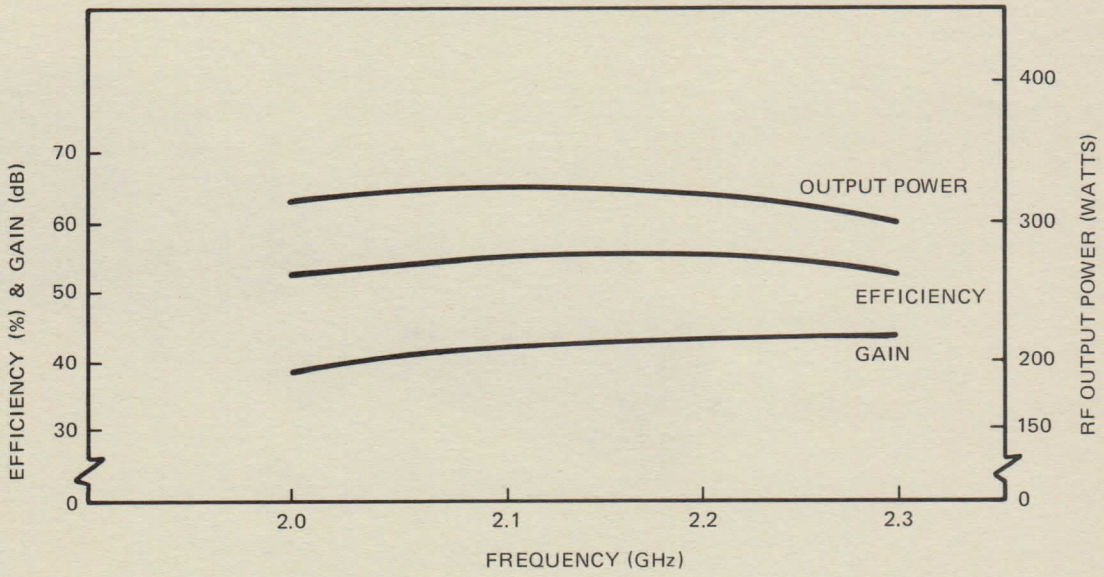

OUTLINE DRAWING

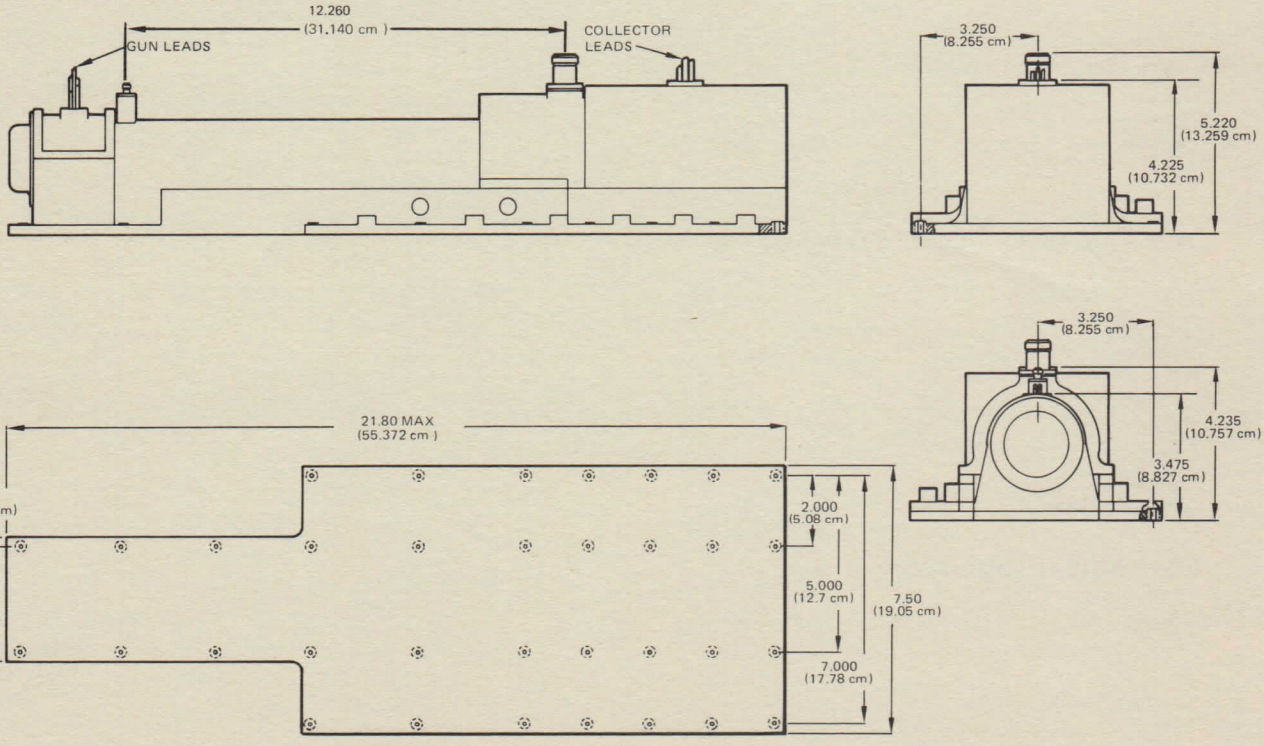

HUGHES ELECTRON DYNAMICS DIVISION 3100 West Lomita Boulevard, P.O. Box 2999, Torrance, California 90509, Tel (213) 534-2121

HUGHES AIRCRAFT COMPANY

Printed in U.S.A. 6/80 AL

HUGHES

HUGHES AIRCRAFT COMPANY

ELECTRON DYNAMICS DIVISION

8507H

200W 2.5 - 8.0 GHz CW TWT

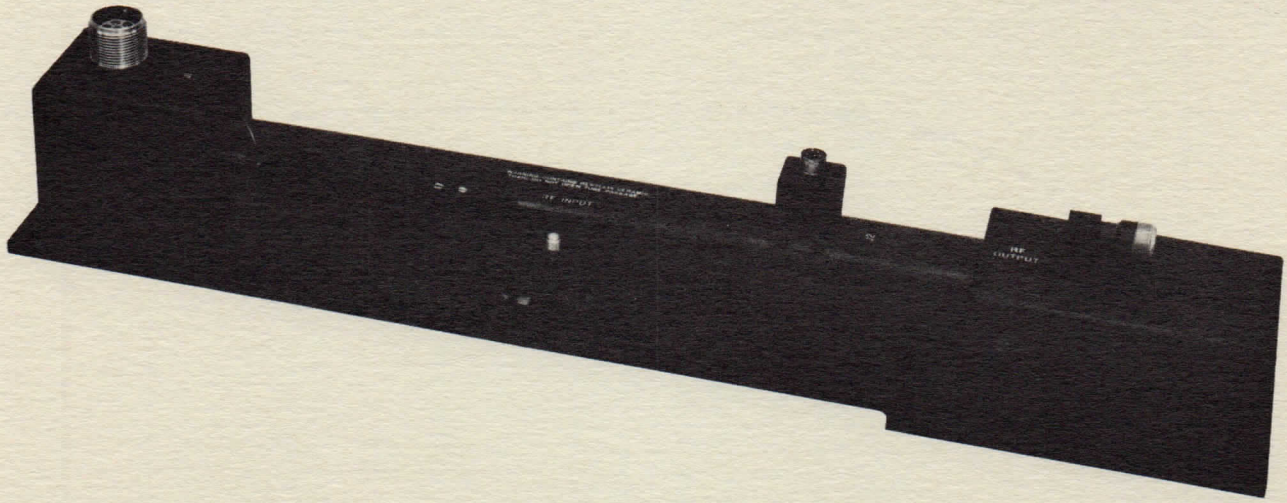

DESCRIPTION

The 8507H is a broadband, high gain, grid controlled CW TWT operating in the frequency range 2.5 to 8.0 GHz. Using PPM focusing, its CW output power is 200 watts. The rugged construction, utilizing conduction cooling, is well suited for operation in airborne military environments.

NOTE: all voltages, except grid, are with respect to the helix, which is grounded.

SPECIFICATIONS*

Frequency	2.5 – 8.0 GHz
Power Output	200 W
Duty	CW
Large Signal Gain (nominal)	42 dB
Beam Voltage	-6.2 kV
Beam Current	0.41 A
Grid Drive	250 V DC
Grid Bias	-200 V DC
Heater Voltage	6.3 V
Heater Current	2.2 A
Collector Voltage	multi-stage depressed
Weight	10.0 pounds (4.5 kg)
Length	21.5 inches (54.6 cm)
Cooling	conduction
RF Input Connector	SMA
RF Output Connector	SC
DC Voltage Connector	Rowe PN 28RC1607M
Environment	MIL-E-5400 Class 2
Cooling	conduction

*All specifications are subject to change without prior notice.

8507H

200W 2.5 - 8.0 GHz CW TWT

HUGHES

HUGHES AIRCRAFT COMPANY

ELECTRON DYNAMICS DIVISION

PERFORMANCE CURVE

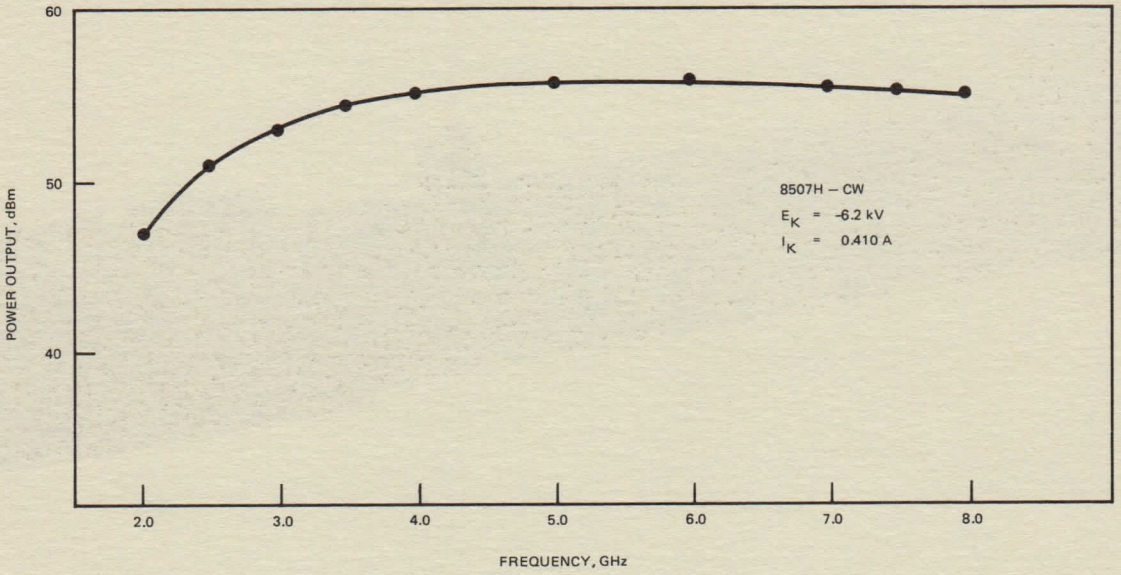

OUTLINE AND MOUNTING DRAWING

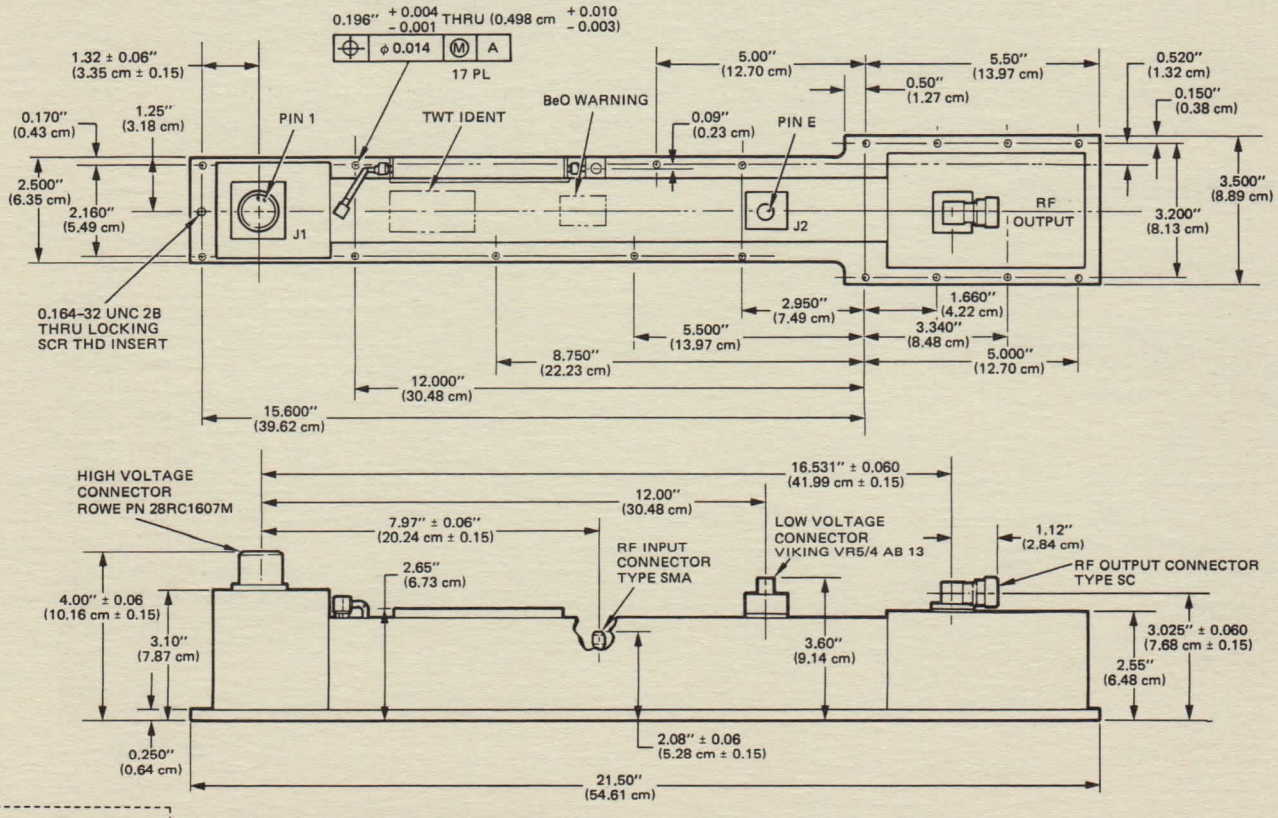

HUGHES ELECTRON DYNAMICS DIVISION 3100 West Lomita Boulevard, P. O. Box 2999, Torrance, California 90509, Tel (213) 517-6000

HUGHES AIRCRAFT COMPANY

Printed in USA 8/81 AL

HUGHES

HUGHES AIRCRAFT COMPANY

ELECTRON DYNAMICS DIVISION

8508H

1.0 kw 2.5-8.0 GHz PULSED TWT

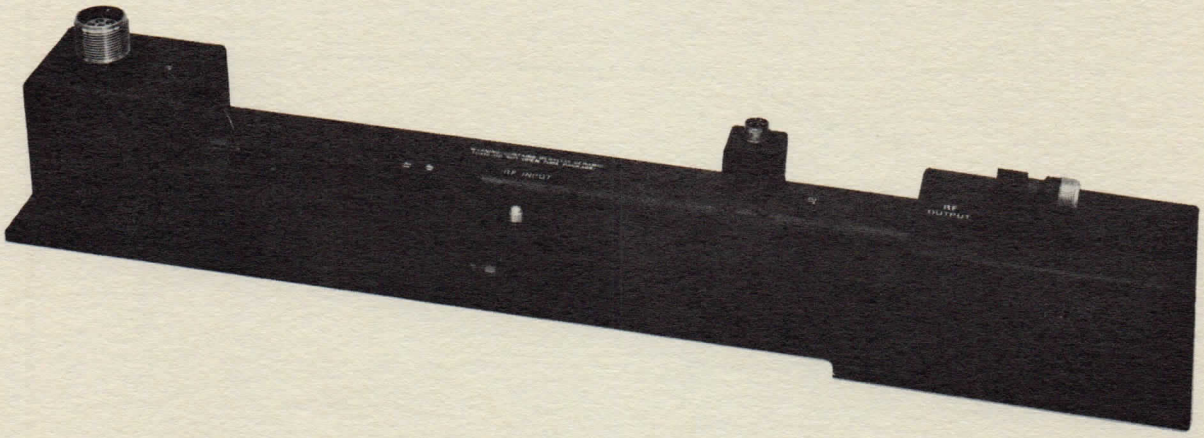

DESCRIPTION

The 8508H is a broadband, high gain, grid controlled pulsed TWT operating in the frequency range 2.5 to 8.0 GHz. Using PPM focusing, its pulsed output power is greater than 1.0 kw at 10% duty cycle. The rugged construction, utilizing conduction cooling, is well suited for operation in airborne military environments.

Note: All voltages, except grid, are with respect to the helix, which is grounded.

SPECIFICATIONS*

Frequency	2.5 – 8.0 GHz
Power Output	1.0 kw (minimum)
Duty	10%
Large Signal Gain (nominal)	45 dB
Beam Voltage	-9.6 kv
Beam Current	1.6 A
Grid Drive	125 V
Grid Bias	-200 V
Heater Voltage	6.3 V
Heater Current	4.8 A
Collector Voltage	multi-stage depressed
Weight	10.5 pounds (4.8 kg)
Length	21.5 inches (54.6 cm)
Cooling	conduction
RF Input Connector	SMA
RF Output Connector	SC
DC Voltage Connector	Rowe PN 28RC1607M
Environment	MIL-E-5400 Class 2
Cooling	conduction

*All specifications are subject to change without prior notice.

8508H

1.0 kw 2.5-8.0 GHz PULSED TWT

HUGHES
HUGHES AIRCRAFT COMPANY
ELECTRON DYNAMICS DIVISION

PERFORMANCE CURVE

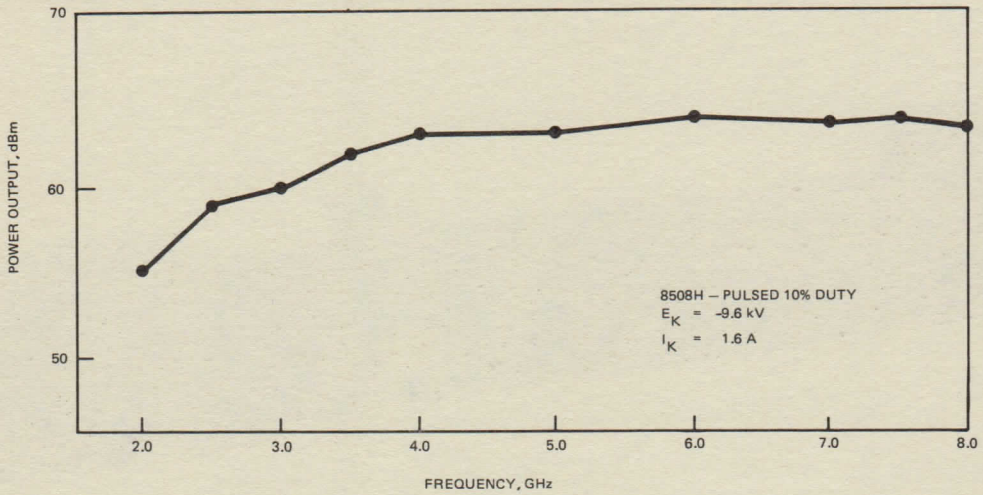

OUTLINE DRAWING

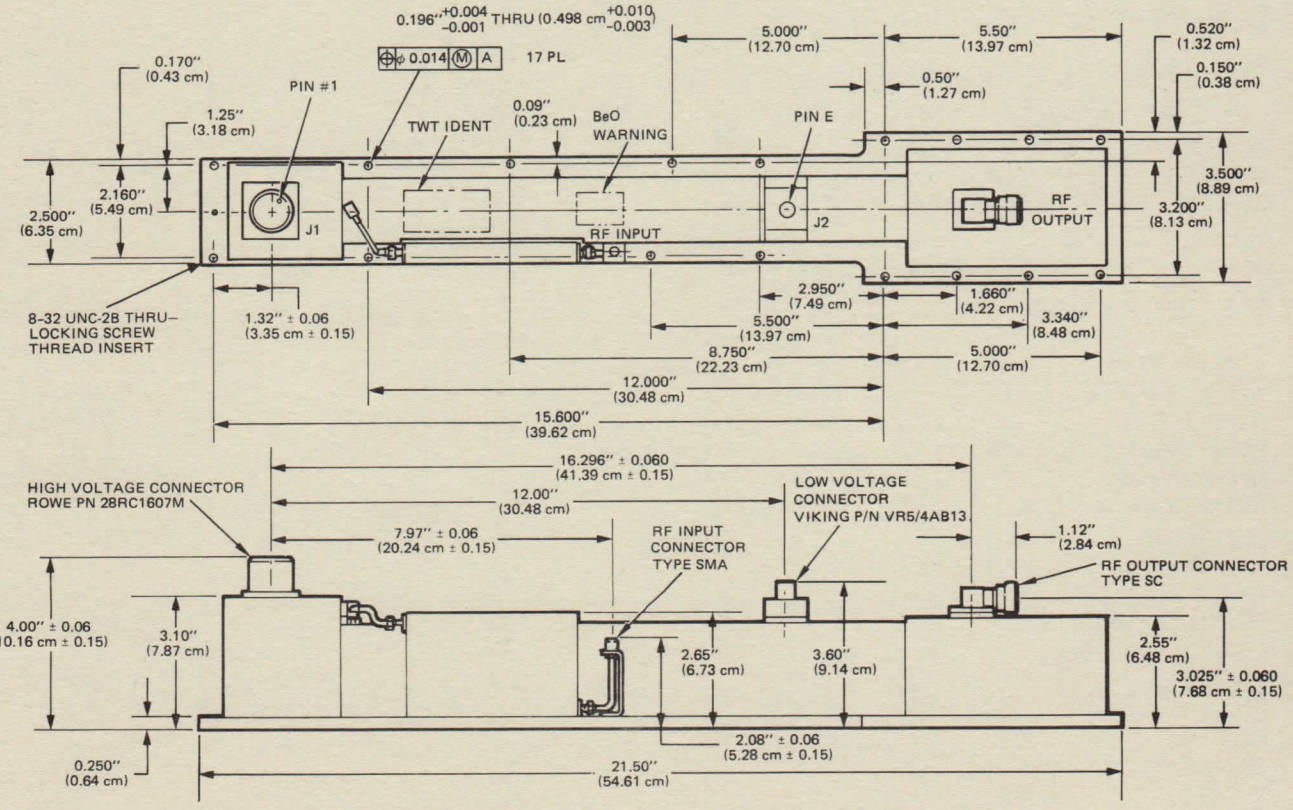

HUGHES
HUGHES AIRCRAFT COMPANY
ELECTRON DYNAMICS DIVISION 3100 West Lomita Boulevard, P. O. Box 2999, Torrance, California 90509, Tel (213) 517-6000

Printed in U.S.A. 8/81 AL

HUGHES

HUGHES AIRCRAFT COMPANY

ELECTRON DYNAMICS DIVISION

8702H

CW Tunable Klyston Amplifier

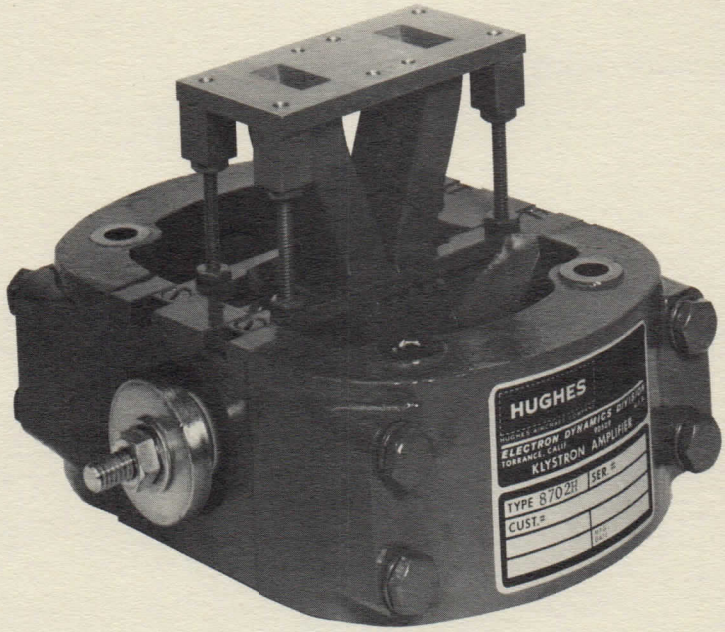

DESCRIPTION

The 8702H is a four-cavity, tunable klystron amplifier designed for commercial applications. Featuring permanent magnet focusing and conduction cooling, the 8702H provides CW output power in excess of 36 watts tunable over 300 MHz, from 12.65 to 12.95 GHz. The klystron utilizes metal-ceramic construction and an impregnated cathode for long-life under adverse operating conditions.

SPECIFICATIONS

Frequency	12.646 - 12.950 GHz
Duty	CW
RF Output Power	36 W minimum
RF Input Power	8 mW maximum
Small Signal Gain	41 dB minimum
1 dB Bandwidth	10 MHz minimum
0.2 dB Bandwidth	6 MHz minimum
RF Connectors	WR-75 waveguide (mates with)
Beam Voltage	−2 kVdc
Beam Current	100 mAdc maximum
Heater Voltage	6.3 V
Heater Current	1.5 A maximum
Weight	7-1/4 pounds

8702H

CW Tunable Klyston Amplifier

HUGHES

HUGHES AIRCRAFT COMPANY

ELECTRON DYNAMICS DIVISION

OUTLINE AND MOUNTING DRAWING

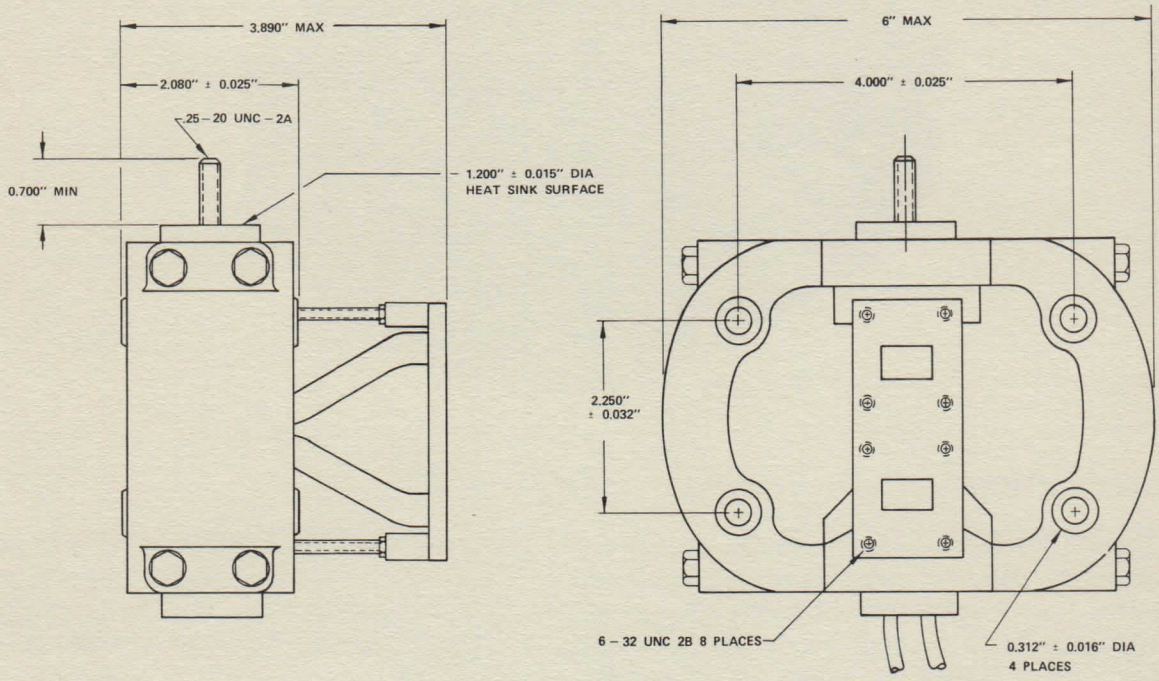

YOUR LOCAL REPRESENTATIVE

HUGHES ELECTRON DYNAMICS DIVISION 3100 West Lomita Boulevard, Torrance, California 90509, Tel (213) 534-2121

HUGHES AIRCRAFT COMPANY

Printed in U.S.A.—5-74

HUGHES

HUGHES AIRCRAFT COMPANY

ELECTRON DYNAMICS DIVISION

8707H

High Power Multipactor

TYPICAL APPLICATIONS:

- Receiver Front-End Protection
- RF Pulse Forming
- High Speed/High Power RF Switching

FEATURES:

- 250 kW Power Capability
- Over 35 dB Isolation
- Low Spike Energy
- Nanosecond Turn-on and Recovery
- Low Insertion Loss
- Wide Bandwidth
- First Pulse Firing Every Time
- High Duty Cycle Capability
- Low Flat Leakage Power
- Rugged Metal-Ceramic Construction

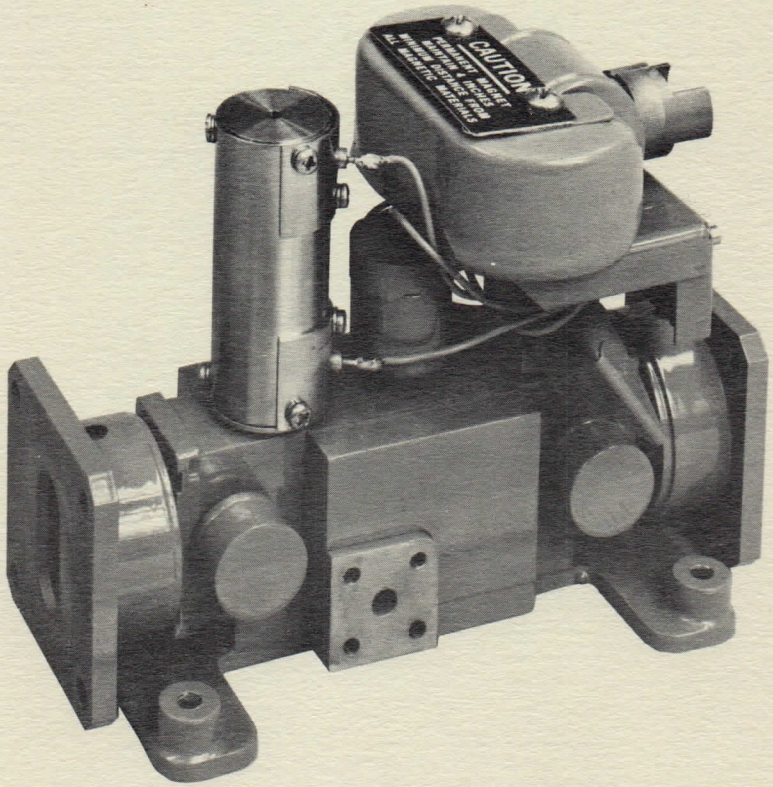

DESCRIPTION

The Hughes Model 8707H high power multipactor is a unique state-of-the-art device that provides receiver front-end protection with performance specifications unequalled in the industry. The word "multipactor" is derived from the principle of using electrons in a "controlled chain-reaction" to provide the necessary power limiting. The 8707H is designed for X-Band applications with other similar small, light-weight models obtainable.

THEORY OF OPERATION

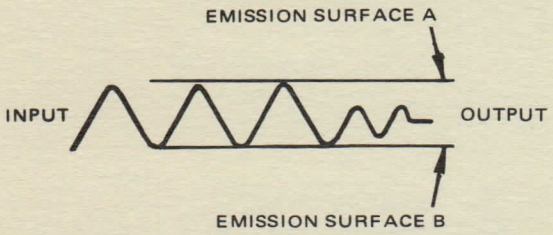

An electron cloud, provided by the 150 V electron source, is accelerated into the region between emission surface A & B. The peak electric field in the incident RF signal accelerates these electrons onto surface A (a secondary emitting surface capable of emitting 10 to 15 electrons for each incident electron). The secondary electrons emitted by surface A are accelerated onto surface B causing further multiplication of electrons. When electrons are accelerated by the field, they extract energy from the RF signal and release this energy (thermally) upon impacting on the surfaces. This heat is removed by conduction cooling. This electron multiplication-energy absorbing process continues until the power level in the RF signal has been attenuated to a maximum of 8 watts. Incident RF signals of 8 watts or less do not have sufficient electric field strength to initiate the multipacting process and are therefore transmitted with low attenuation (loss is typically on the order of 0.4 to 0.5 dB).

SPECIFICATIONS*

Frequency	X-Band**
Input Power	250 kW maximum peak†
	3 kW average†
Flat Leakage Power	8 W maximum
Low Level Insertion Loss	0.7 dB maximum
Duty	66% maximum†
VSWR	1.4:1 maximum
Spike Leakage Energy	0.2 erg maximum
Recovery Time	5.0 ns maximum
Beam Voltage	150 Vdc
Beam Current	100 µA typical
Oxygen Generator	
Filament Voltage	28 Vdc
Filament Current	1.0 A maximum
Electron Source	
Filament Voltage	4.0 Vdc
Filament Current	4.0 A maximum
Ion Pump Voltage	3 kVdc
Ion Pump Current	100 µA maximum
Coolant Type, Flow Rate and Pressure Drop	any cooling liquid at 0.3 gal/min at 5 psi maximum†
Weight	2.5 pounds maximum
Environment (design)	MIL-E-5400 Class 2

*Values are based on preliminary design and additional product refinement may be required for specific applications.

**Consult factory for other frequency model specifications.

† These parameters must be adjusted to meet actual system requirements.

TYPICAL PERFORMANCE CURVES

POWER OUTPUT VERSUS POWER INPUT

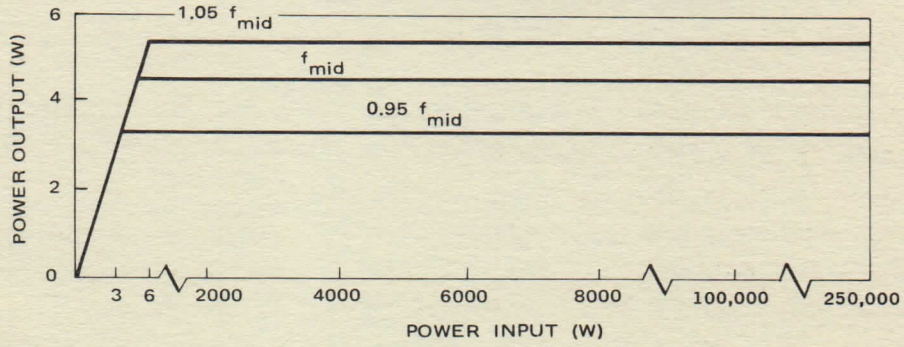

SIGNAL INSERTION LOSS VERSUS FREQUENCY

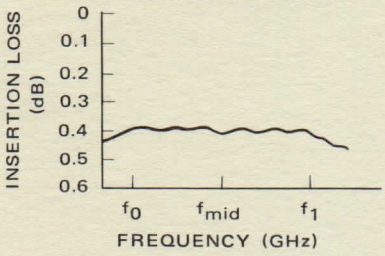

VSWR VERSUS FREQUENCY

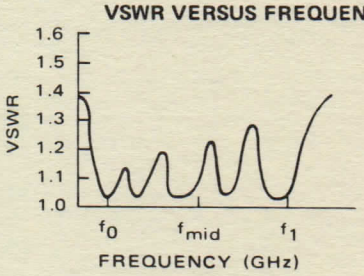

OUTLINE DRAWING (TYPICAL DIMENSIONS)

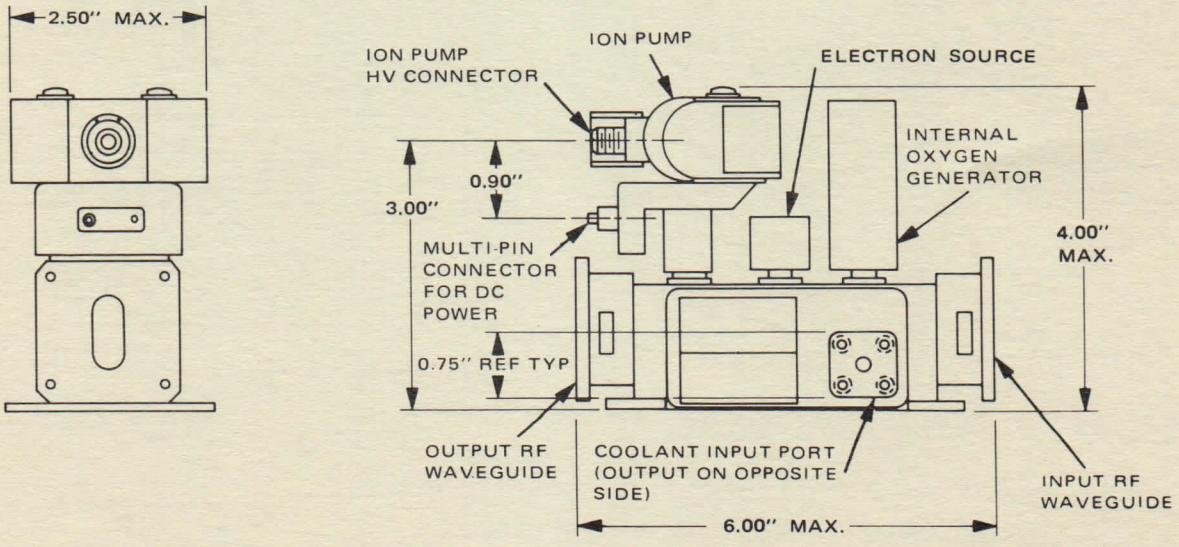

8707H

High Power Multipactor

HUGHES

HUGHES AIRCRAFT COMPANY

ELECTRON DYNAMICS DIVISION

TYPICAL APPLICATION

RECEIVER FRONT–END PROTECTION

Power from the transmitter passes through the circulator to the antenna. Due to impedance mismatch, approximately 10 percent of the transmitter power is reflected. The Multipactor attenuates this reflected RF power to a suitably low level (8 watts) so that the receiver will not be harmed or biased to a temporarily insensitive condition. When the radar echo returns from the target during receiver-on time, the Multipactor presents a path of minimum attenuation to the receiver.

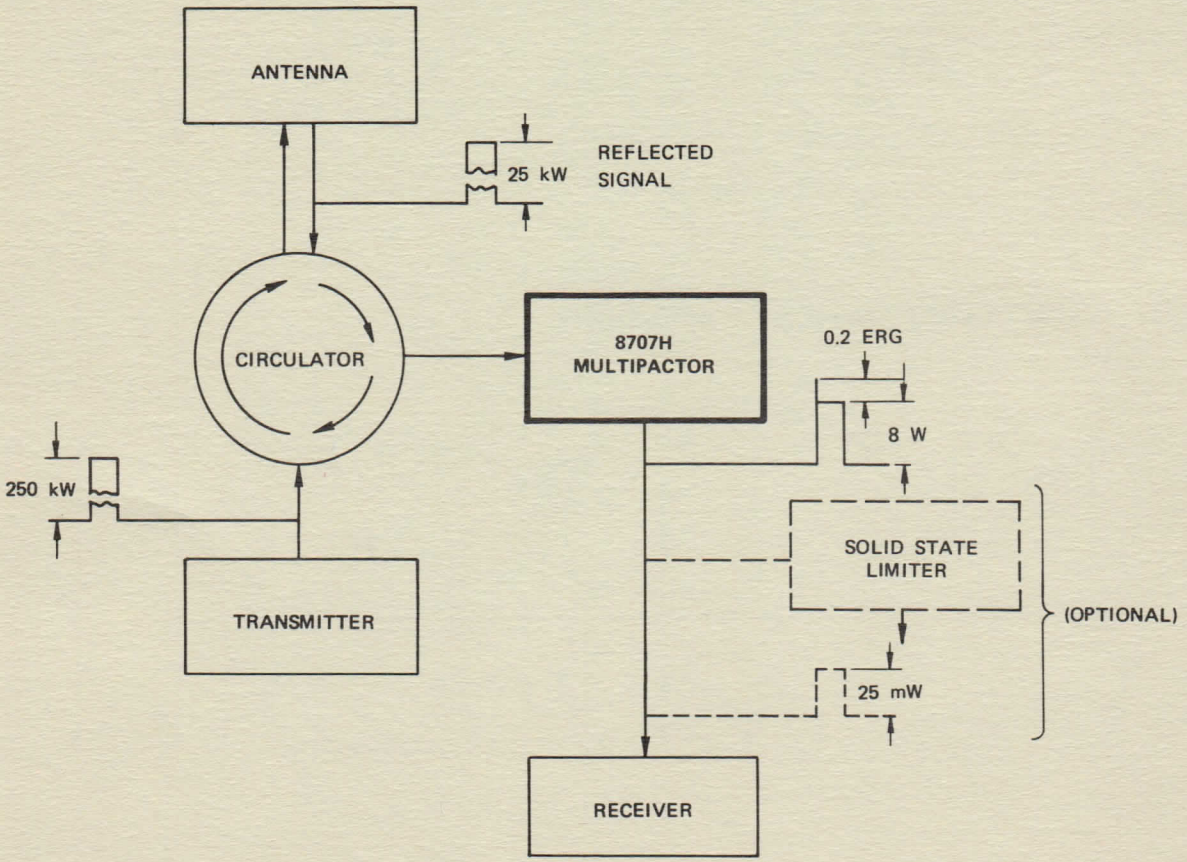

HUGHES ELECTRON DYNAMICS DIVISION 3100 West Lomita Boulevard, Torrance, California 90509, Tel (213) 534-2121

HUGHES AIRCRAFT COMPANY

Printed in U.S.A.—4-74

HUGHES

HUGHES AIRCRAFT COMPANY

ELECTRON DYNAMICS DIVISION

8713H

1.5 kW X-band CW TWT

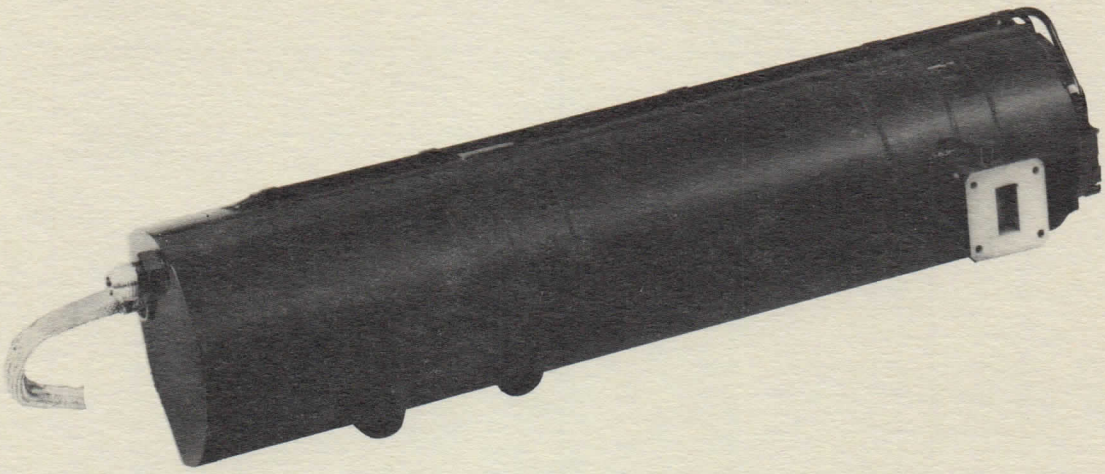

DESCRIPTION

The Hughes Model 8713H is a 1.5 kW X-band traveling-wave tube with 2.5 GHz bandwidth. It utilizes a rugged coupled-cavity circuit and anode modulation for long-life operation at any duty from 0 to 1.0. The tube also features the Hughes integral solenoid focusing and a depressed collector to minimize size, weight, and prime power. The tube is dielectric-oil cooled and is designed for MIL-E-5400, Class 2 environments.

SPECIFICATIONS*

Frequency	7.5 – 10.0 GHz
Power Output	1.5 kW minimum
Duty Cycle	CW
Modulation	anode
Saturated Gain	40 dB
Cathode Voltage	−10.0 kV nominal
Cathode Current	1.28 A nominal
Collector Voltage (with respect to cathode)	6.0 kV nominal
Collector Current	1.18 A nominal
Body Current	0.10 A nominal
Heater Voltage	12.8 V nominal
Heater Current	1.30 A nominal
Solenoid Voltage	48 V nominal
Solenoid Current	22 A nominal
Weight	54 pounds (24.49 kg)
Size	23.6 inches (59.94 cm)
Cooling	Coolanol 35 or equivalent
Environment	MIL-E-5400, Class 2

*Specifications are subject to change without notice.

8713H

1.5 kW X-band CW TWT

HUGHES

HUGHES AIRCRAFT COMPANY

ELECTRON DYNAMICS DIVISION

TYPICAL PERFORMANCE CURVE

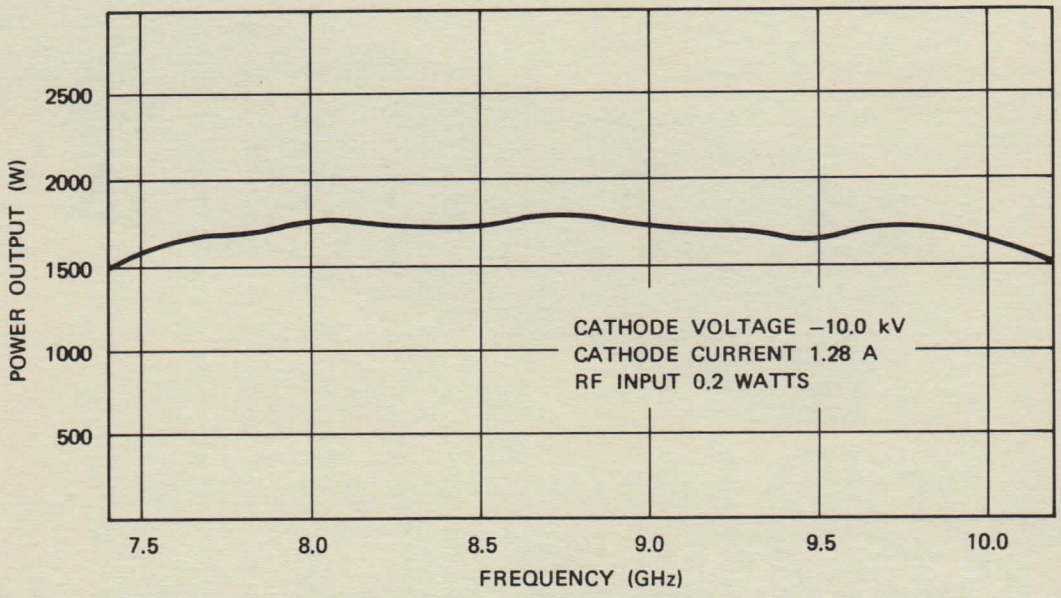

POWER OUTPUT WITH CONSTANT DRIVE

OUTLINE DRAWING

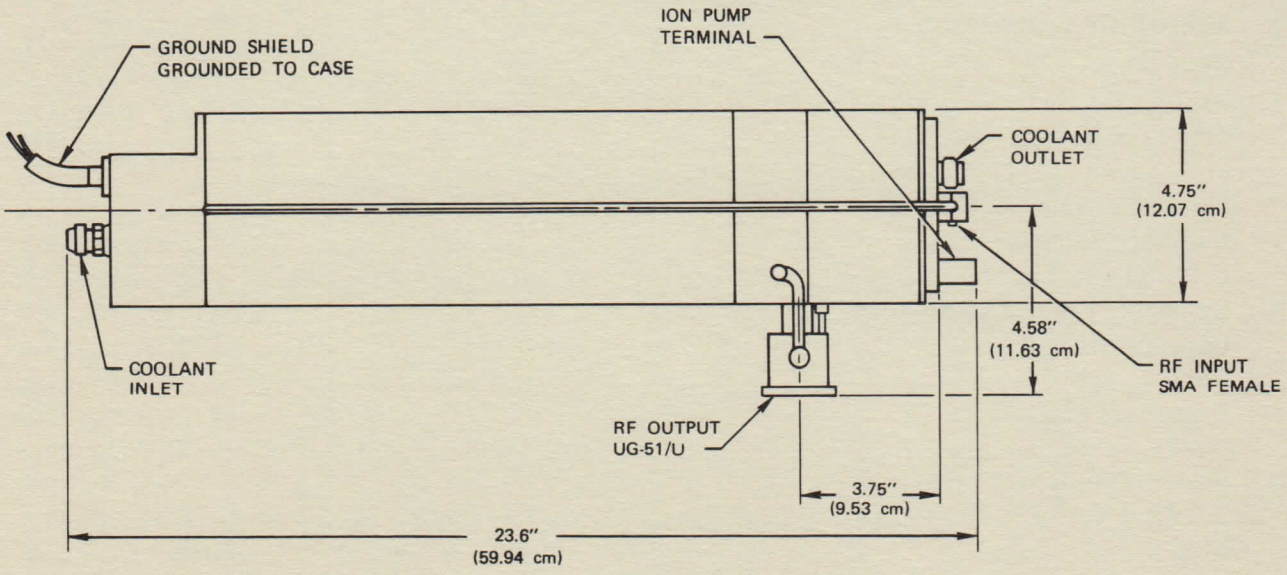

HUGHES ELECTRON DYNAMICS DIVISION
HUGHES AIRCRAFT COMPANY
3100 West Lomita Boulevard, P.O.Box 2999, Torrance, California 90509, Tel (213) 517-6000

Printed in U.S.A. 2/82 AL

HUGHES

HUGHES AIRCRAFT COMPANY

ELECTRON DYNAMICS DIVISION

8722H

1.5KW 8.0–18.0 GHz PULSED TWT

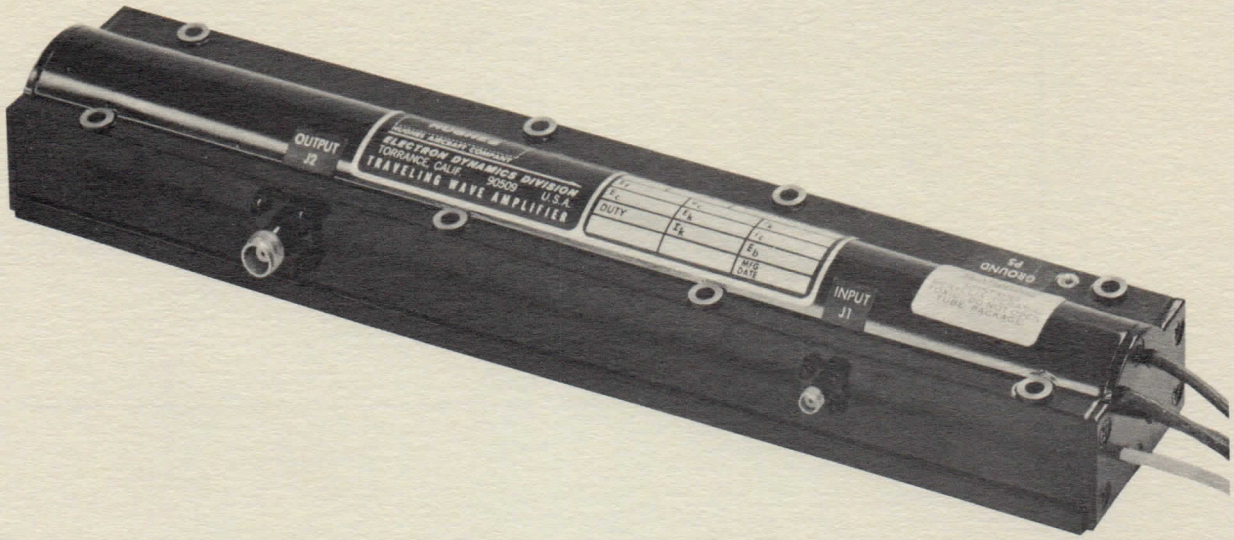

DESCRIPTION

The Hughes Model 8722H is a high gain, grid controlled traveling-wave tube operating in the frequency range of 8.0 to 18.0 GHz. Using periodic permanent magnet focusing, its peak power output is greater than one kilowatt at up to 8% duty, utilizing conduction cooling.

Its rugged construction, small size and light weight make it well suited for operation in airborne and missile environments. The tube is available in either grounded collector or depressed collector configurations.

NOTE: All voltages with respect to cathode

SPECIFICATIONS*

Frequency	8.0 – 18.0 GHz
Power Output	1.5 kW nominal, 1.0 kW minimum at band edges
Duty	8% nominal
Large Signal Gain (nominal)	45 dB
Beam Voltage	11.5 kV
Beam Current	1.7 A
Grid Drive	200 V
Grid Bias	-150 V
Heater Voltage	6.3 V
Heater Current	<3.0 A
Weight	5 pounds (2.28 kg)
Length	16 inches (40.64 cm)
Cooling	conduction
RF Input Connector	SMA
RF Output Connector	TNC
Environment	MIL-E-5400, Class II

*All specifications are subject to change without prior notice.

8722H

1.5KW 8.0–18.0 GHz PULSED TWT

HUGHES

HUGHES AIRCRAFT COMPANY

ELECTRON DYNAMICS DIVISION

TYPICAL PERFORMANCE CURVE

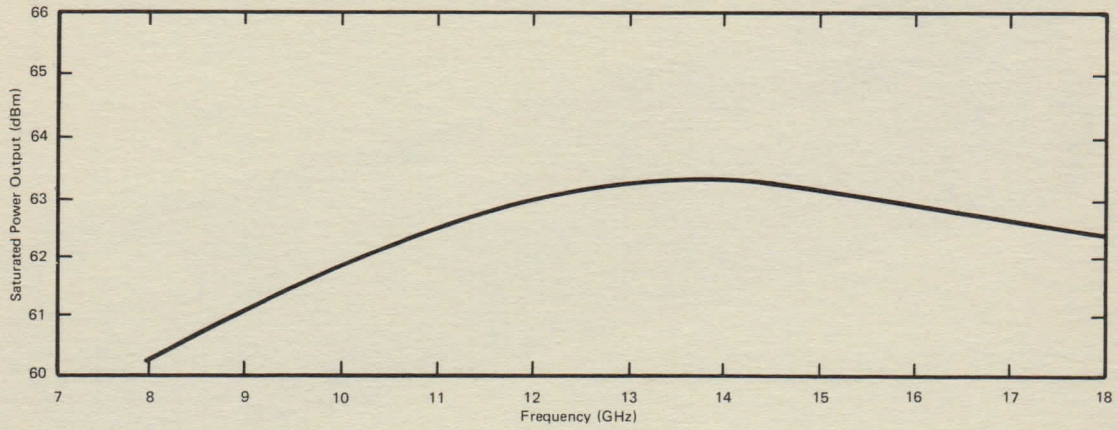

OUTLINE DRAWING

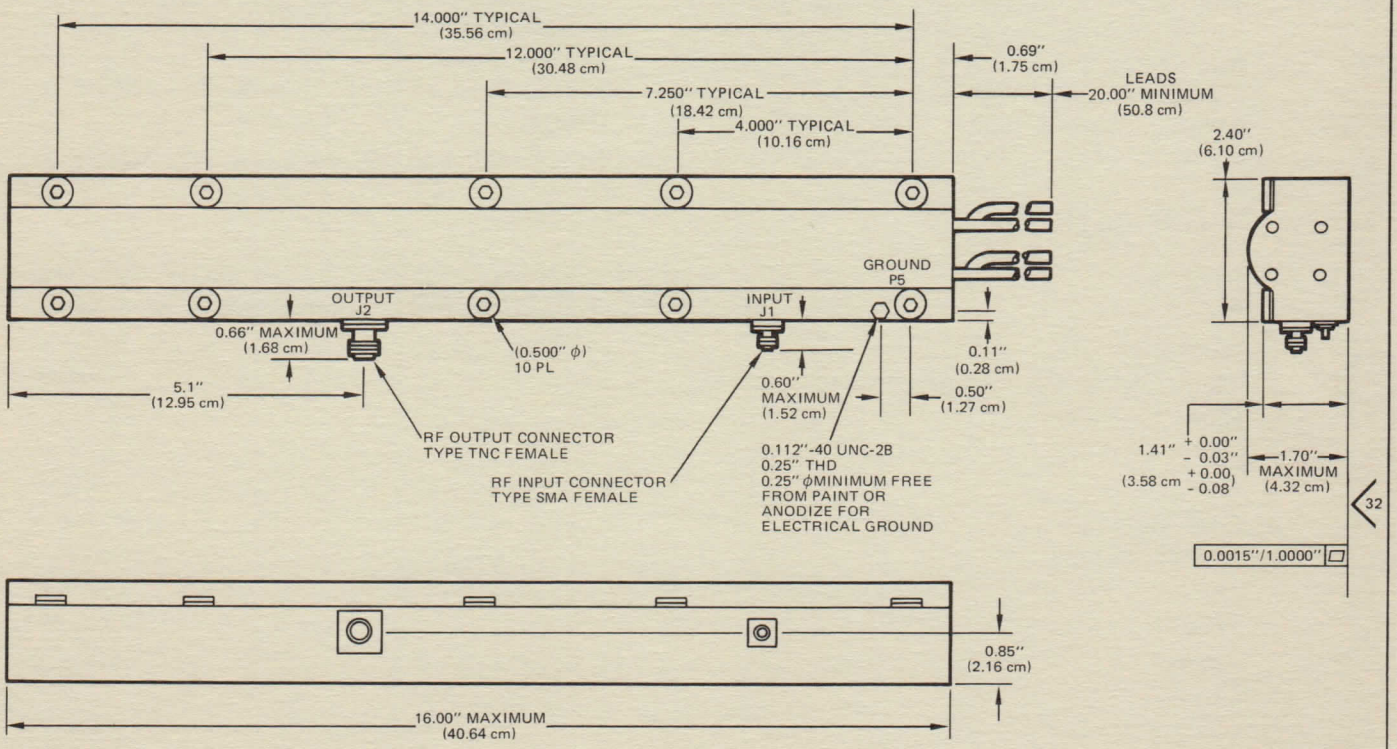

HUGHES ELECTRON DYNAMICS DIVISION 3100 West Lomita Boulevard, P.O. Box 2999, Torrance, California 90509, Tel (213) 534-2121

HUGHES AIRCRAFT COMPANY

Printed in U.S.A. 3/80 A/L

HUGHES

HUGHES AIRCRAFT COMPANY

ELECTRON DYNAMICS DIVISION

8742H

High Power Multipactor

TYPICAL APPLICATIONS

- Radar Receiver Front-End Protection

FEATURES

- 50 kW Power Capability
- Over 35 dB Isolation
- Low Spike Energy
- Nanosecond Turn-on and Recovery
- Low Insertion Loss
- Wide Bandwidth
- First Pulse Firing Every Time
- High Duty Cycle Capability
- Low Flat Leakage Power
- Rugged Metal-Ceramic Construction

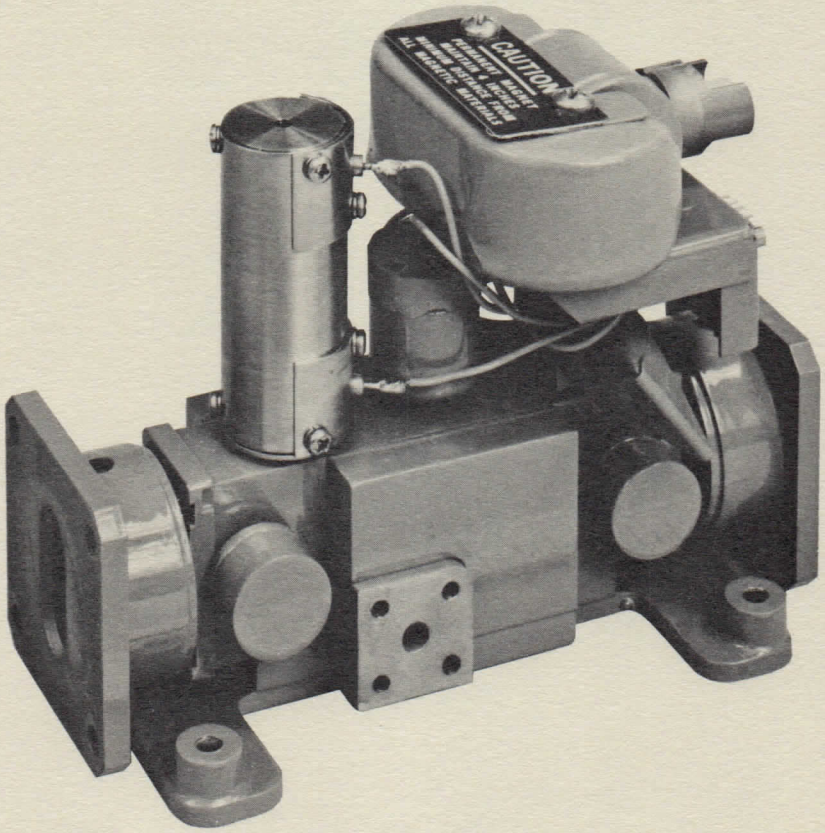

DESCRIPTION

The Hughes Model 8742H high power multipactor is a unique state-of-the-art device that provides receiver front-end protection with performance specifications unequaled in the industry. The word "multipactor" is derived from the principle of using electrons in a "controlled chain-reaction" to provide the necessary power limiting. The 8742H is designed for X-Band applications. Similar small, light-weight models are attainable.

THEORY OF OPERATION

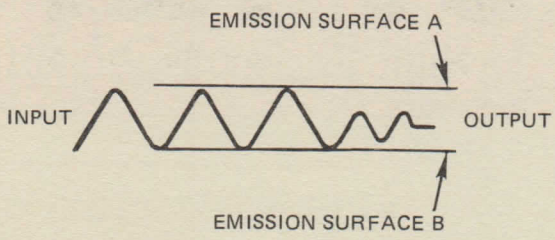

The high power RF input signal accelerates electrons onto surface A (a special surface emitting an order of magnitude of electrons for every electron striking its surface). These "free" electrons are accelerated by the electric field of the RF signal back onto surface B (same type surface as A). Another order-of-magnitude of electrons are freed and again accelerated back to surface A. When electrons are accelerated by the field, they extract energy from the RF signal and release this energy in the form of heat upon impacting a surface. (Heat is taken away from the surface by liquid cooling.) This back and forth multiplication – chain-reaction process continues until the power level in the RF signal is down to a maximum of 8 watts. RF signals of 8 watts or less do not have sufficient energy to start or continue the multipacting process (small insertion loss for low level input signals).

SPECIFICATIONS*

Frequency	9.0 – 10.2 GHz
Input Power	50 kW maximum peak
	500 W average
	3 kW average ①
Flat Leakage Power	8 W maximum
Low Level Insertion Loss	0.9 dB
Duty	50% maximum
VSWR	1.6:1 maximum
Spike Leakage Energy	0.2 erg maximum
Recovery Time	15.0 ns maximum
Beam Voltage	-150 Vdc
Beam Current	100 μA typical
Filament 1 Voltage	28 Vdc
Filament 1 Current	1.0 A maximum
Filament 2 Voltage	4.0 Vdc
Filament 2 Current	4.0 A maximum
Ion Pump Voltage	3 kVdc
Ion Pump Current	100 μA maximum
Coolant Type, Flow Rate and Pressure Drop	any cooling liquid at 0.4 gal/min. (0.03 liters/sec) at 5 psi (0.351 Kgs/sq. cm) maximum
Weight	2.5 pounds (1.13 Kgs) maximum
Environment (design)	MIL-E-5400 Class 2

① Applied in bursts of 5 seconds or less

* Specifications subject to change without prior notice

TYPICAL PERFORMANCE CURVES

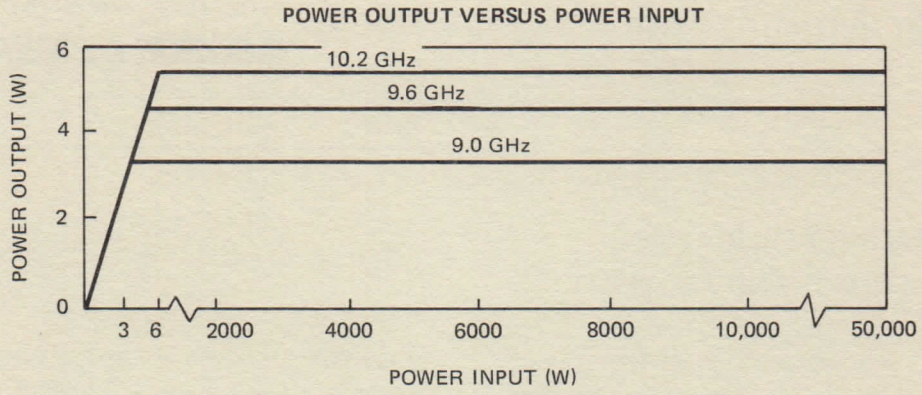

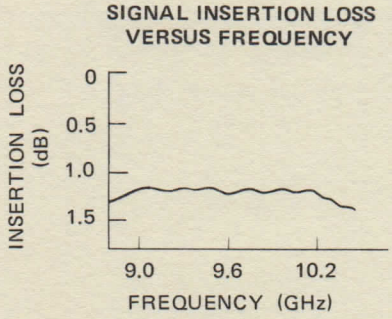

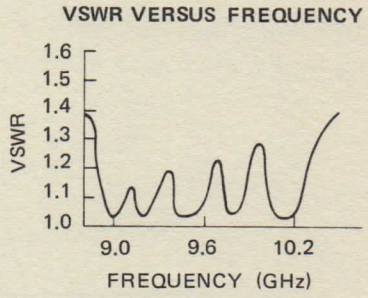

OUTLINE DRAWING

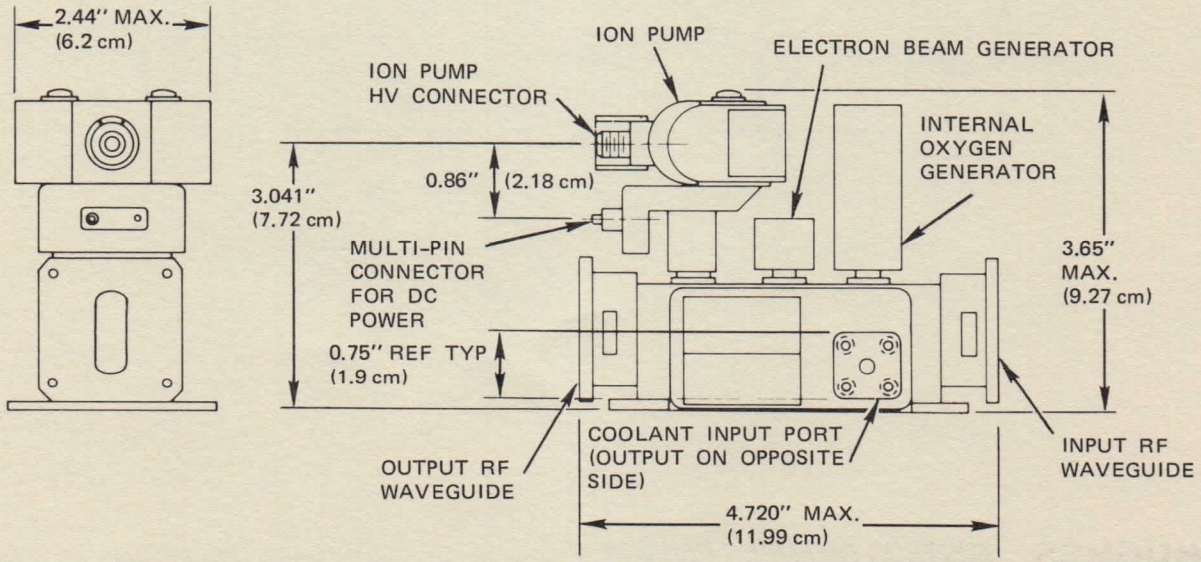

8742H
High Power Multipactor

HUGHES
HUGHES AIRCRAFT COMPANY
ELECTRON DYNAMICS DIVISION

TYPICAL RADAR APPLICATION
RECEIVER FRONT–END PROTECTION

Power from the transmitter passes through the circulator to the antenna. Due to impedance mismatch, approximately 10 percent of the transmitter power is reflected. The Multipactor attenuates this reflected RF power to a suitably low level (8 watts) so that the receiver will not be harmed or biased to a temporarily insensitive condition.

When the radar echo returns from the target during receiver on-time, the Multipactor presents a path of minimum attenuation to the receiver.

The multipactor also protects radar receivers from abnormal jumps in reflected power such as would occur during an antenna arc.

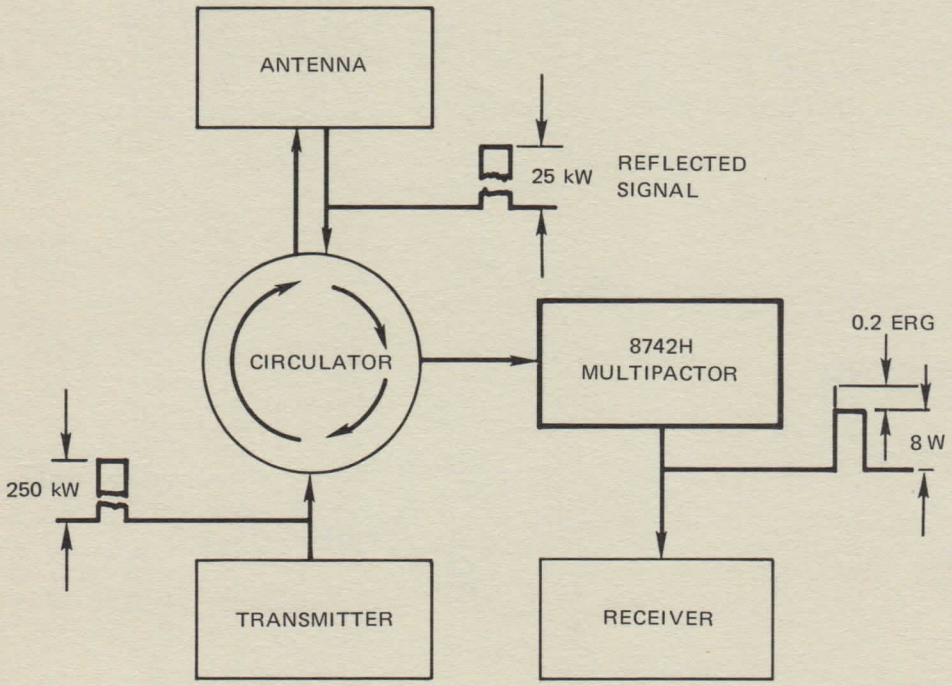

HUGHES
HUGHES AIRCRAFT COMPANY
ELECTRON DYNAMICS DIVISION 3100 West Lomita Boulevard, Torrance, California 90509, Tel (213) 534-2121

Printed in U.S.A. — 10/77

HUGHES

HUGHES AIRCRAFT COMPANY

ELECTRON DYNAMICS DIVISION

8754H

1.5KW 8.0–18.0 GHz PULSED TWT

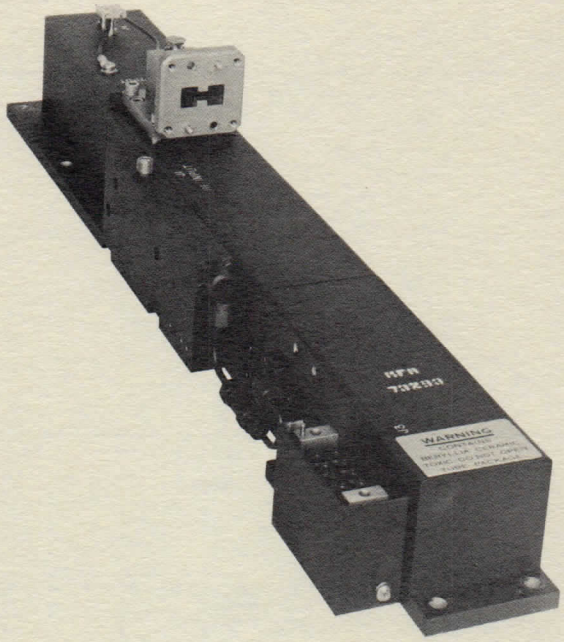

DESCRIPTION

The Hughes Model 8754H is a high gain, grid controlled traveling-wave tube operating in the frequency range of 8.0 to 18.0 GHz. Using periodic permanent magnet focusing, its peak power output is greater than one kilowatt at up to 8% duty, utilizing conduction cooling.

Its rugged construction, small size and light weight make it well suited for operation in airborne and missile environments. The tube is available in either grounded collector or depressed collector configurations.

NOTE: All voltages with respect to cathode

SPECIFICATIONS*

Frequency	8.0 – 18.0 GHz
Power Output	1.5 kW nominal, 1.0 kW minimum at band edges
Duty	8% nominal
Large Signal Gain (nominal)	45 dB
Beam Voltage	11.5 kV
Beam Current	1.7 A
Grid Drive	200 V
Grid Bias	-150 V
Heater Voltage	6.3 V
Heater Current	<3.0 A
Weight	5 pounds (2.28 kg)
Length	16 inches (40.64 cm)
Cooling	conduction
RF Input Connector	SMA
RF Output Connector	waveguide
Environment	MIL-E-5400, Class II

*All specifications are subject to change without prior notice.

8754H

1.5KW 8.0–18.0 GHz PULSED TWT

HUGHES

HUGHES AIRCRAFT COMPANY

ELECTRON DYNAMICS DIVISION

TYPICAL PERFORMANCE CURVE

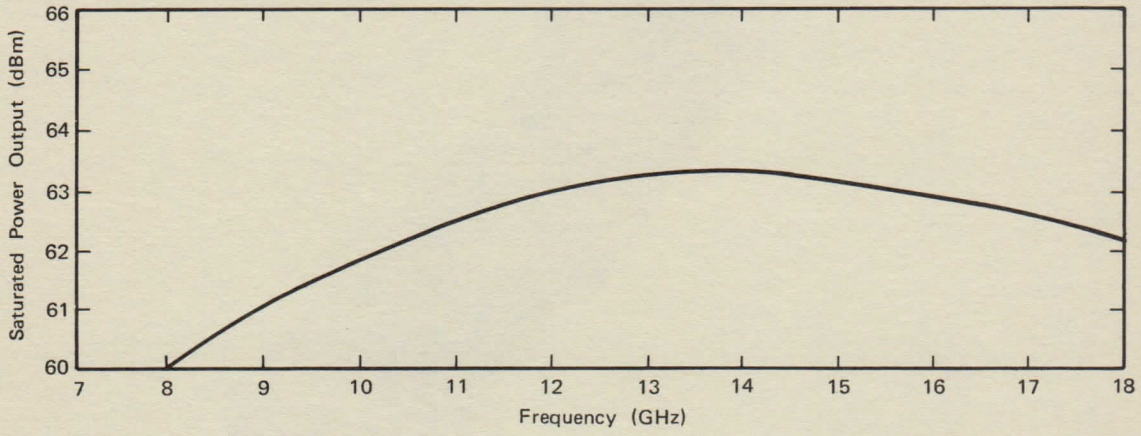

OUTLINE DRAWING

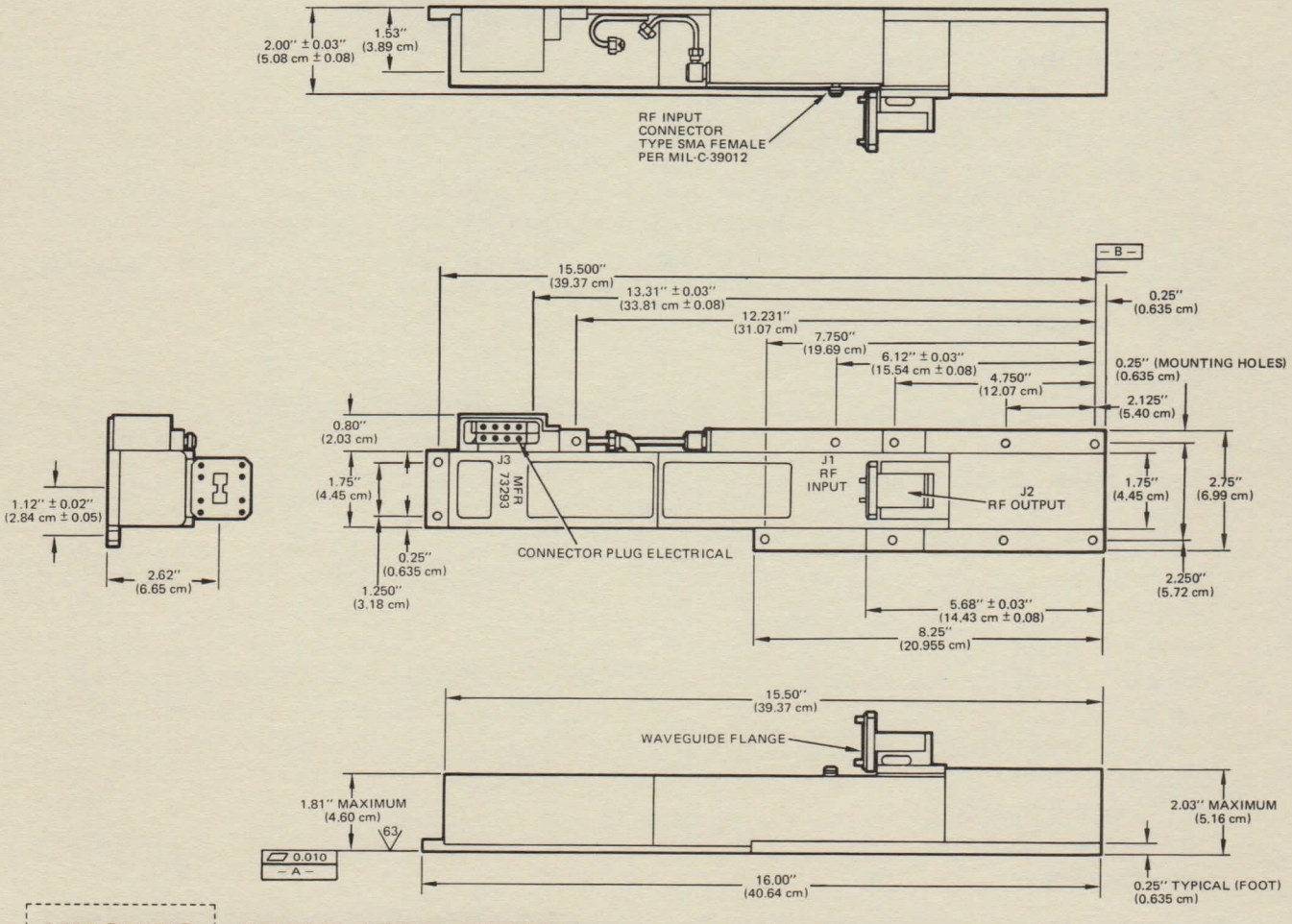

HUGHES ELECTRON DYNAMICS DIVISION 3100 West Lomita Boulevard, P.O. Box 2999, Torrance, California 90509, Tel (213) 534-2121

HUGHES AIRCRAFT COMPANY

Printed in U.S.A. 3/80 A/L

HUGHES

HUGHES AIRCRAFT COMPANY

ELECTRON DYNAMICS DIVISION

8760H

600 W/1200 W X-band TWT

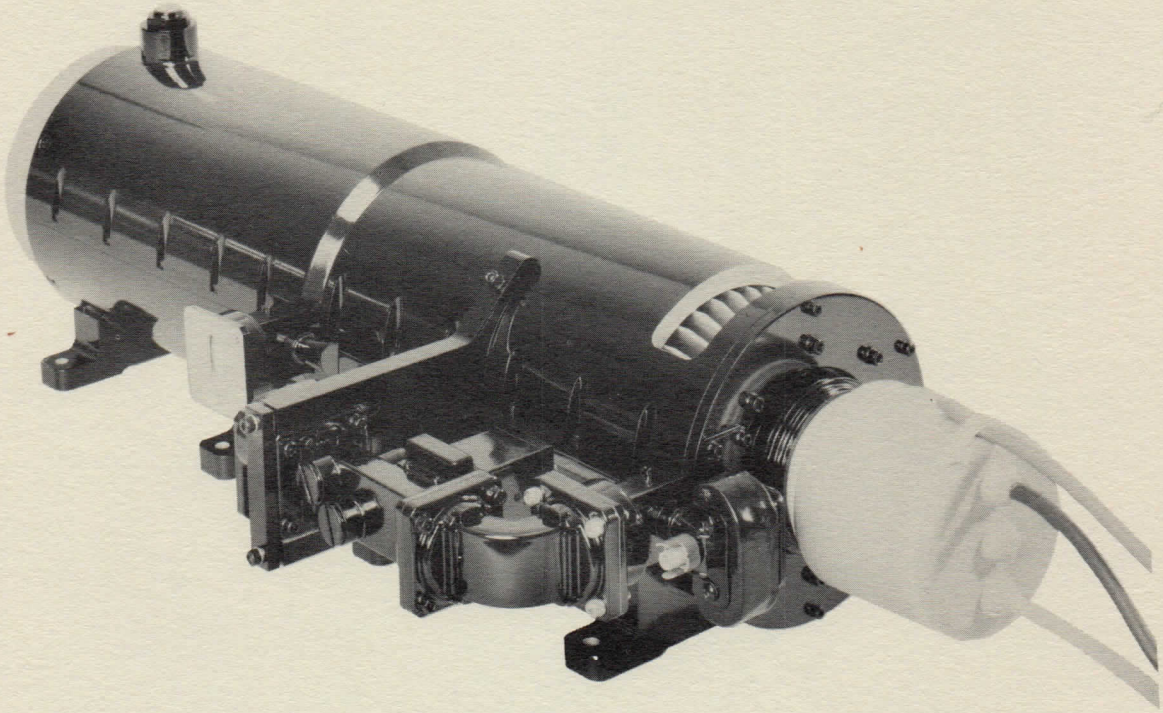

DESCRIPTION

The Hughes Model 8760H dual level X-band traveling-wave tube is an air-cooled PPM focused device capable of providing either 600 or 1200 watts of continuous RF power over the frequency range of 7.9 to 8.4 GHz. This tube, featuring low distortion characteristics, has been specifically designed to achieve optimized performance for communications ground terminal transmitter applications.

The 8760H operates at two levels of saturated performance by varying the voltage on an isolated anode, which changes the effective perveance of the electron gun.

Gain variations of less than 1.2 dB have been achieved across the 500 MHz band. Such performance has been achieved in both modes using special patented internal terminations.*

Air cooling enhanced by heat pipes on the RF circuit provides high reliability in a light weight package.

The 8760H can be optimized at any power level from 500 Watts to 1200 Watts.

*U.S. Patent Number 3,181,023

SPECIFICATIONS*†

	Low Power Mode	High Power Mode
RF CHARACTERISTICS		
Output Power	600 W minimum	1200 W minimum
Frequency	7.9 – 8.4 GHz	7.9 – 8.4 GHz
Saturated Gain	30 dB minimum	38 dB minimum
Rated Power Gain Variations	±0.20 dB/40 MHz ±0.38 dB/125 MHz	±0.20 dB/40 MHz ±0.35 dB/125 MHz
Small Signal Gain Variations	±0.5 dB/40 MHz ±0.65 dB/125 MHz	±0.2 dB/40 MHz ±0.35 dB/125 MHz
Rated Power Phase Linearity	4°/40 MHz 12°/125 MHz	4°/40 MHz 12°/125 MHz
Small Signal Phase Linearity	4.0^{o}/40 MHz 8°/125 MHz	4.0^{o}/40 MHz 8°/125 MHz
Cathode Amplitude Pushing	0.015 dB/V maximum	0.015 dB/V maximum
Anode Amplitude Pushing	0.005 dB/V maximum	0.005 dB/V maximum
Cathode Phase Pushing	0.5^{o}/V maximum	0.5^{o}/V maximum
Anode Phase Pushing	0.2^{o}/V maximum	0.2^{o}/V maximum
ELECTRICAL CHARACTERISTICS		
Cathode Voltage	–12.9 ± 1 kV	–13.0 ± 1 kV
Cathode Current	0.52 A maximum	0.72 A maximum
Anode Voltage	3.2 kV maximum	7.0 kV maximum
Body Current	50 mA maximum	50 mA maximum
Collector Voltage	–6.5 kV maximum	–5.5 kV maximum
Heater Voltage	7.5 V maximum	7.5 V maximum
Heater Current	3.5 A maximum	3.5 A maximum

MECHANICAL CHARACTERISTICS

Size	see outline drawing
Focusing	PPM
Cooling	air, 200 CFM at 3.5 in. H_2O
RF Input/Output	WR-112 waveguide

*All specifications are subject to change without prior notice.

†Tube equalized for high power mode. Can be equalized for either mode.

PERFORMANCE CURVES

NOTE: The following curves illustrate typical performance but should not be used for design limits without contacting Hughes Electron Dynamics Division.

HIGH POWER MODE – RATED OUTPUT POWER VERSUS FREQUENCY

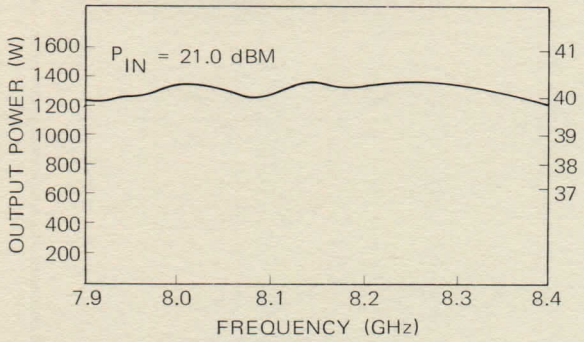

LOW POWER MODE – RATED OUTPUT POWER VERSUS FREQUENCY

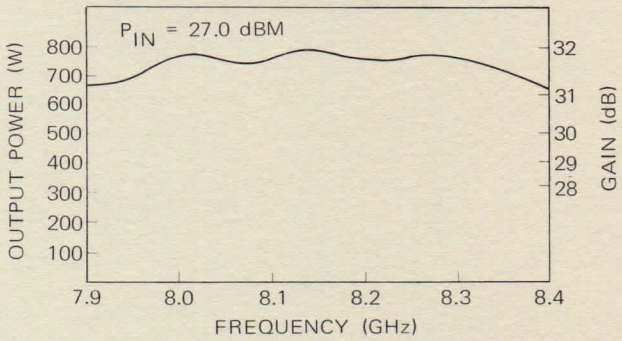

HIGH POWER MODE – SMALL SIGNAL VERSUS FREQUENCY

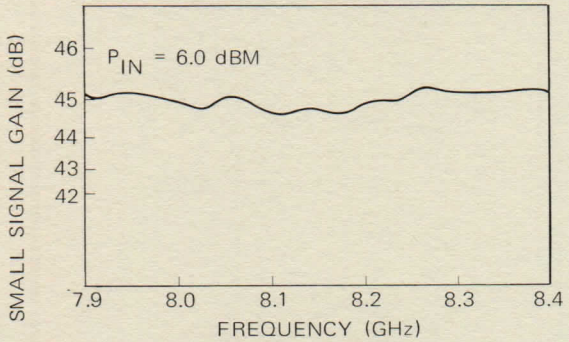

LOW POWER MODE – SMALL SIGNAL VERSUS FREQUENCY

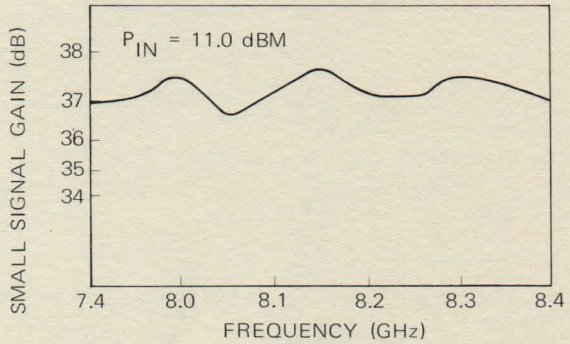

HIGH POWER MODE – PHASE LINEARITY AT 0 dB BELOW RATED POWER

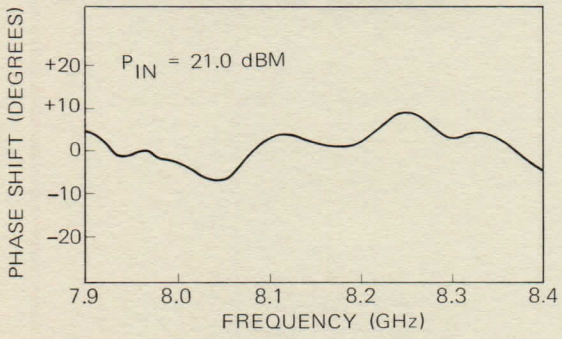

LOW POWER MODE – PHASE LINEARITY AT 0 dB BELOW RATED POWER

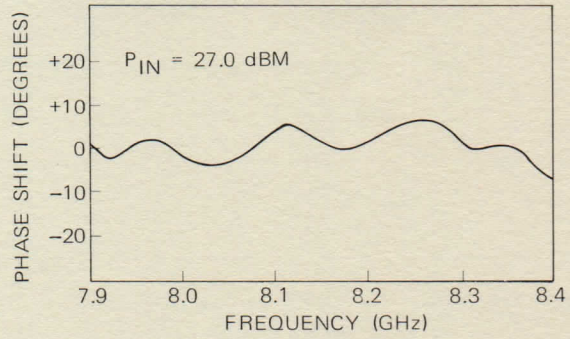

HIGH POWER MODE – PHASE LINEARITY AT 10 dB BELOW RATED POWER

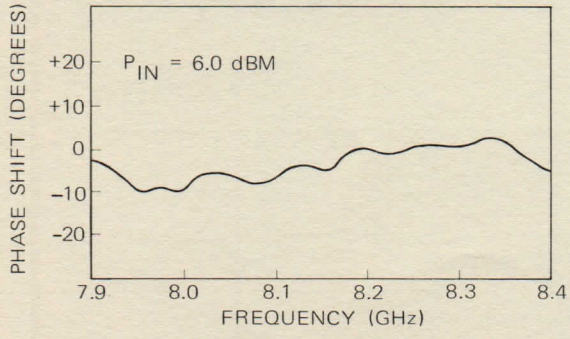

LOW POWER MODE – PHASE LINEARITY AT 10 dB BELOW RATED POWER

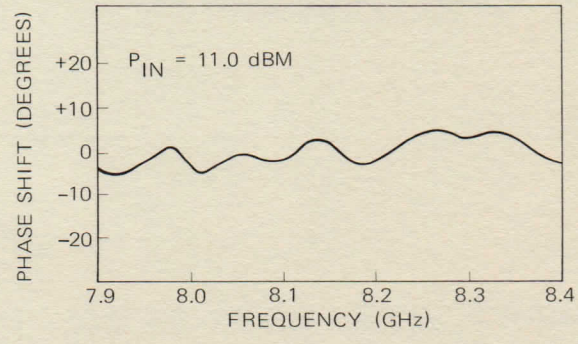

8760H

600 W/1200 W X-band TWT

HUGHES

HUGHES AIRCRAFT COMPANY

ELECTRON DYNAMICS DIVISION

OUTLINE DRAWING

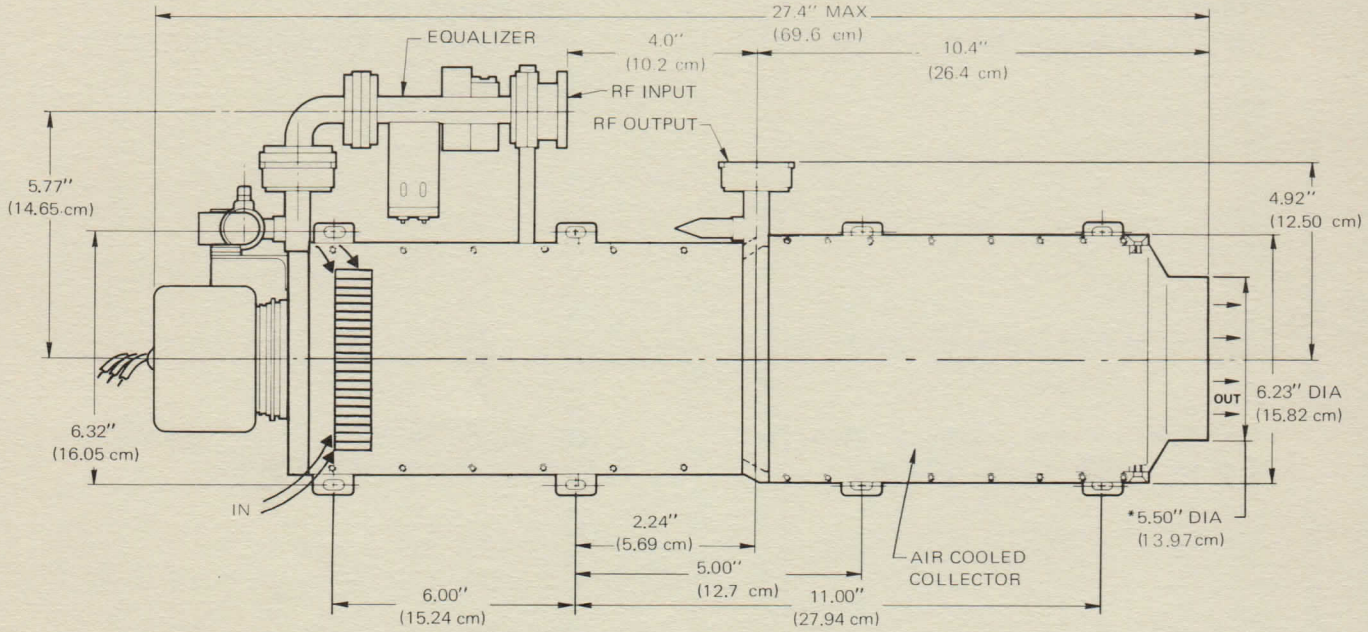

*Adjusted to fit fan.

HUGHES
HUGHES AIRCRAFT COMPANY
ELECTRON DYNAMICS DIVISION 3100 West Lomita Boulevard, Torrance, California 90509, Tel (213) 534-2121

Printed in U.S.A. 9—76

HUGHES

HUGHES AIRCRAFT COMPANY

ELECTRON DYNAMICS DIVISION

8774H

3.5 kw 9.5 – 10.0 GHz

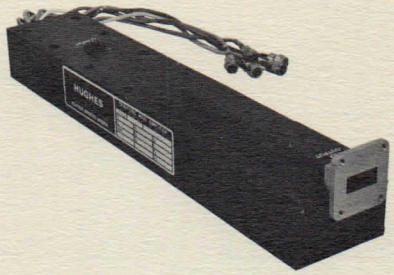

DESCRIPTION

The Hughes Model 8774H is a high gain, grid controlled traveling-wave tube operating in the airborne radar band 9.5 to 10.0 GHz. Using periodic permanent magnet focusing, its peak power is 3.5 kw at 6% duty. With two stages of depression, the collector provides efficient RF performance. It utilizes a rugged, conduction cooled package which is small and lightweight and makes it well suited for airborne radar applications.

SPECIFICATIONS*

Frequency	9.5 – 10.0 GHz
Power Output	3.5 kw peak
Duty Cycle	6%
Saturated Gain	45 dB
Cathode Voltage	-12 kV
Cathode Current	2.1 A
Helix Current (with RF drive)	0.50 A
(without RF drive)	0.25 A
Collector No. 1 Voltage (R.C.)	+8.0 kV
Collector No. 1 Current (with RF)	0.7 A
(without RF)	0.2 A
Collector No. 2 Voltage (R.C.)	+5.0 kV
Collector No. 2 Current (with RF)	0.75 A
(without RF)	1.50 A
Positive Grid Voltage	+200 V
Negative Grid Bias	-160 V
Grid Current	0.25 A
Heater Voltage (DC)	6.3 V
Heater Current (at typical heater voltage)	2.25 A
Length	15 inches (38.1 cm)
Weight	6.5 pounds (2.95 kg)
Input Collector	SMA female
Output Connector	WR-90
Cooling	conduction

*All specifications are subject to change without prior notice.

8774H

3.5 kw 9.5 – 10.0 GHz

HUGHES

HUGHES AIRCRAFT COMPANY

ELECTRON DYNAMICS DIVISION

OUTLINE DRAWING

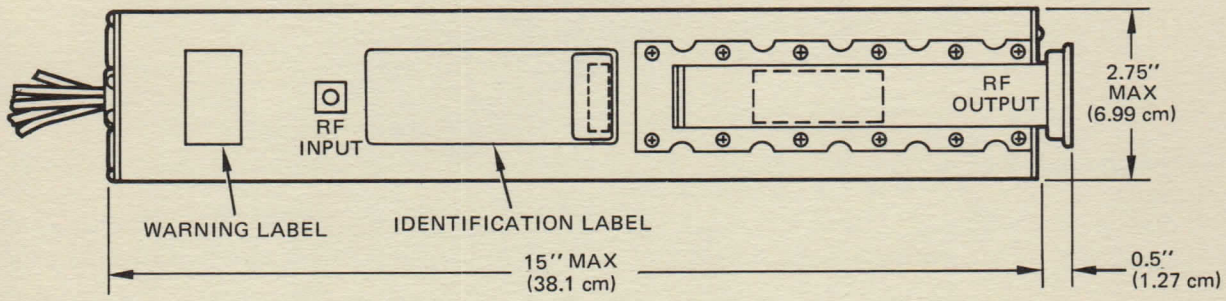

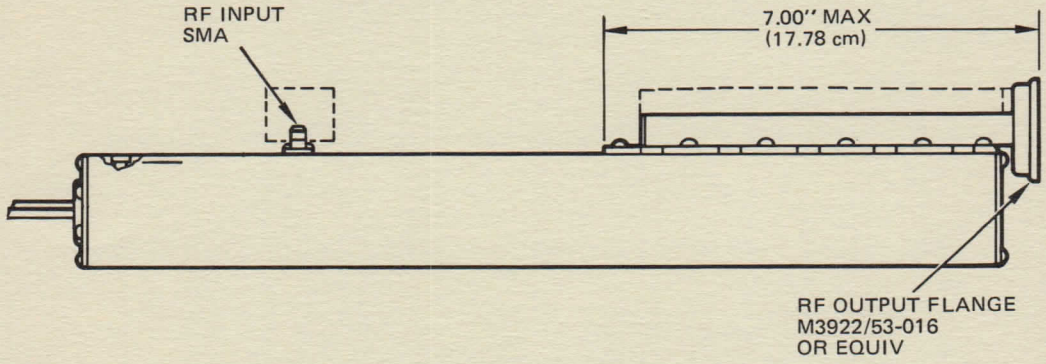

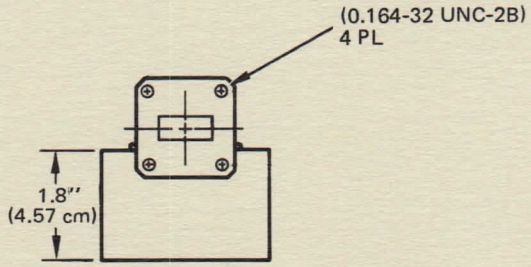

HUGHES ELECTRON DYNAMICS DIVISION 3100 West Lomita Boulevard, P.O. Box 2999, Torrance, California 90509, Tel (213) 517-6000

HUGHES AIRCRAFT COMPANY

Printed in U.S.A. 11/82 AL

HUGHES

HUGHES AIRCRAFT COMPANY

ELECTRON DYNAMICS DIVISION

1160H

2.5 kW pulsed TWT amplifier

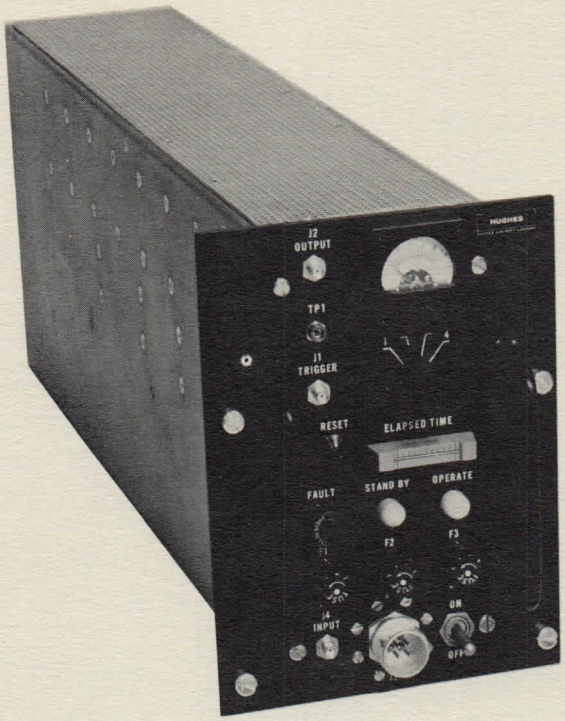

DESCRIPTION

The Hughes Model 1160H features a versatile, compact package containing two solid-state power supply modules, a magnetic modulator and two-stage RF amplifier section. The unit has a CW operated pre-driver traveling-wave tube and a cathode-pulsed high level traveling-wave tube driver. Applications include those for tactical radar.

SPECIFICATIONS

Radio Frequency	2900 – 3100 MHz
RF Power Input	0.25 mW
RF Power Output	2.5 kW
RF Gain	70 dB
Duty	0.0025 (in current application)
Power Input	115, 3ø, 400 cps, 1A
Cooling	conduction, maximum heat sink temperature 55°C
Pre-driver Tube Type	543H
Driver Tube Type	544H
Size	4 x 8 x 24 inches
Weight	28 pounds

1160H

2.5 kW pulsed TWT amplifier

HUGHES

HUGHES AIRCRAFT COMPANY

ELECTRON DYNAMICS DIVISION

BLOCK DIAGRAM

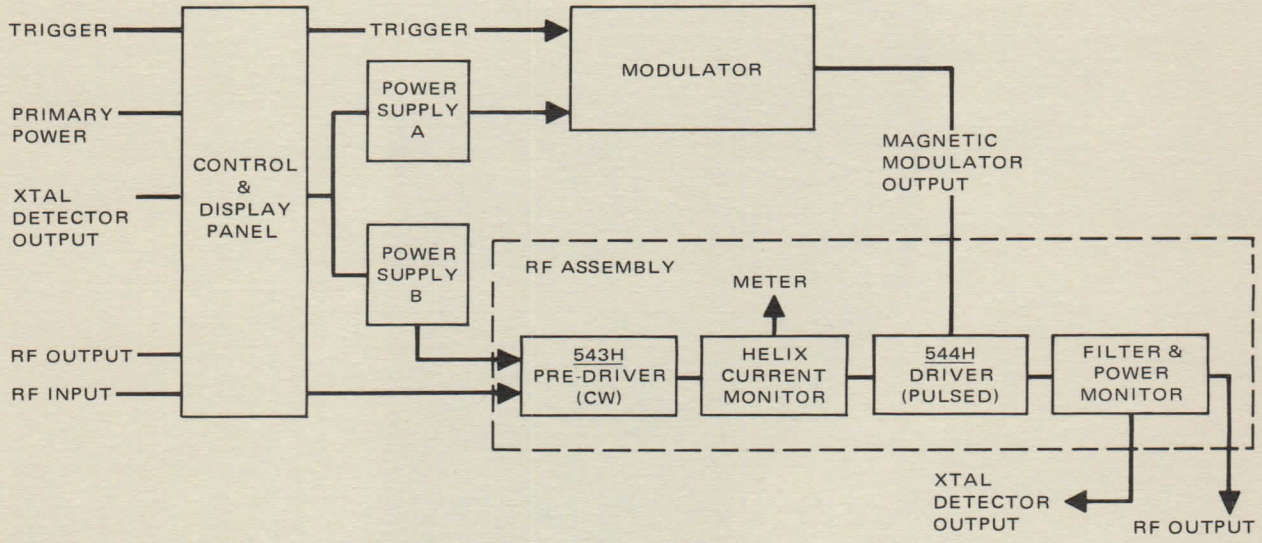

OUTLINE AND MOUNTING DRAWING

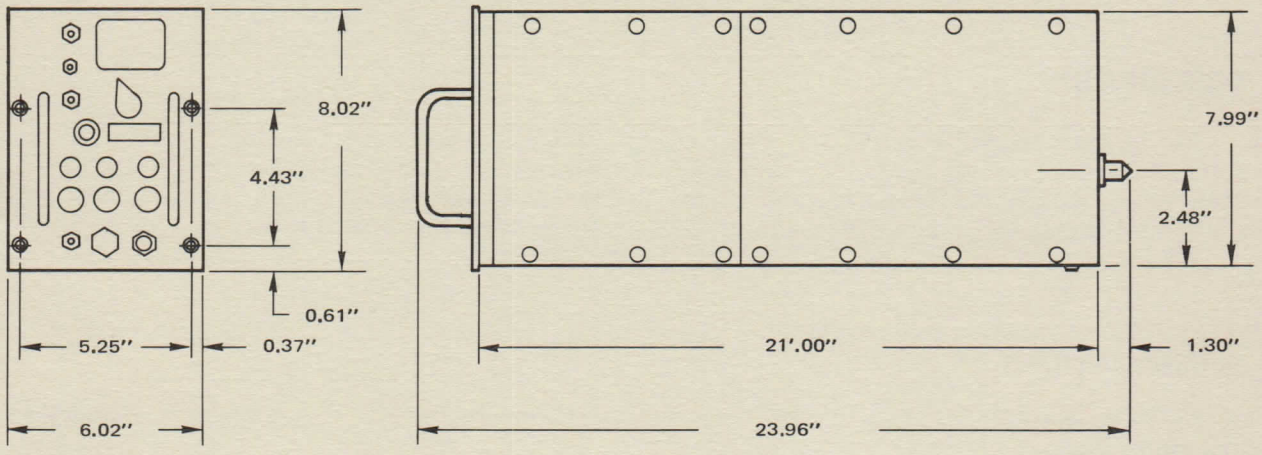

Specifications subject to change without notice.

YOUR LOCAL REPRESENTATIVE

HUGHES
HUGHES AIRCRAFT COMPANY

ELECTRON DYNAMICS DIVISION / 3100 W. LOMITA BLVD. TORRANCE, CA. 90509/TEL (213) 534-2121

Printed in U.S.A.–3-73

HUGHES

HUGHES AIRCRAFT COMPANY

ELECTRON DYNAMICS DIVISION

1190H

10-15W 2.2-2.3 GHz CW TWTA

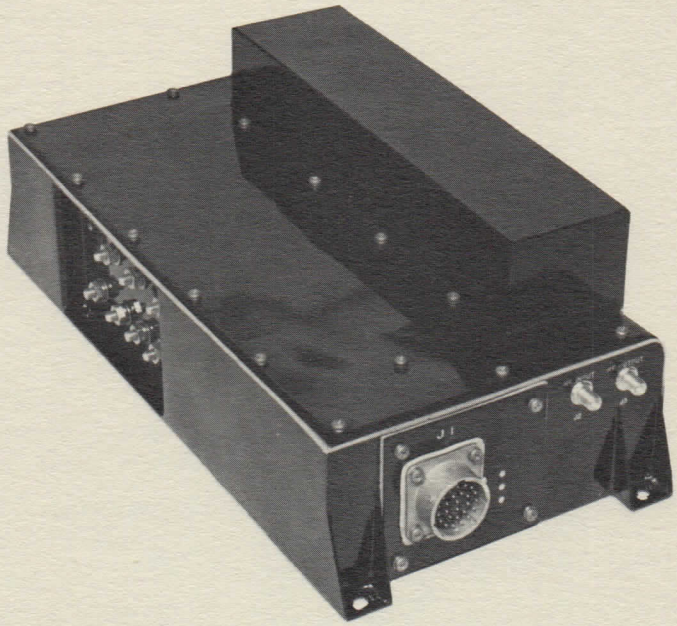

DESCRIPTION

The Hughes Model 1190H is a 10-15 watt S-band traveling-wave tube amplifier with or without band-pass filter (filter band-pass 2.2 to 2.3 GHz). The unit is qualified for space utilizing the Model 256H traveling-wave tube manufactured by the Hughes Electron Dynamics Division.

SPECIFICATIONS

Frequency (with Filter)	2.2 - 2.3 GHz
Power Output	10-15 W
Duty	CW
Gain (Saturated)	30 dB Minimum
Input Voltage	22-32 V dc
Input Power	60 W Maximum
Telemetry Outputs (0-5 V dc)	
Heater Voltage	
Helix Current	
Cathode Current	
Collector Voltage	
Collector Temperature	
Cooling	Conduction
Weight	8.5 Pounds Maximum
Size	11 x 6 x 4.2 Inches
Connectors	
RF	OSM
DC Input	Bendix (21-200216-26P)
Expected Life	5 Years Minimum

1190H

10-15W 2.2-2.3 GHz CW TWTA

HUGHES

HUGHES AIRCRAFT COMPANY

ELECTRON DYNAMICS DIVISION

PERFORMANCE CURVE

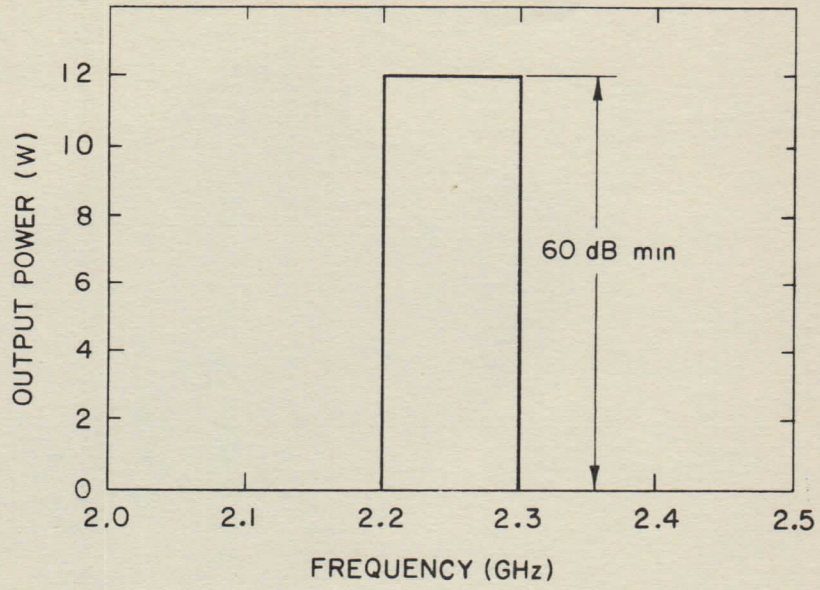

OUTLINE AND MOUNTING DRAWING

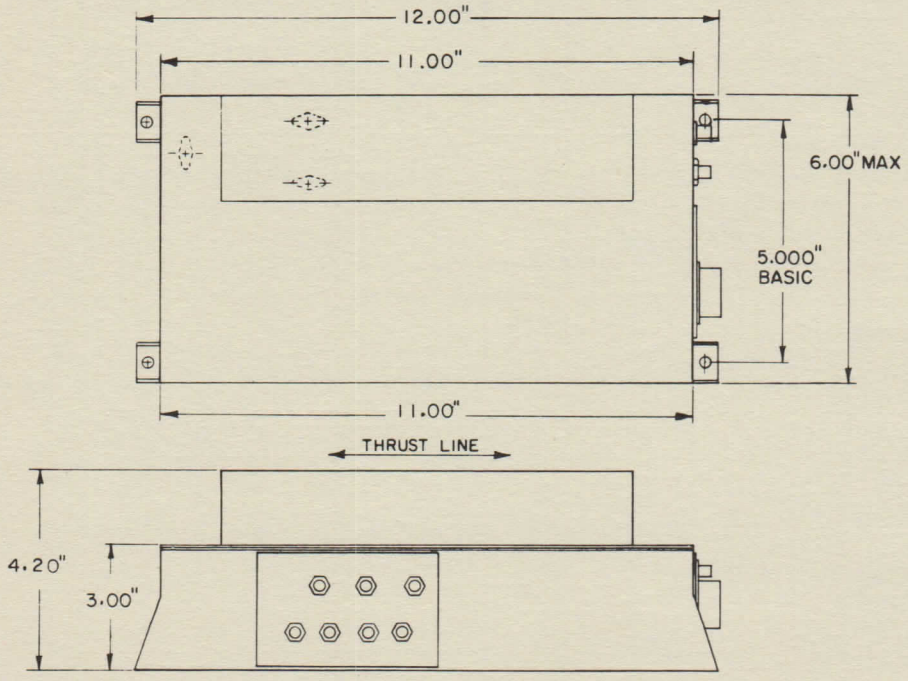

Specifications subject to change without notice.

HUGHES ELECTRON DYNAMICS DIVISION 3100 West Lomita Boulevard, Torrance, California 90509, Tel (213) 534-2121

HUGHES AIRCRAFT COMPANY

Printed in U.S.A.—11—71

HUGHES

HUGHES AIRCRAFT COMPANY

ELECTRON DYNAMICS DIVISION

1202H

22 W 7-9 GHz CW TWTA

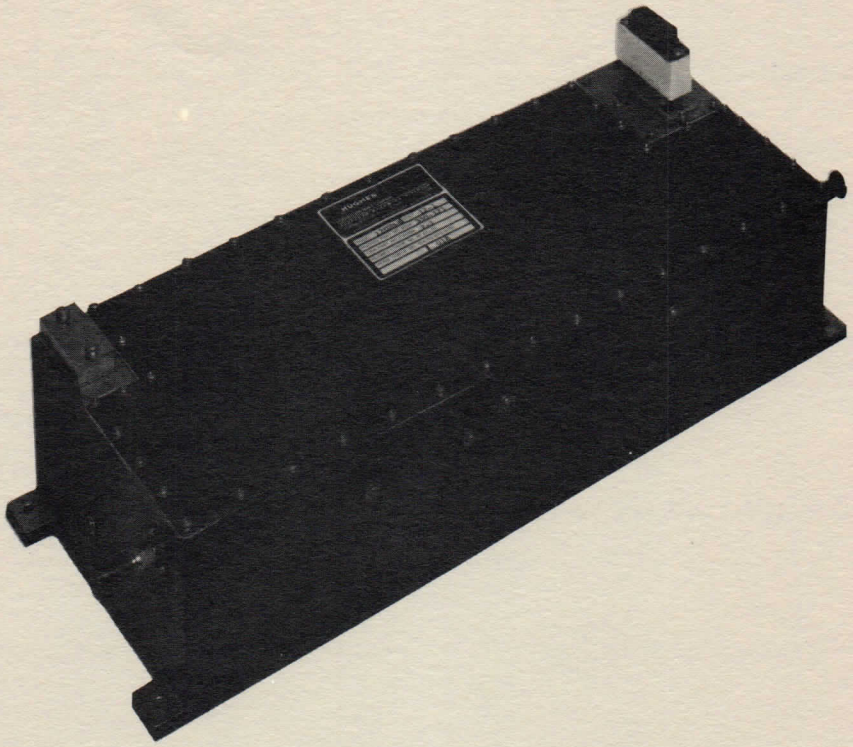

DESCRIPTION

The Hughes Model 1202H is a long life highly reliable space qualified TWTA developed for a military communication satellite utilizing the Hughes Model 265H TWT.

SPECIFICATIONS

Frequency	7–9 GHz
Power Output	22 W
Duty	CW
Gain (saturation)	46 dB
Input Voltage	23–33 Vdc
Input Power (at laboratory ambient)	98 W max.
Telemetry Outputs (0–5 Vdc)	
• Helix Current • Heater Voltage • Cathode to Helix Voltage • Input Current • Cathode Current	
Cooling	Conduction
Focusing	PPM
Weight	9.5 pounds
Size	12 x 5 x 3 inches
Connectors	
RF	3 MM
DC (power input)	DAMA-15P-NMB-2
(test)	DEMA-9P-NMB-2
Expected Life	> 100,000 hours

1202H

22 W 7-9 GHz CW TWTA

HUGHES

HUGHES AIRCRAFT COMPANY

ELECTRON DYNAMICS DIVISION

PERFORMANCE CURVE

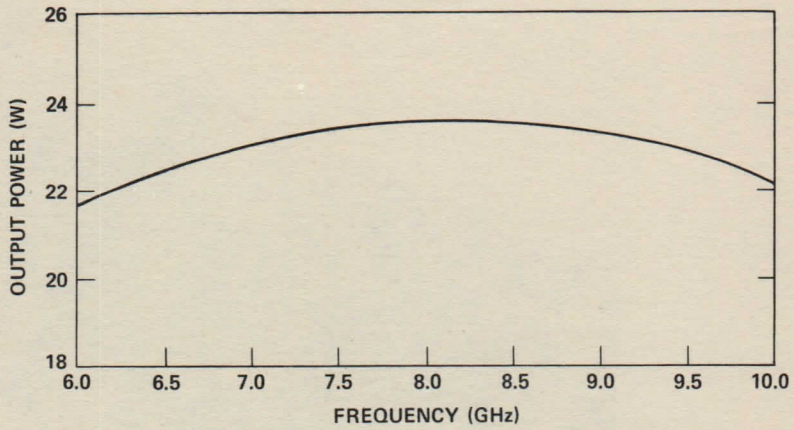

OUTLINE AND MOUNTING DRAWING

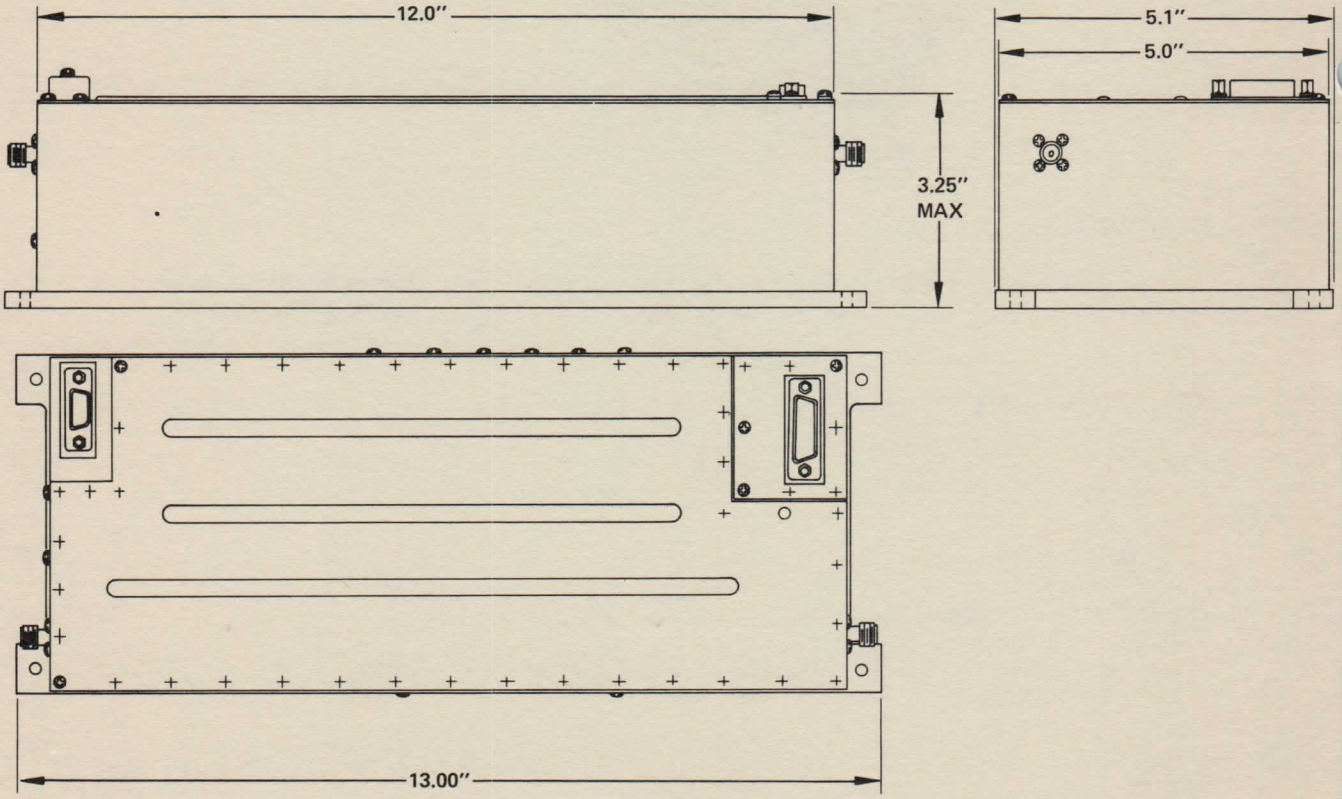

HUGHES
HUGHES AIRCRAFT COMPANY
ELECTRON DYNAMICS DIVISION 3100 West Lomita Boulevard, Torrance, California 90509, Tel (213) 534-2121

Printed in U.S.A. –7–72

HUGHES

HUGHES AIRCRAFT COMPANY

ELECTRON DYNAMICS DIVISION

1220H

20 W 13.5-14.5 GHz CW TWTA

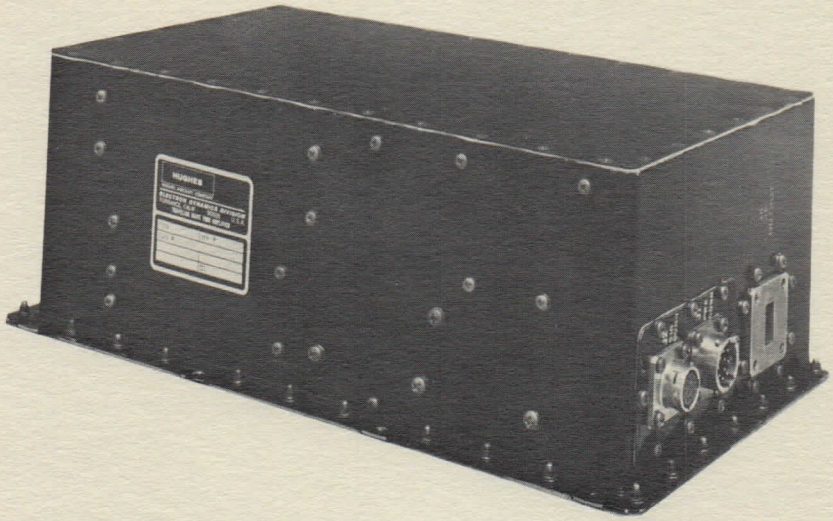

DESCRIPTION

The Hughes model 1220H is a space-qualified traveling-wave tube amplifier developed for the Skylab program. This amplifier will be used in the passive microwave and radar system to study the earth from space. It will be operated in a pulsed application and utilizes the Hughes model 851H traveling-wave tube.

SPECIFICATIONS

Frequency	13.5—14.0 GHz
Power Output	20 W
Duty	CW
Gain (saturation)	53 dB
Input Voltage	28 V +2/-4
Input Power (at laboratory ambient)	140 W
Cooling	conduction
Weight	10.0 pounds
Size	11.8 x 6.6 x 4.4 inches
Connectors	
RF	UG1665/U mates with UG419/U
DC (power input)	JTN02RE-12-9 Bendix
DC (test)	JTN02RE-10-35S Bendix
Telemetry Outputs (0-5 V)	
Helix Current	
Helix Voltage	
Helix Temperature	
Heater Voltage	
Collector Current	

1220H

20 W 13.5-14.5 GHz CW TWTA

HUGHES

HUGHES AIRCRAFT COMPANY

ELECTRON DYNAMICS DIVISION

PERFORMANCE CURVE

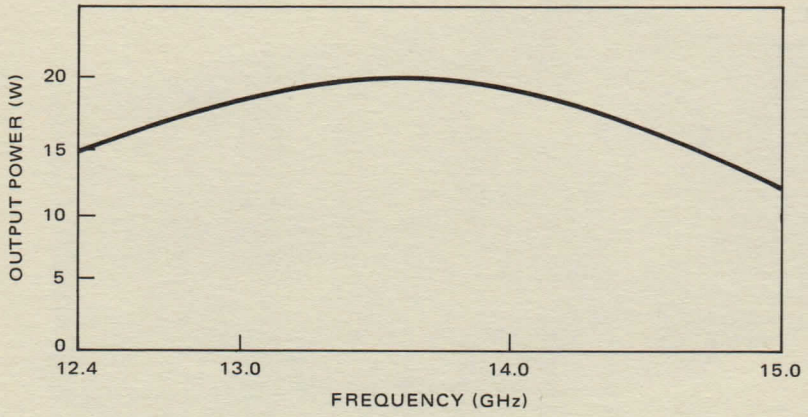

OUTLINE AND MOUNTING DRAWING

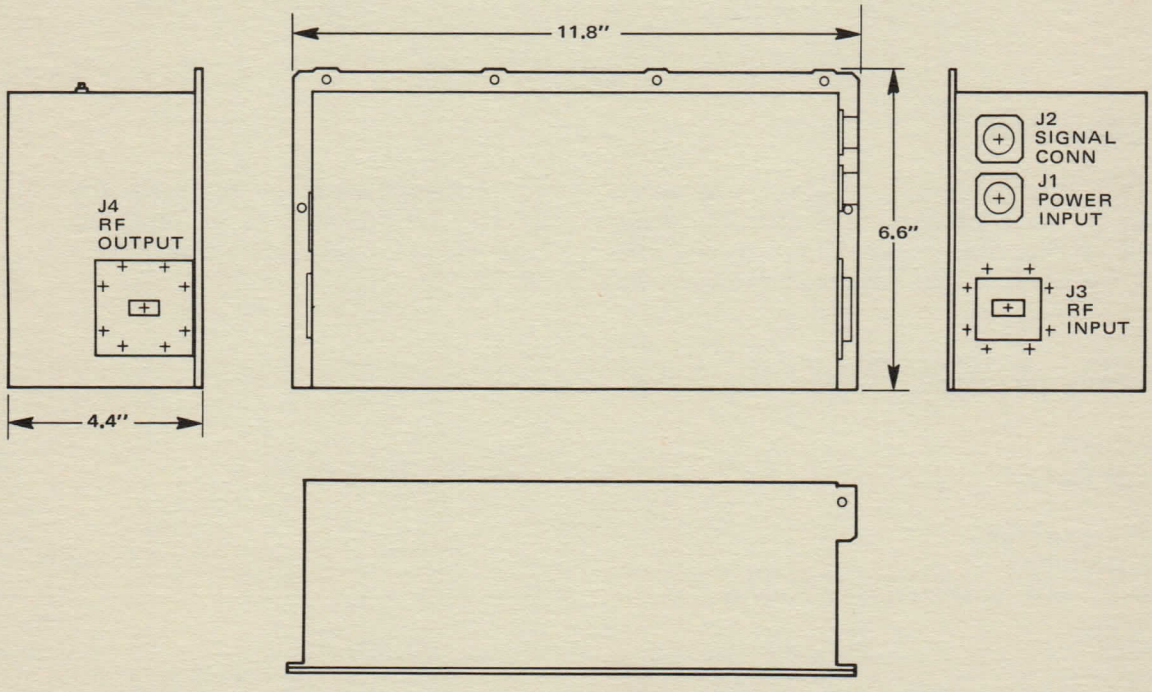

YOUR LOCAL REPRESENTATIVE

HUGHES
HUGHES AIRCRAFT COMPANY

ELECTRON DYNAMICS DIVISION / 3100 W. LOMITA BLVD. TORRANCE, CA. 90509/TEL (213) 534-2121

Printed in U.S.A.–3-73

HUGHES

HUGHES AIRCRAFT COMPANY

ELECTRON DYNAMICS DIVISION

1230H

14 W Ku-Band 14.3–15.3 GHz TWTA

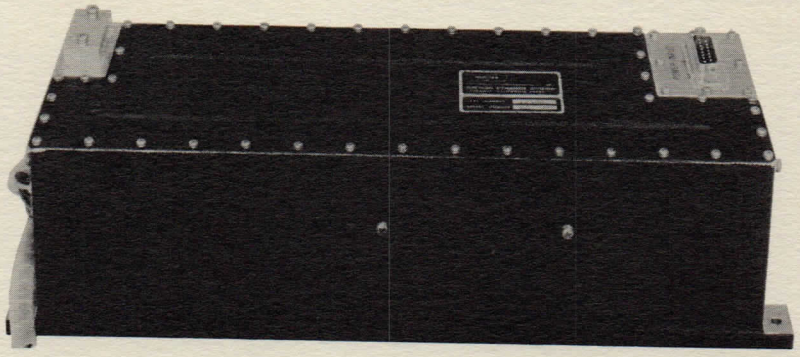

DESCRIPTION

The Hughes Model 1230H is a space qualified, 14 watt, Ku-Band traveling-wave tube amplifier. This unit is designed for satellite communication application where long life and high reliability are of prime importance.

SPECIFICATIONS*

ELECTRICAL

Frequency	14.3 to 15.3 GHz
Power Output	14 W
Duty	CW
Gain Saturation	45 dB
Input Voltage	23 – 33 Vdc
Power Consumption	88 W maximum
Noise Figure	30 dB
Spurious Modulation (from carrier)	–60 dB
Input VSWR	2.0:1
Output VSWR (non-operating)	1.5:1
Telemetry –5 Functions (0–5 V):	Heater Voltage . . . . . Helix Current . . . . . Input Current Cathode Current . . . . . Cathode-Helix Voltage

MECHANICAL

Cooling	conduction
Size	4.4" x 13.0" x 4.05" (11.0 cm x 33.02 cm x 10.3 cm)
Weight	9.8 pounds (4.5 kg)
Connectors (RF)	
(dc)	DAMA-15P-NMB-2

ENVIRONMENTAL

Operating Temperature	10° to 125°F (-13.8^{o} to 51.7^{o}C)
Expected Operating Life	7 years

PROTECTIVE FEATURES

- Undervoltage Turn-Off
- dc Input Overcurrent Turn-Off
- Helix Overcurrent Turn-Off

*All specifications subject to change without notice.

1230H

14 W Ku-Band 14.3–15.3 GHz TWTA

HUGHES

HUGHES AIRCRAFT COMPANY

ELECTRON DYNAMICS DIVISION

TYPICAL PERFORMANCE CURVE

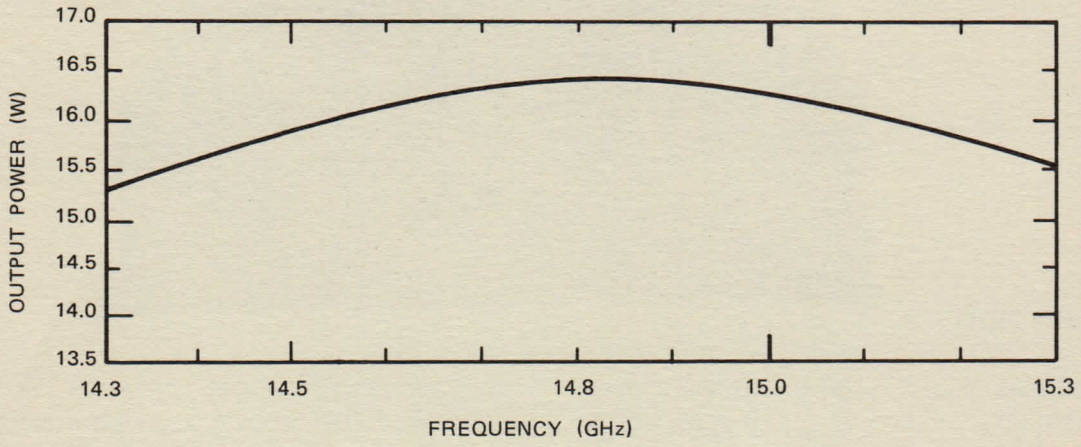

OUTLINE AND MOUNTING DRAWING

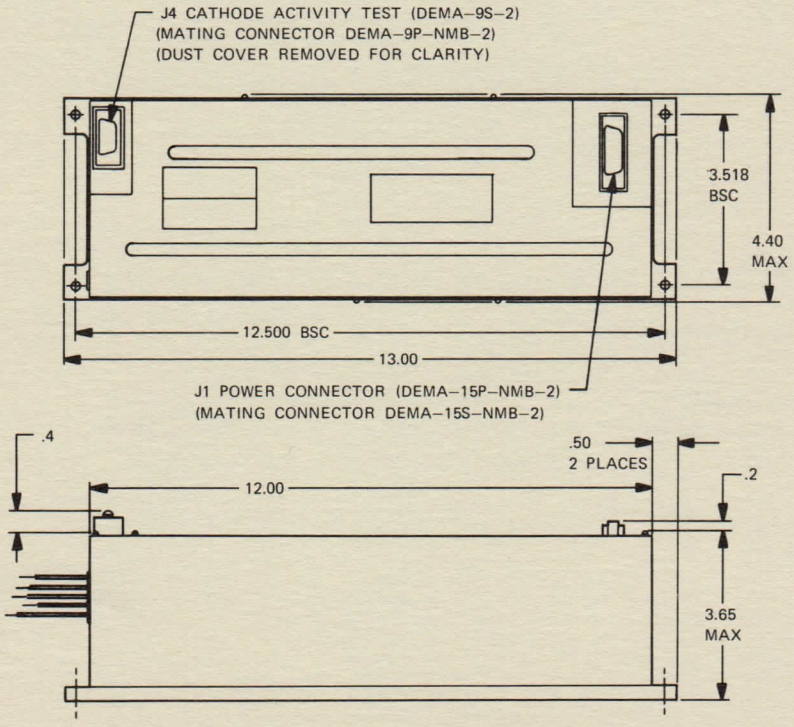

Your Local Representative

HUGHES ELECTRON DYNAMICS DIVISION MICROWAVE TRAVELING-WAVE TUBE PRODUCTS 3100 West Lomita Boulevard, Torrance, California 90509. Tel (213) 534-2121

HUGHES AIRCRAFT COMPANY

Printed in U.S.A. 1-76.

HUGHES

HUGHES AIRCRAFT COMPANY

ELECTRON DYNAMICS DIVISION

1224H

200 mW 4.1-4.2 GHz CW TWTA

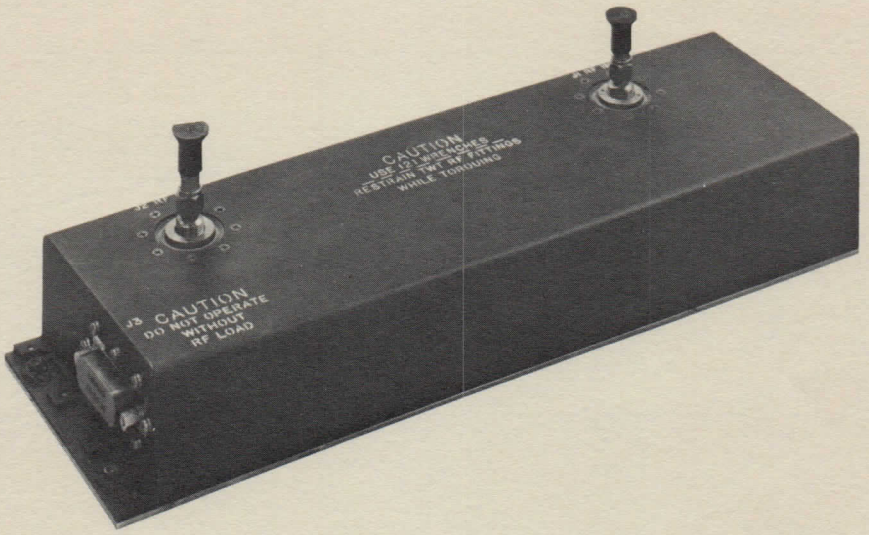

DESCRIPTION

The Hughes Model 1224H is a lightweight, high efficiency, long life space qualified traveling-wave tube amplifier. This small compact unit, which will be used as the output amplifier for analog communications, was developed for the propagation experiment onboard the ATS-F spacecraft. The amplifier utilizes the Hughes Model 233HC traveling-wave tube.

SPECIFICATIONS

Frequency	4.1 – 4.2 GHz
Power Output	200 mW
Duty	CW
Gain (saturation)	52 dB
Input Voltage	28 Vdc ±2%
Input Power	2.9 W
Telemetry (0–5 Vdc)	input current
Cooling	conduction
Weight	2.7 pounds
Size	11.0 x 3.5 x 1.7 inches
Connectors	
RF	SMA
DC	DAM-15P-NMB-1-A106
Expected Life	50,000 hours

124H

200 mW 4.1-4.2 GHz CW TWTA

HUGHES

HUGHES AIRCRAFT COMPANY

ELECTRON DYNAMICS DIVISION

PERFORMANCE CURVE

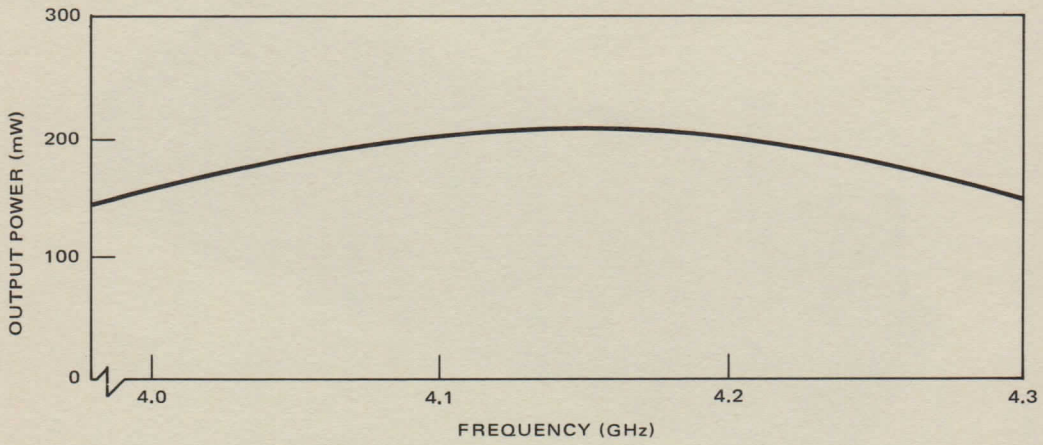

OUTLINE AND MOUNTING DRAWING

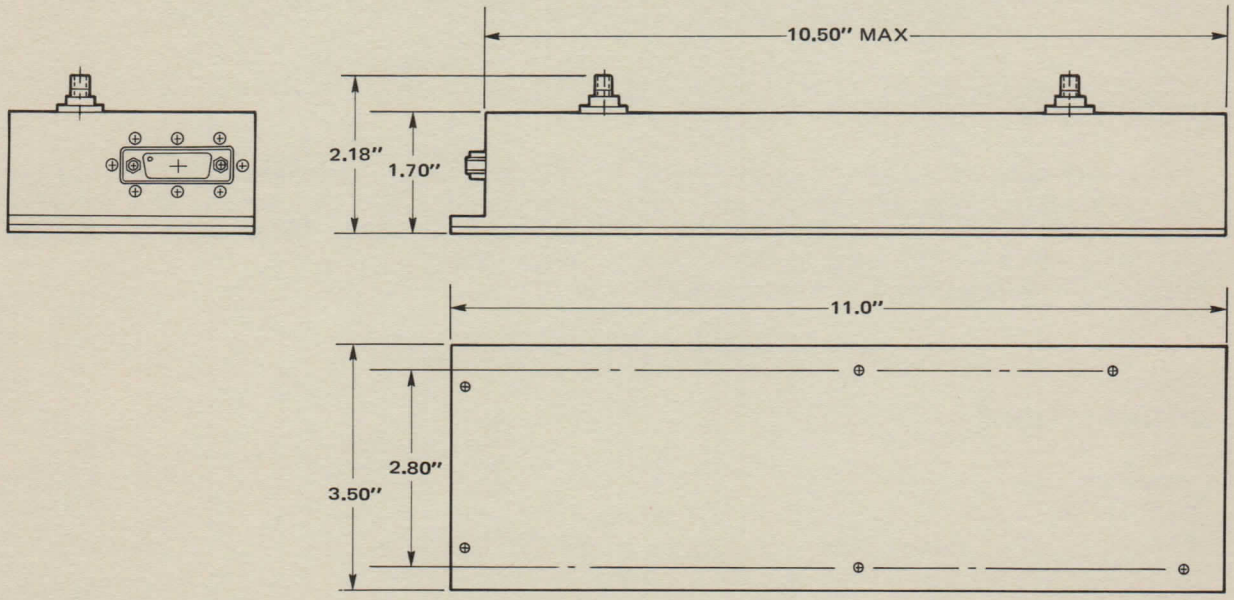

YOUR LOCAL REPRESENTATIVE

HUGHES
HUGHES AIRCRAFT COMPANY
ELECTRON DYNAMICS DIVISION / 3100 W. LOMITA BLVD. TORRANCE, CA. 90509/TEL (213) 534-2121

Printed in U.S.A.–3-73

HUGHES

HUGHES AIRCRAFT COMPANY

ELECTRON DYNAMICS DIVISION

1238H

40 W 7-8 GHz TWTA

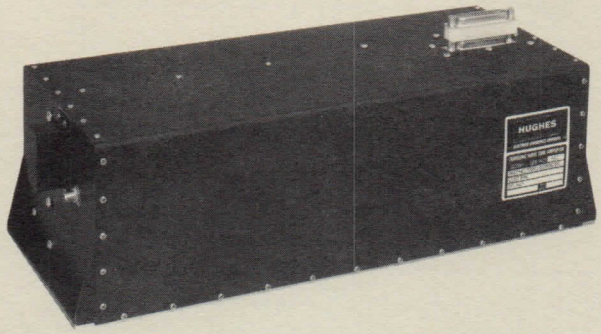

DESCRIPTION

The Hughes Model 1238H is a space qualified traveling-wave tube amplifier, designed for long life, high reliability communication applications. The unit utilizes the Hughes Model 293H TWT.

SPECIFICATIONS*

Frequency	7-8 GHz
Power Output	40 W minimum
Duty	CW
Saturated Gain	53 dB minimum
Input Voltage	22 to 33 dc
Power Consumption	117 W maximum
Noise Figure	33 dB maximum
Spurious Modulation	AM > 50, PM > 52 dB below carrier level
VSWR (Output Operating)	3.0:1 maximum
Telemetry . . . . . 7 functions	input current, helix current, collector temperature, cathode current, cathode voltage, regulated bus, heater current

MECHANICAL

Cooling	conduction
Size	14.5 inches (36.83 cm) long X 6.0 inches (15.24 cm) wide X 4.5 inches (11.43 cm) high
Weight	15.75 pounds (7.14 kg)
Connectors . . . . . RF	SMA/TNC
DC	CANNON D

ENVIRONMENTAL

Operating Temperature	4°C to 80°C

WARRANTY

Expected Life	7 years

PROTECTIVE FEATURES

- Input Current
- Helix Current
- Over and Under Input Voltage
- Internal Regulated Bus

* All specifications subject to change without notice.

1238H

40 W 7-8 GHz TWTA

HUGHES

HUGHES AIRCRAFT COMPANY

ELECTRON DYNAMICS DIVISION

TYPICAL PERFORMANCE CURVE

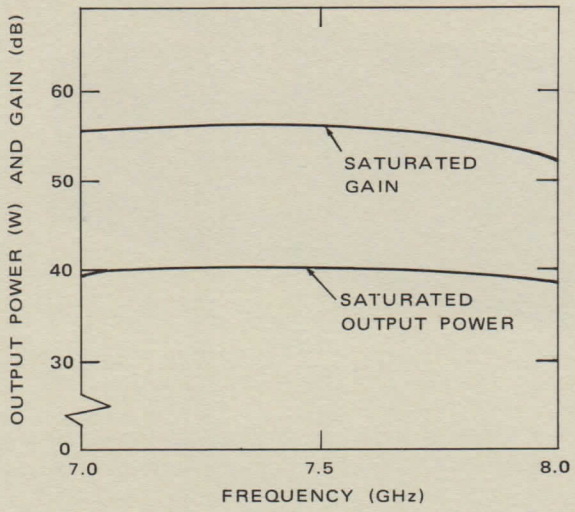

OUTLINE DRAWING

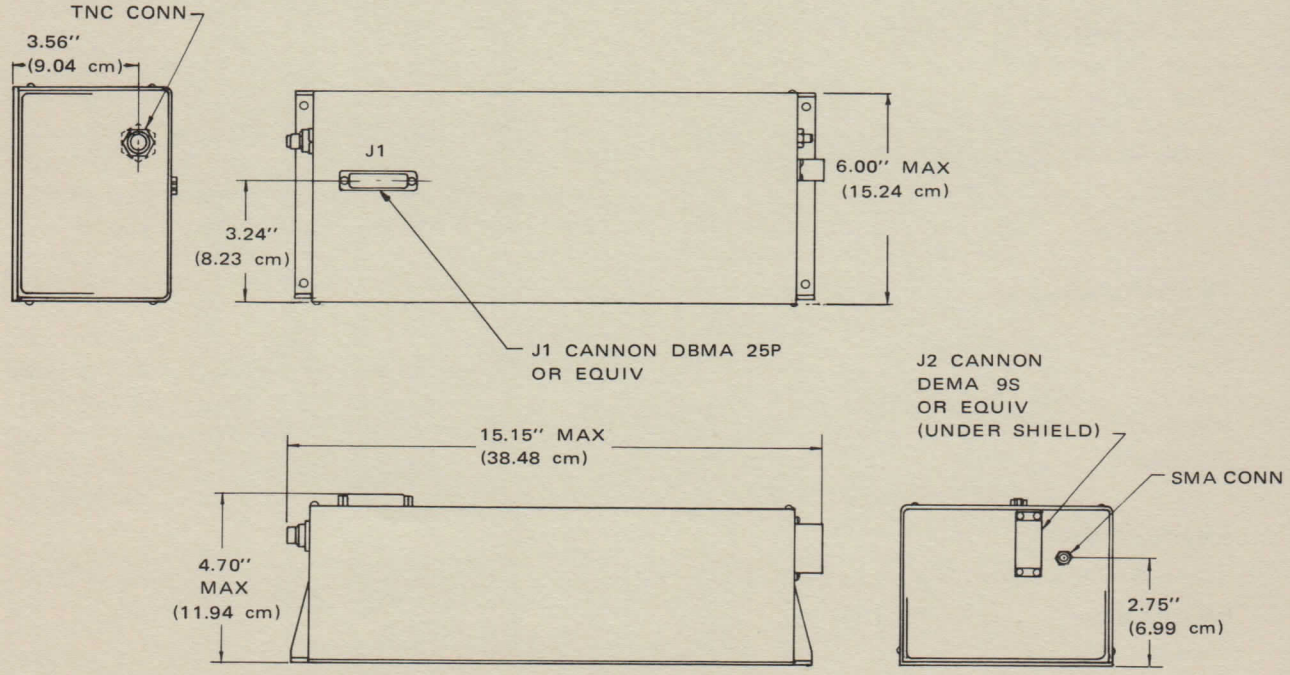

HUGHES
HUGHES AIRCRAFT COMPANY
ELECTRON DYNAMICS DIVISION 3100 West Lomita Boulevard, Torrance, California 90509, Tel (213) 534-2121

Printed in U.S.A.—11—76

HUGHES

HUGHES AIRCRAFT COMPANY

ELECTRON DYNAMICS DIVISION

1240H

20 W 6.0-10.0 GHz TWTA

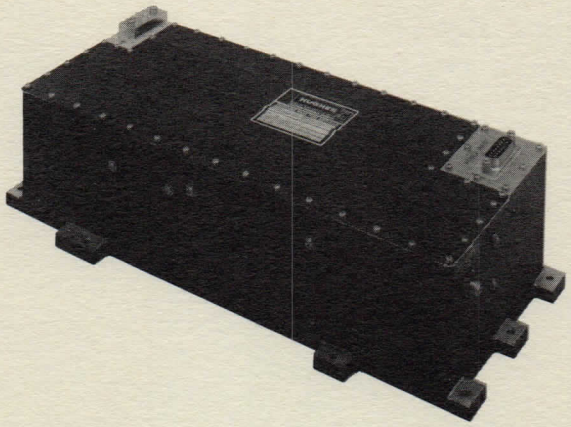

DESCRIPTION

The Hughes Model 1240H is a 20 watt, X-band traveling-wave tube amplifier. This long-life, high reliability, space qualified unit is designed for communication applications for the NATO Satellite. The TWTA utilizes the Hughes Model 265HA traveling-wave tube.

SPECIFICATIONS*

ELECTRICAL

Frequency	6.0 – 10.0 GHz
Power Output	20 W
Duty	CW
Gain (saturation)	48 dB
Input Voltage	23 – 33 V
Power Consumption	109 W maximum
Noise Figure	30 dB
Spurious Modulation (ref to carrier)	–60 dB
Input VSWR	2.1:1 maximum
Output VSWR (without isolators)	2.0:1 maximum
Telemetry: –5 Functions (0–5 V):	Heater Voltage . . . . . Helix Current . . . . . Input Current
	Cathode Current . . . . . Cathode-Helix Voltage

MECHANICAL

Cooling	conduction
Size	12" x 5" x 3" (30.48 cm x 12.7 cm x 7.62 cm)
Weight	9.6 pounds (4.35 kg)
Connectors (RF)	SMA-FEMALE
(dc)	DAMA-15P-NMB-2

ENVIRONMENTAL

Operating Temperature	0° to 155°F (-18° to 67.2^{o}C)
Expected Operating Life	7 years

PROTECTIVE FEATURES

- Undervoltage Turn-Off
- dc Input Overcurrent Turn-Off
- Helix Overcurrent Turn-Off

*All specifications subject to change without notice.

1240H

20 W 6.0-10.0 GHz TWTA

HUGHES

HUGHES AIRCRAFT COMPANY

ELECTRON DYNAMICS DIVISION

TYPICAL PERFORMANCE CURVE

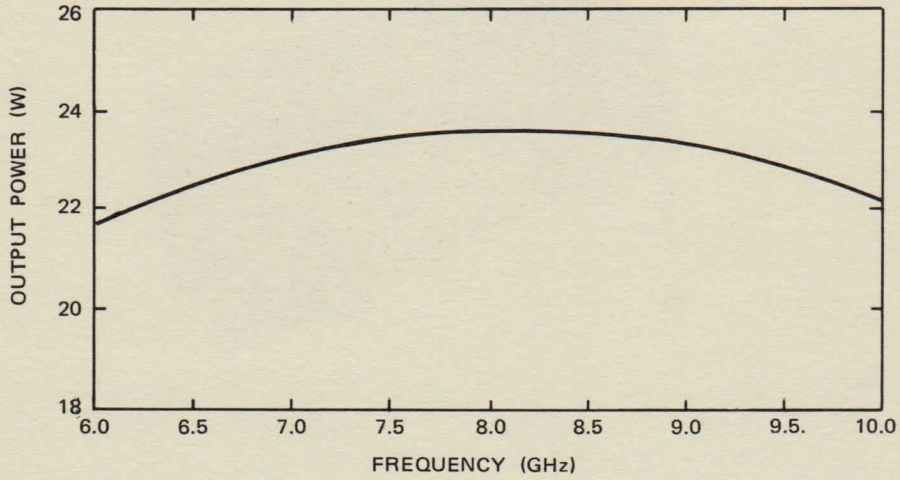

OUTLINE DRAWING

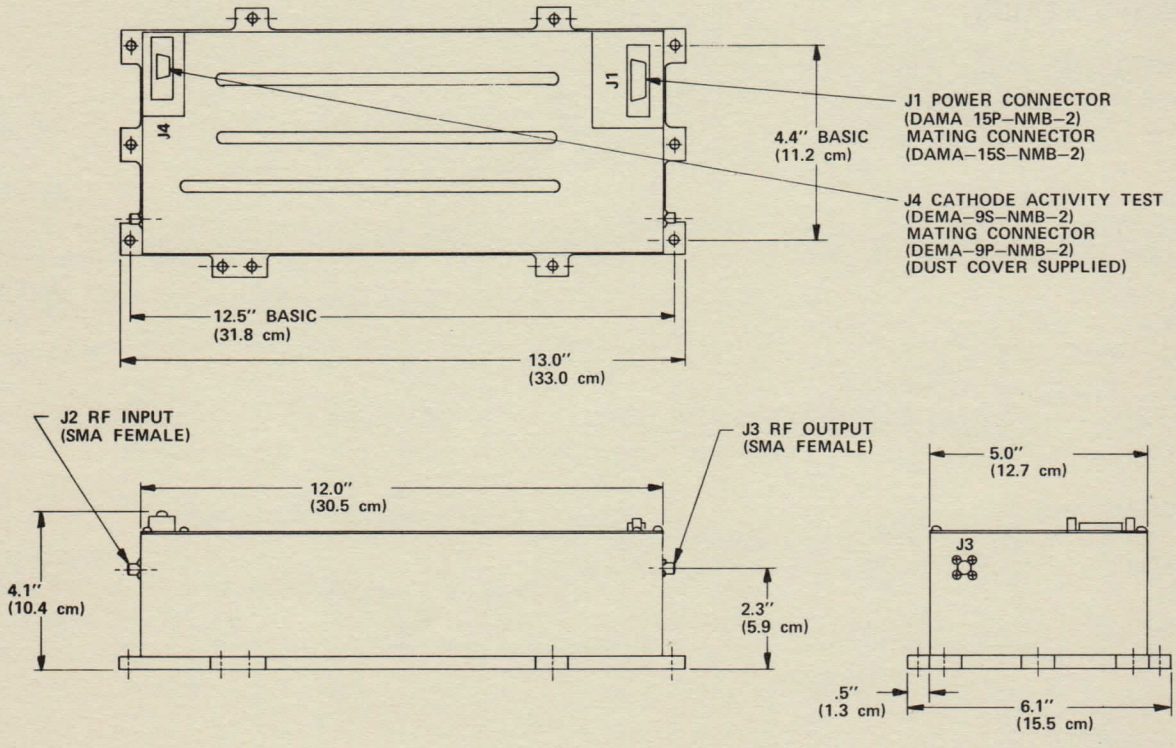

Your Local Representative

HUGHES ELECTRON DYNAMICS DIVISION MICROWAVE TRAVELING-WAVE TUBE PRODUCTS 3100 West Lomita Boulevard, Torrance, California 90509, Tel (213) 534-2121

HUGHES AIRCRAFT COMPANY

Printed in U.S.A. 1-76

HUGHES

HUGHES AIRCRAFT COMPANY

ELECTRON DYNAMICS DIVISION

1243H

4.5 W, 3.7-4.2 GHz TWTA

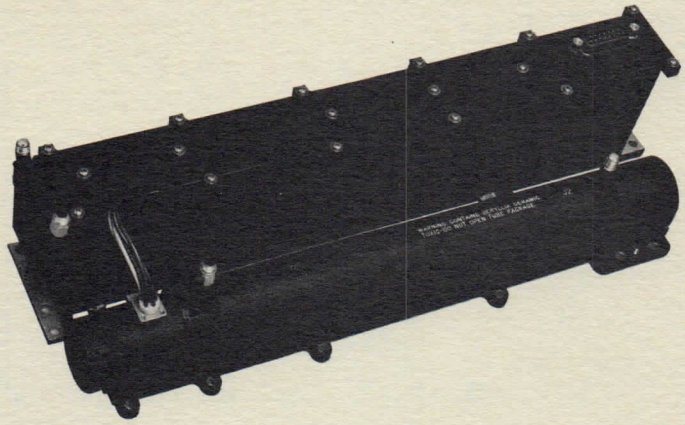

DESCRIPTION

The Hughes Model 1243H traveling-wave tube amplifier is a 4.5 watt C-Band unit designed and built for the intelsat V spacecraft. This high efficiency, long-life TWTA in combination with the environmentally rugged package makes this unit ideally suited for space communications applications. The TWTA utilizes the 244H TWT with an equalizer on the RF input for constant gain;

SPECIFICATIONS*

ELECTRICAL

Frequency	3.7–4.2 GHz
Output Power	4.5 W minimum
Duty	CW
Saturated Gain	56 dB typical
Input Voltage	25.5–42.5 V(dc)
Power Consumption	17.6 W maximum
Noise Figure	30 dB maximum
VSWR (hot input)	2.5:1
(hot output)	2.5:1
Telemetry	helix current, heater on/off

MECHANICAL

Cooling	conduction
Size	13.4" L x 3.95" W x 4.21" H (34.04 cm x 10.03 cm x 10.7 cm)
Weight	3.1 pounds (1.41 kg)
Connectors (RF)	SMA (female)
(DC)	Cannon DAM-15P

ENVIRONMENTAL

Operating Temperature	$-40^{\circ}C$ to $+60^{\circ}C$
Expected Operating Life	10 years

PROTECTIVE FEATURES

- Undervoltage
- Input Overcurrent

*Specifications subject to change without prior notice.

1243H

4.5 W, 3.7-4.2 GHz TWTA

HUGHES

HUGHES AIRCRAFT COMPANY

ELECTRON DYNAMICS DIVISION

TYPICAL PERFORMANCE CURVE

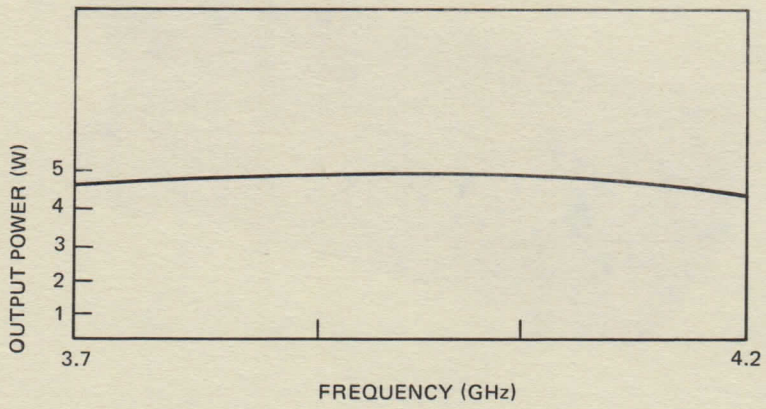

OUTLINE AND MOUNTING DRAWING

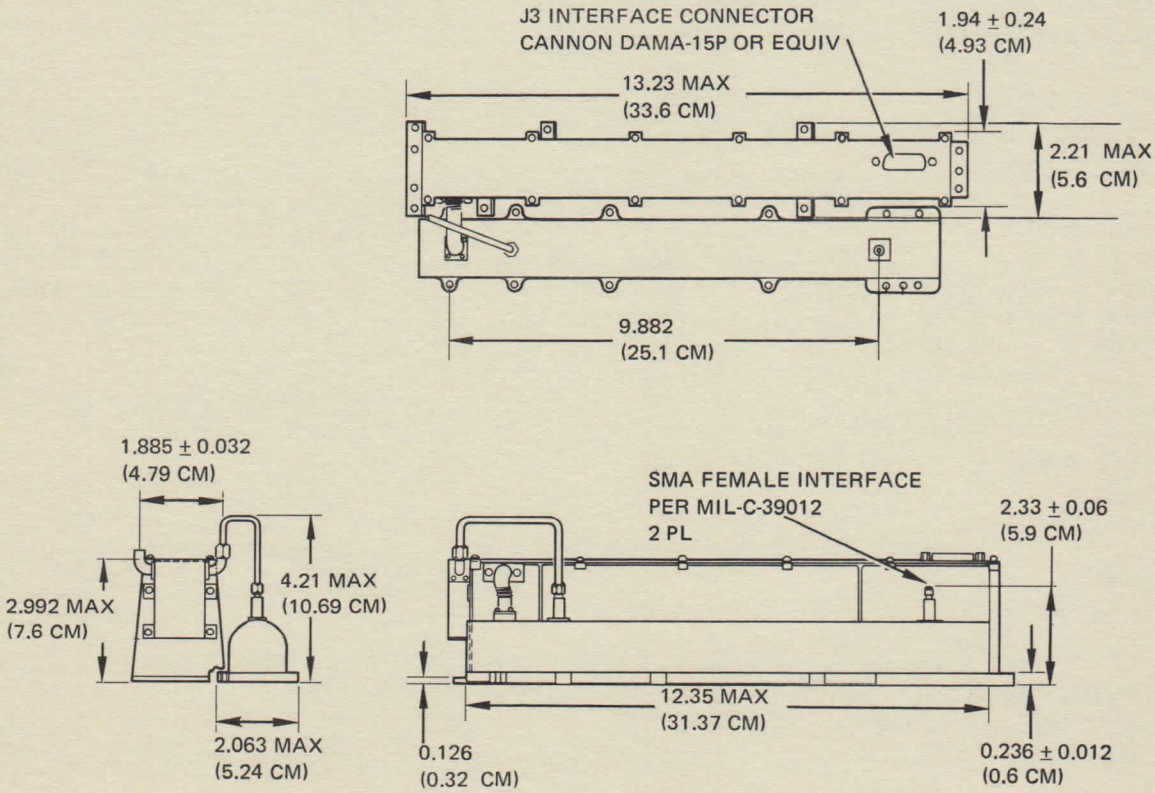

HUGHES ELECTRON DYNAMICS DIVISION 3100 West Lomita Boulevard, Torrance, California 90509, Tel (213) 534-2121

HUGHES AIRCRAFT COMPANY

Printed in U.S.A. 7-78 AL

HUGHES

HUGHES AIRCRAFT COMPANY

ELECTRON DYNAMICS DIVISION

1244H

8.5 W, 3.7-4.2 GHz TWTA

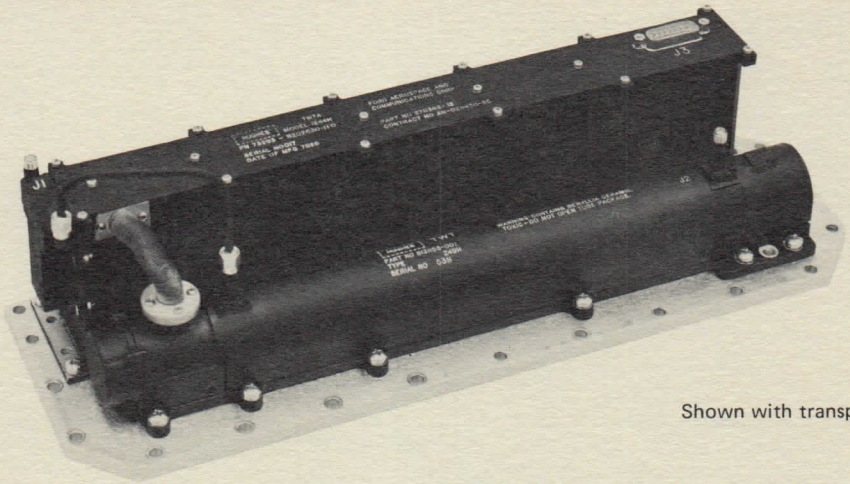

Shown with transport plate

DESCRIPTION

The Hughes Model 1244H traveling-wave tube amplifier is an 8.5 watt, C-Band unit designed and built for communications and broadcast satellite applications. This high efficiency, long-life TWTA in combination with the environmentally rugged package makes the unit ideally suited for space applications. The TWTA utilizes the 249H TWT.

SPECIFICATIONS*

Electrical

Frequency	3.7–4.2 GHz
Output Power	8.5W
Duty	CW
Saturated Gain	55dB
Input Voltage	26.5–42.5V
Power Consumption	29 W maximum
Noise Figure	30dB
VSWR (hot input)	2.5:1
(hot output)	2.5:1
Telemetry	helix current, heater on/off

MECHANICAL

Cooling	conduction
Size	13.4 L x 3.95 W x 4.21H (30.04 cm x 10.03 cm x 10.7 cm)
Weight	3.3 pounds (1.5 kg)
Connectors (RF)	SMA Female
(DC)	Cannon DAM-15P

ENVIRONMENTAL

Operating Temperature	-40°C to $+60^{\circ}$C
Expected Operating Life	10 years

PROTECTIVE FEATURES

- Undervoltage
- Input Overcurrent

*Specifications subject to change without prior notice.

1244H

8.5 W, 3.7-4.2 GHz TWTA

HUGHES

HUGHES AIRCRAFT COMPANY

ELECTRON DYNAMICS DIVISION

TYPICAL PERFORMANCE CURVE

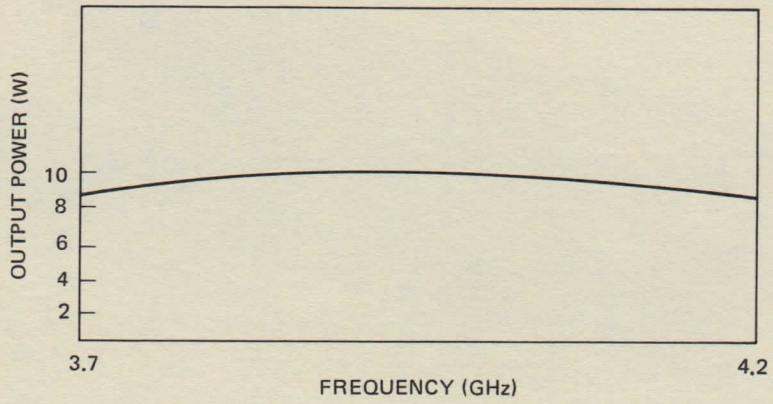

OUTLINE AND MOUNTING DRAWING

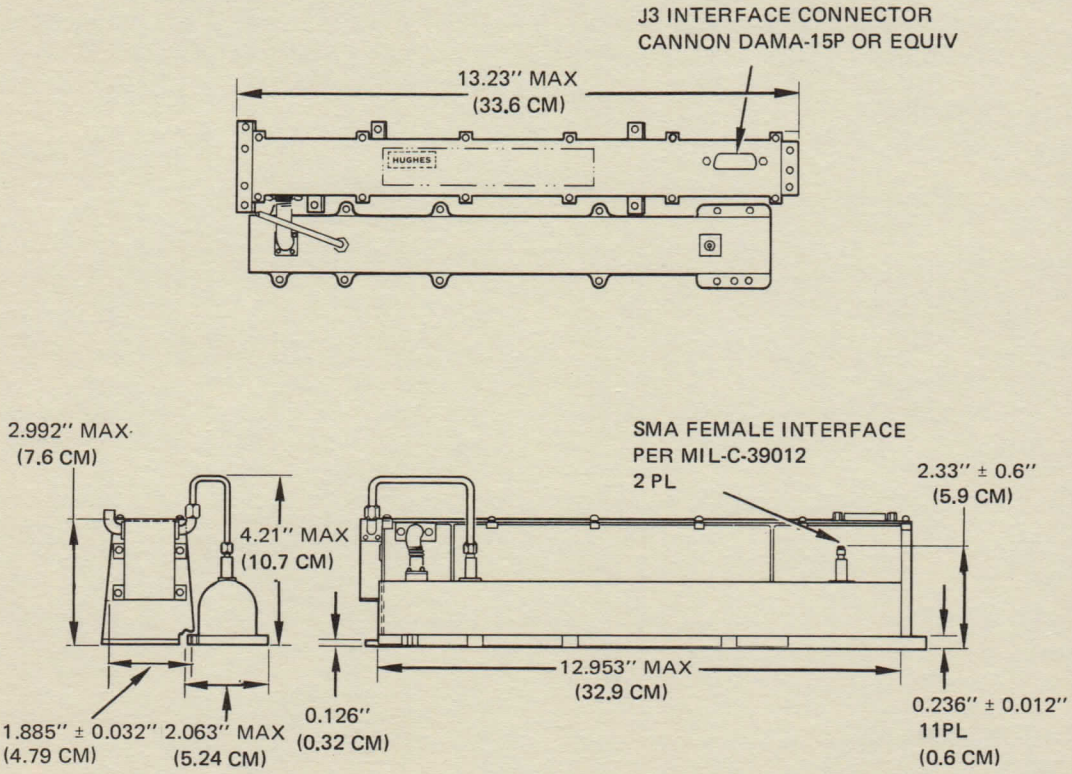

HUGHES
HUGHES AIRCRAFT COMPANY
ELECTRON DYNAMICS DIVISION 3100 West Lomita Boulevard, P.O. Box 2999, Torrance, California 90509, Tel (213) 517-6000

Printed in U.S.A. 3/82 AL

HUGHES

HUGHES AIRCRAFT COMPANY

ELECTRON DYNAMICS DIVISION

1247H

20W CW TWTA

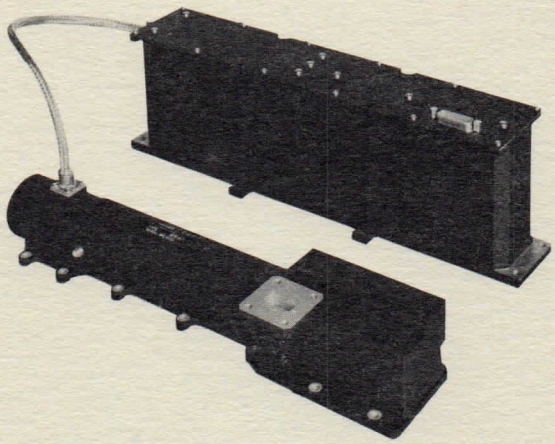

DESCRIPTION

The Hughes Model 1247H is a 20 watt Ku-Band traveling-wave tube amplifier. This long-life, high reliability, space qualified unit is designed for telemetry and communication applications. The TWTA utilizes either the Hughes Model 286HP or 286HM traveling-wave tube.

SPECIFICATIONS*

ELECTRICAL

Frequency	286HP 11.7-12.2 GHz
	286HM 14.5-l5.5 GHz
Power Output	20 W minimum
Bandwidth	500 MHz
Duty	CW
Saturated Gain	60 dB
Efficiency	30% minimum
AM/PM Conversion	<5.0°/dB
Noise Figure	32 dB
Telemetry	helix current
Input Voltage	2l – 35 Vdc
Design Life	10 years

MECHANICAL

Cooling		conduction
Size	TWT	12.75" L x 2.5" W x 2.15" H (32.4 cm x 6.4 cm x 5.5 cm)
	EPC	12.75" L x 2.5" W x 4.0" H (32.4 cm x 6.4 cm x 10.2 cm)
Weight		7.5 pounds (3.4 kg)
Connectors	(RF input)	SMA
	(RF output)	286HP (WR 75), 286HM (WR 62 waveguide
	(DC)	DAMA 15P

PROTECTIVE FEATURES

- Overvoltage
- DC Input Power

*Specifications subject to change without prior notice.

1247H

20W CW TWTA

HUGHES

HUGHES AIRCRAFT COMPANY

ELECTRON DYNAMICS DIVISION

OUTLINE AND MOUNTING DRAWING

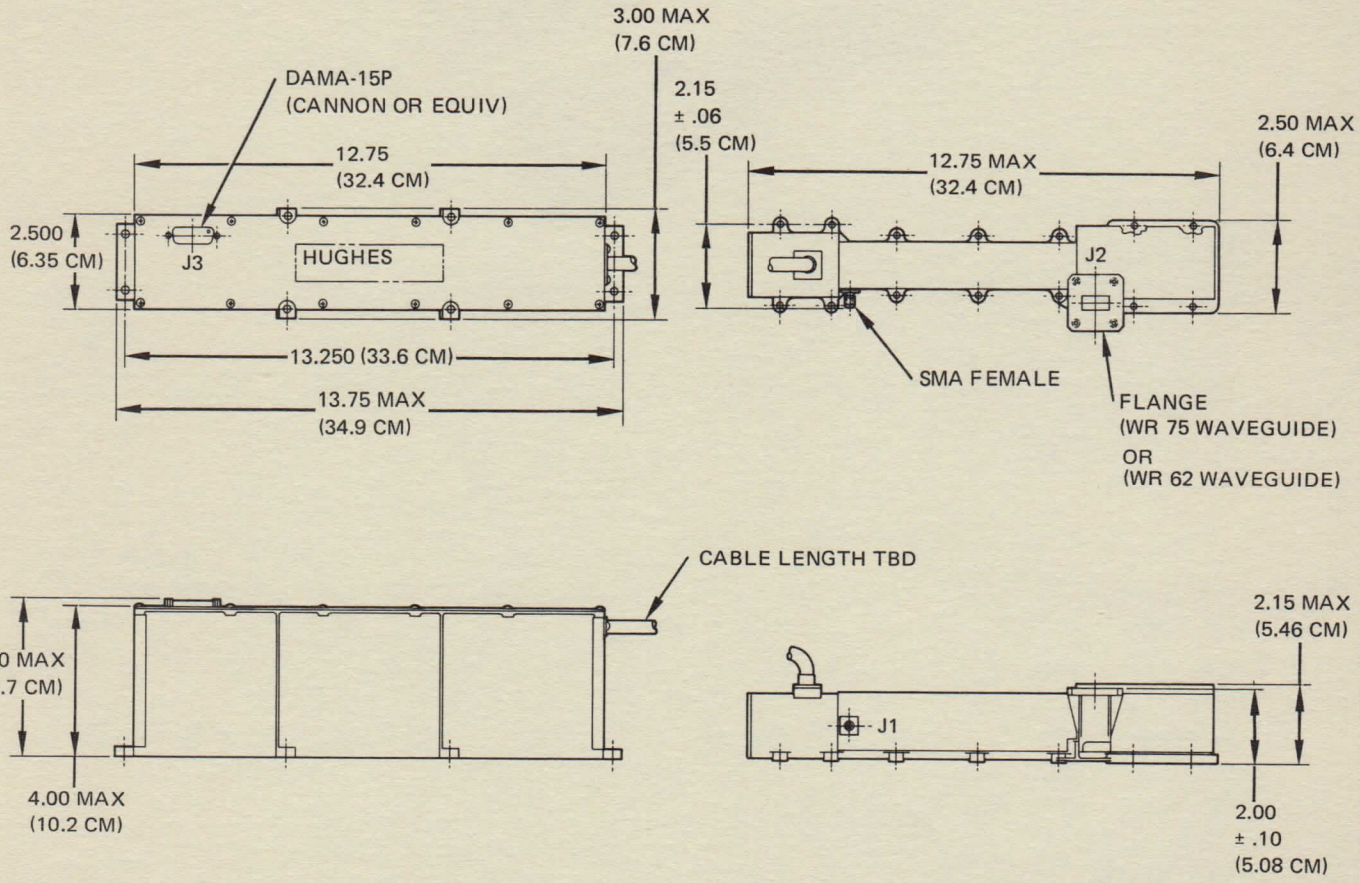

HUGHES

HUGHES AIRCRAFT COMPANY

ELECTRON DYNAMICS DIVISION 3100 West Lomita Boulevard, Torrance, California 90509, Tel (213) 534-2121

HUGHES

HUGHES AIRCRAFT COMPANY

ELECTRON DYNAMICS DIVISION

1248H

10 W 7.25 – 7.75 GHz TWTA

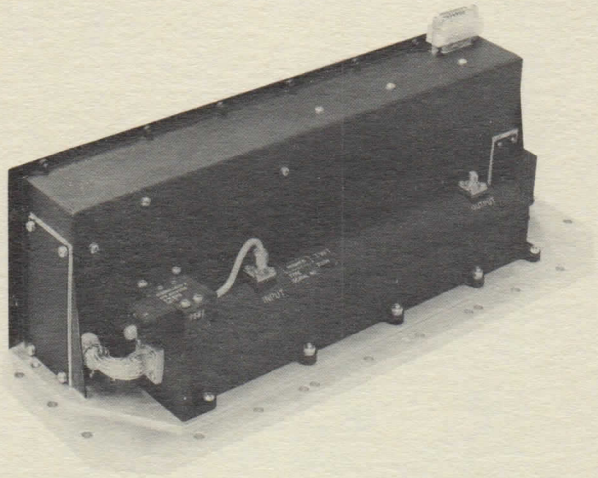

DESCRIPTION

The Hughes Model 1248H is a space-qualified traveling-wave tube amplifier designed and built for military satellite applications. The small light-weight amplifier is designed for long life and high reliability. The unit utilizes the Hughes Model 298H traveling-wave tube.

SPECIFICATIONS*

Frequency	7.25 – 7.75 GHz
Power Output	10 W minimum
Duty	CW
Gain (saturation)	50 dB
Input Voltage	22 – 33 Vdc
Power Consumption	35 W
Noise Figure	30 dB maximum
Spurious Modulation	PM-60 dBc, AM-50 dB
Input VSWR	1.25:1
Output VSWR	2.0:1
Telemetry	cathode current: ±5%; helix current: ±5%; cathode voltage: ±2%

Mechanical

Cooling	conduction
Size	4.30 in. (10.92 cm) high X 4.50 in. (11.43 cm) wide X 13.58 in. (34.49 cm) long
Weight	6.5 pounds (2.95 kg) maximum
RF Connectors	SMA
DC Connectors	Cannon-Dema-15P

Environmental

Operating Temperature	40°F (4°C) to 175°F (79°C)

Warranty

Expected Life	7 years

Protective Features

Under voltage, over voltage, input bus over-current, helix over-current.

*Subject to change without prior notice.

1248H

10 W 7.25 – 7.75 GHz TWTA

HUGHES

HUGHES AIRCRAFT COMPANY

ELECTRON DYNAMICS DIVISION

PERFORMANCE CURVE

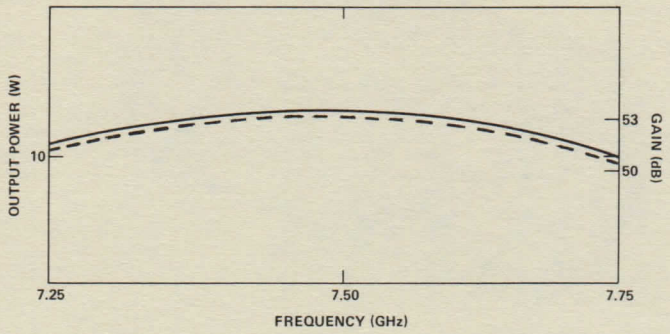

OUTLINE AND MOUNTING DRAWING

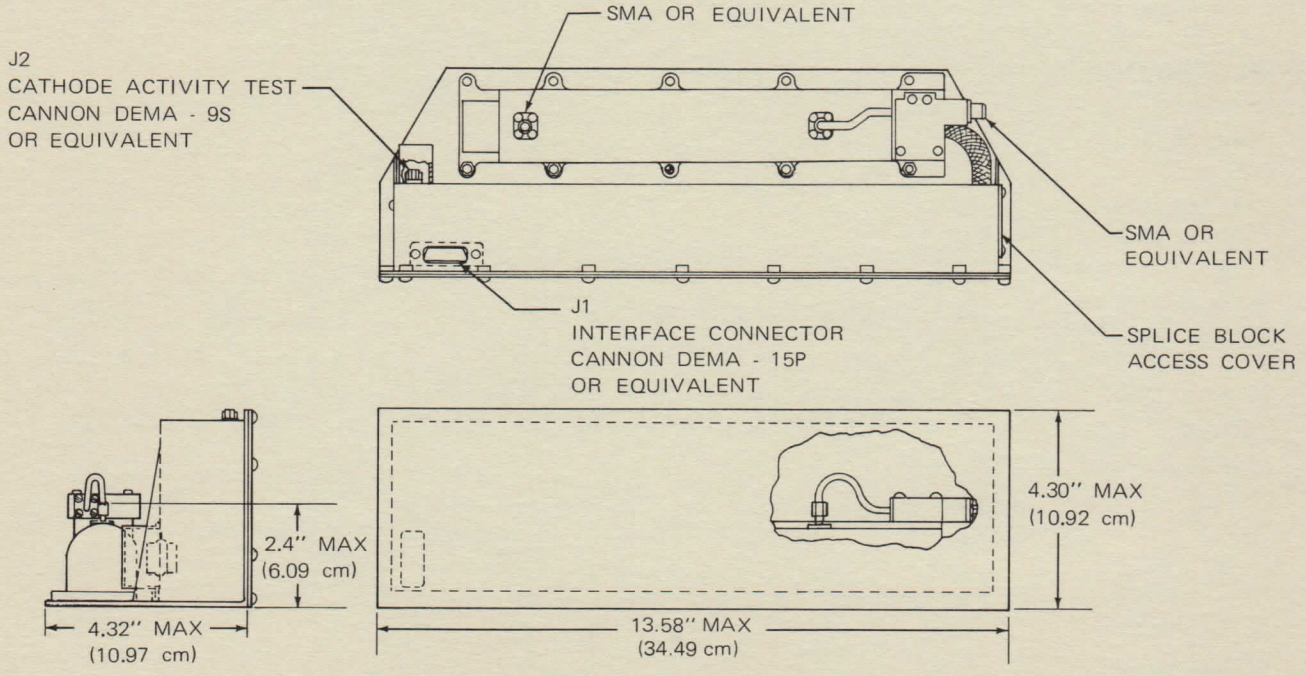

HUGHES HUGHES AIRCRAFT COMPANY **ELECTRON DYNAMICS DIVISION** 3100 West Lomita Boulevard, P.O. Box 2999, Torrance, California 90509, Tel (213) 517-6000

Printed in U.S.A. 3/82 AL

HUGHES

HUGHES AIRCRAFT COMPANY

ELECTRON DYNAMICS DIVISION

1264H

5.5 W 3.7–4.2 GHz TWTA

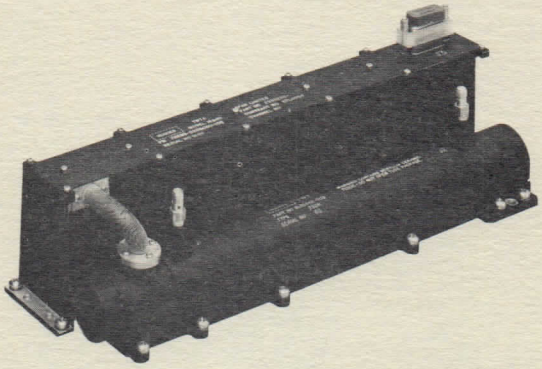

DESCRIPTION

The Hughes Model 1264H traveling-wave tube amplifier was built for the Tracking and Data Relay Satellite System. The high efficiency and rugged design of this unit is well suited for satellite communications applications. The unit utilizes the Hughes Model 230H TWT.

SPECIFICATIONS*

RF

Frequency	3.7 - 4.2 GHz
Power Output	5.5 W
Duty	CW
Gain Saturation	55 dB
Input Voltage	22 - 40 V
Power Consumption	19 W maximum
Noise Figure	28 dB maximum
Spurious Modulation	-60 dBC
VSWR: Input (operating)	1.6:1
Output (operating)	1.6:1
Telemetry	helix current

MECHANICAL

Size	13.23" X 4.3" X 3.2" (33.60 cm X 10.92 cm X 8.13 cm)
Cooling	conduction
Weight	3 pounds (1.36 kg)
Connectors (RF)	SMA female
(DC)	Cannon type D

ENVIRONMENTAL

Expected Life	10 years
Operating Temperature	0°C - 60°C

PROTECTIVE FEATURES

Overcurrent
Undervoltage

*Specifications subject to change without notice.

1264H

5.5 W 3.7–4.2 GHz TWTA

HUGHES

HUGHES AIRCRAFT COMPANY

ELECTRON DYNAMICS DIVISION

TYPICAL PERFORMANCE CURVE

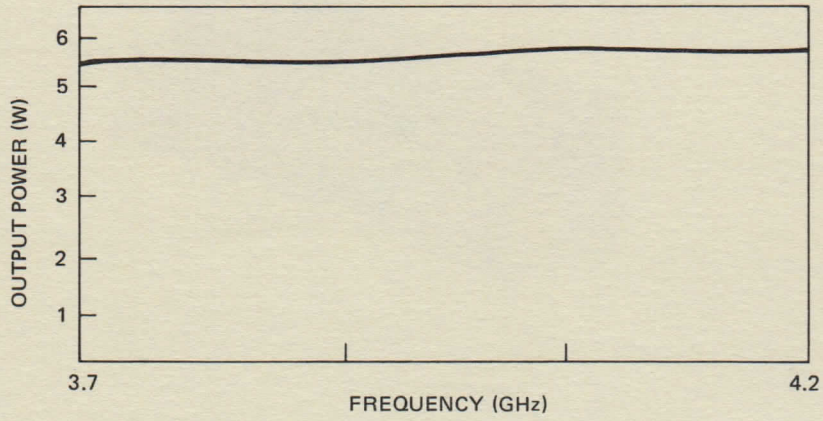

OUTLINE AND MOUNTING DRAWING

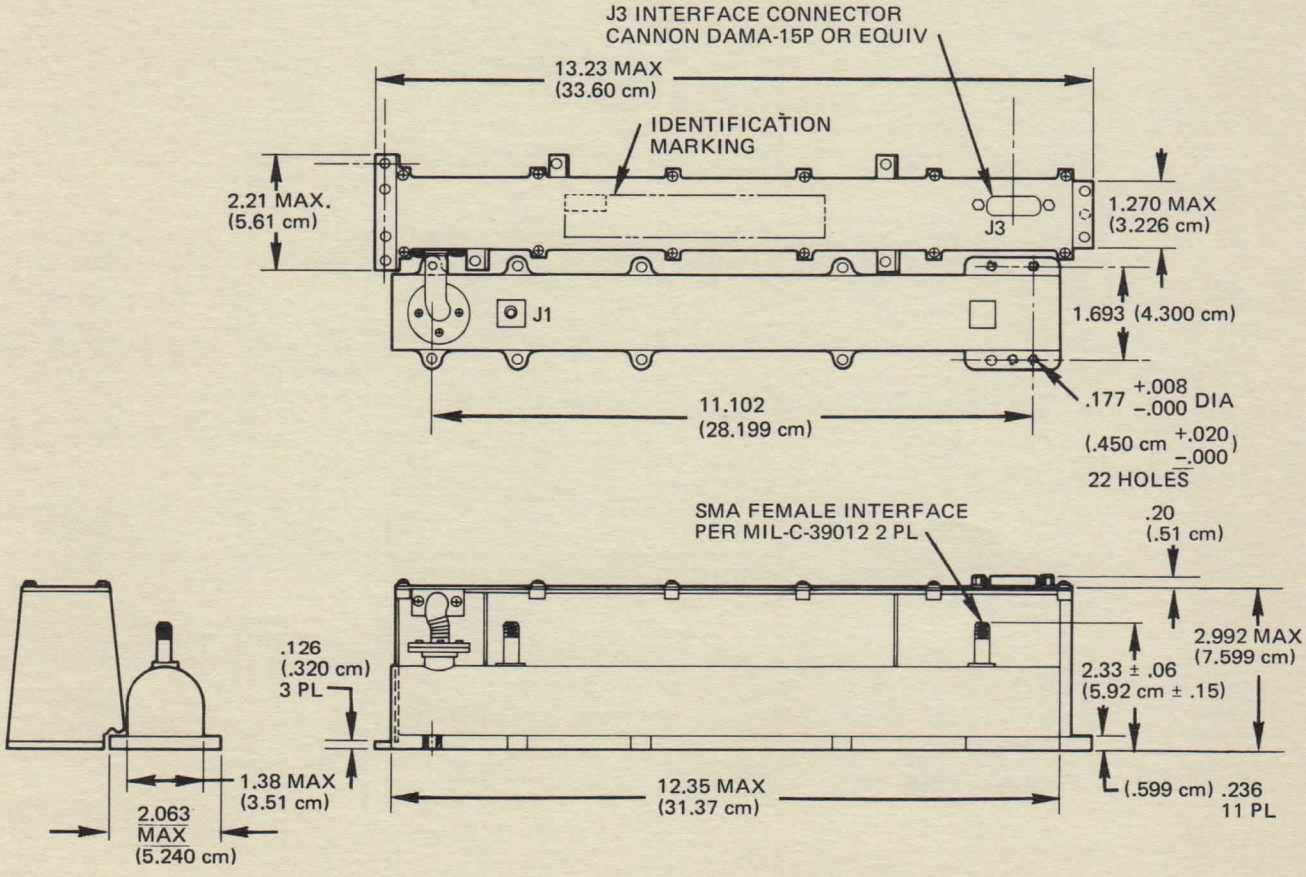

PRINTED IN U.S.A. 2/79 AL

HUGHES

HUGHES AIRCRAFT COMPANY

ELECTRON DYNAMICS DIVISION

1266H

26 W 2.025-2.120 GHz TWTA

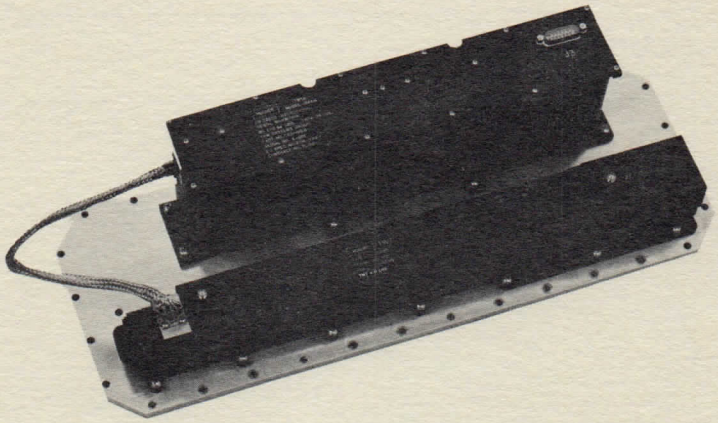

DESCRIPTION

The Hughes Model 1266H is a space-qualified traveling-wave tube amplifier designed and built for the Tracking and Data Relay Satellite System. This compact and light weight TWTA is designed for high efficiency, long life and high reliability in space communications applications. The unit incorporates the Hughes Model 278H TWT.

SPECIFICATIONS*

RF

Frequency	2.025–2.120 GHz
Power Output	26 W
Duty	CW
Saturated Gain	43 dB
Input Voltage	22–40 V
Power Consumption	82 W maximum
Noise Figure	32 dB
Spurious Modulation	-60 dBC
VSWR (input while operating)	1.5:1
(output while operating)	2.0:1
Telemetry	helix current

MECHANICAL

Cooling	conduction
Size EPC	13.75" x 3" x 4.25" (34.5 cm x 7.6 cm x 10.8 cm)
TWT	17.50" x 2.5" x 1.85" (41.9 cm x 19.3 cm x 27.4 cm)
Weight	7.5 pounds (3.4 kg)
Connectors (RF)	SMA female
(DC)	Cannon type D

ENVIRONMENTAL

Operating Temperature	40°F–160°F (qualification)
Expected Operating Life	10 years

PROTECTIVE FEATURES

Undervoltage
Overcurrent

*Specifications subject to change without prior notice.

1266H

26 W 2.025-2.120 GHz TWTA

HUGHES

HUGHES AIRCRAFT COMPANY

ELECTRON DYNAMICS DIVISION

TYPICAL PERFORMANCE CURVE

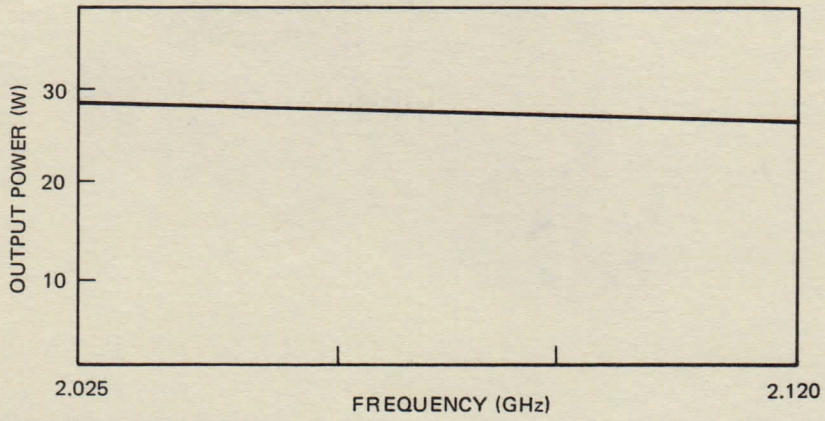

OUTLINE AND MOUNTING DRAWING

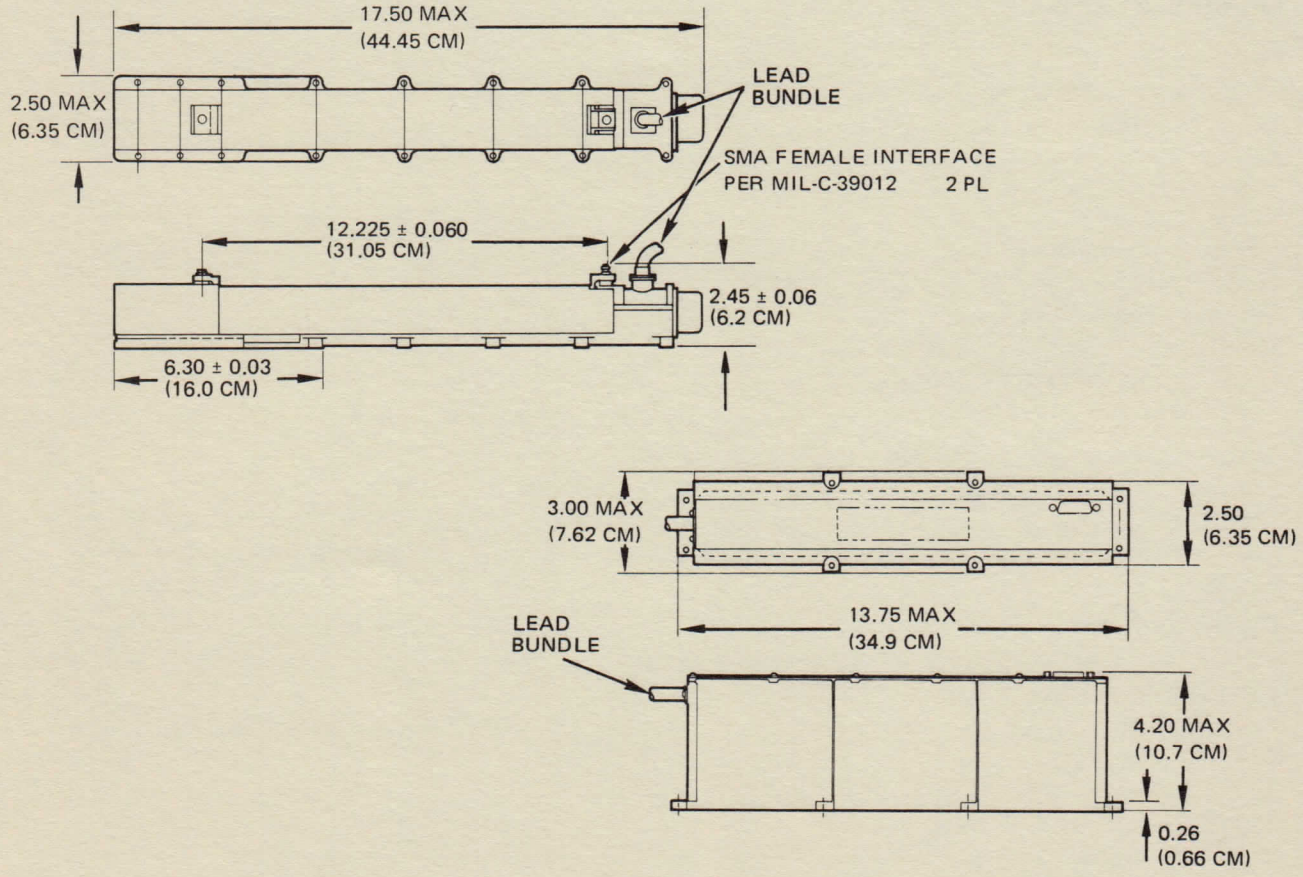

HUGHES ELECTRON DYNAMICS DIVISION 3100 West Lomita Boulevard, Torrance, California 90509, Tel (213) 534-2121

HUGHES AIRCRAFT COMPANY

AL

Printed in USA 7/78

HUGHES

HUGHES AIRCRAFT COMPANY

ELECTRON DYNAMICS DIVISION

1268H

1.5 W 11.85-13.8 GHz TWTA

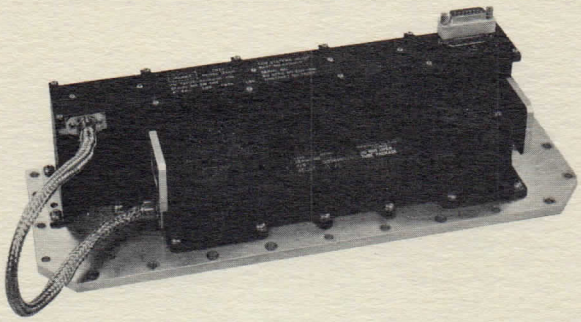

The Hughes Model 1268H traveling-wave tube amplifier is a high efficiency, light weight unit designed and built for the Tracking and Data Relay Satellite System.

This rugged amplifier is designed for long life and high reliability in space communication applications. The TWTA incorporates the Hughes Model 845H TWT.

SPECIFICATIONS*

ELECTRICAL

Frequency	11.85–13.8 GHz
Power Output	1.5 W
Duty	CW
Saturated Gain	42–46 dB
Input Voltage	22–40 V
Power Consumption	15 W maximum
Noise Figure	28 dB maximum
Spurious Modulation	-60 dBC
VSWR (hot input)	2.0:1
(hot output)	2.5:1
Telemetry	helix current

MECHANICAL

Cooling		conduction
Size	EPC	13.23" x 2.21" x 3.19" (33.6 cm x 5.6 cm x 8.1 cm)
	TWT	9.85" x 2.05" x 2.62" (25.0 cm x 5.2 cm x 6.6 cm)
Weight		4.5 pounds (2.04 kg)
Connectors (RF)		WR-75 waveguide
(DC)		Cannon type D

ENVIRONMENTAL

Operating Temperature	20° to 140°F (qualification)
Expected Operating Life	10 years

PROTECTIVE FEATURES

Undervoltage
Overcurrent

*All specifications subject to change without notice.

1268H

1.5 W 11.85-13.8 GHz TWTA

HUGHES

HUGHES AIRCRAFT COMPANY

ELECTRON DYNAMICS DIVISION

TYPICAL PERFORMANCE CURVE

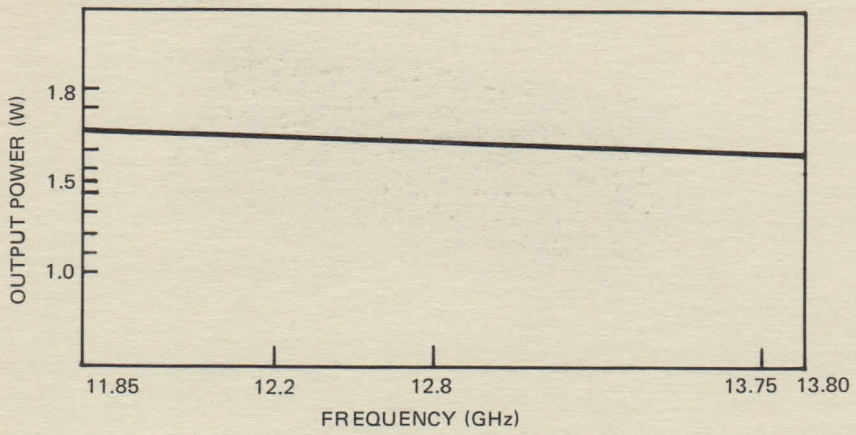

OUTLINE AND MOUNTING DRAWING

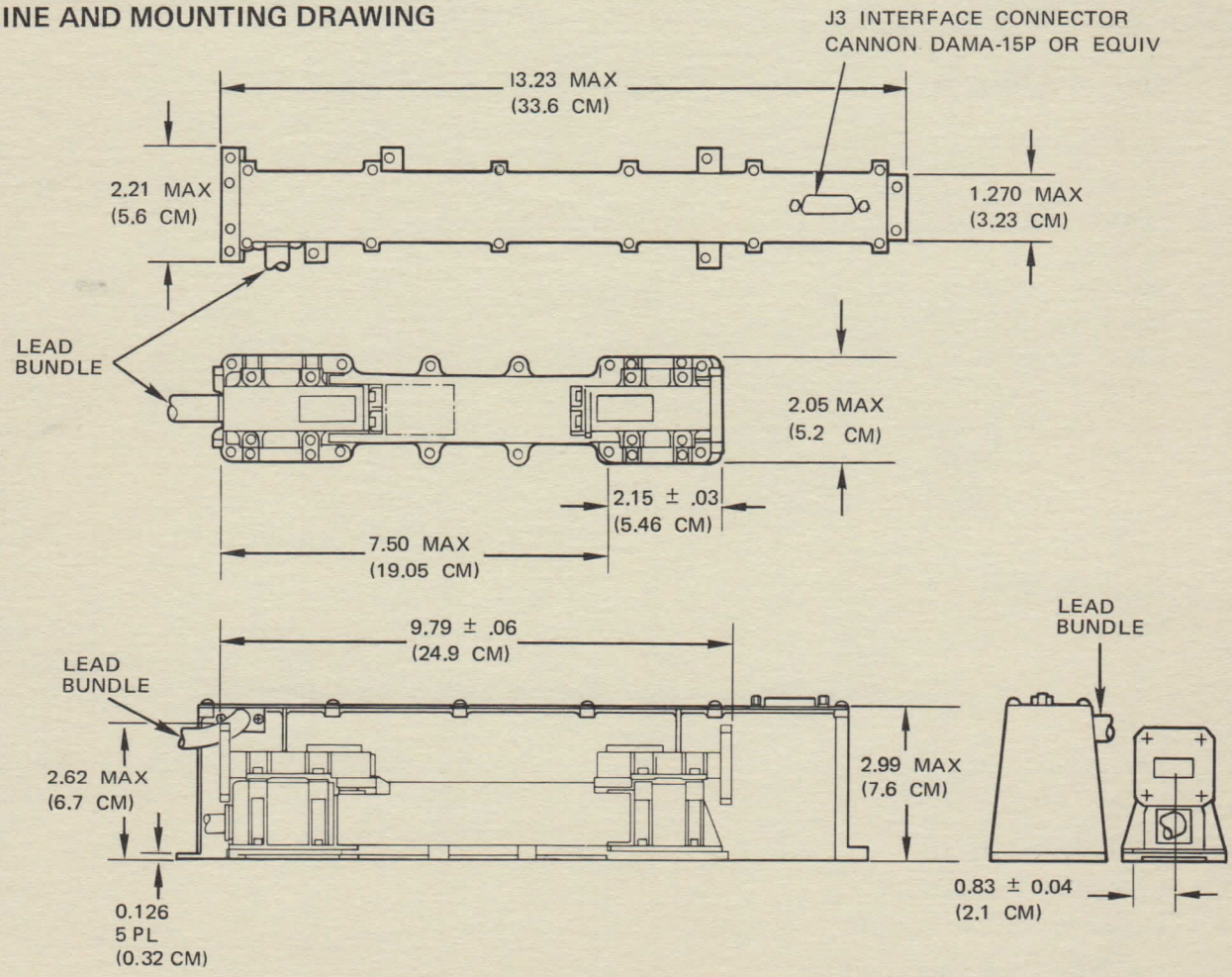

HUGHES ELECTRON DYNAMICS DIVISION 3100 West Lomita Boulevard, Torrance, California 90509, Tel (213) 534-2121

HUGHES AIRCRAFT COMPANY

Printed in U.S.A. 9-78 AL

HUGHES

HUGHES AIRCRAFT COMPANY

ELECTRON DYNAMICS DIVISION

1288H

5 W 3.7 - 4.2 GHz TWTA

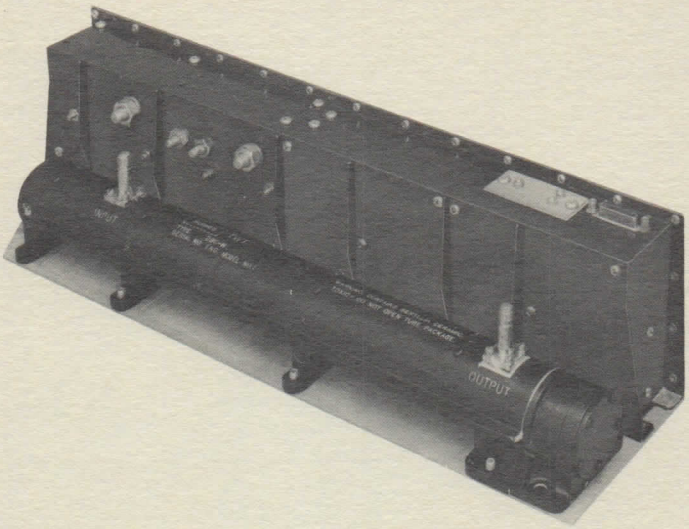

DESCRIPTION

The Hughes Model 1288H is a space qualified traveling-wave tube amplifier developed for communications satellite applications. The small, light-weight amplifier is designed for long life and high reliability. This traveling-wave tube amplifier utilizes the Hughes Model 296H traveling-wave tube.

SPECIFICATIONS*

ELECTRICAL

Frequency	3.7 – 4.2 GHz
Power Output	5 W
Duty	CW
Gain (saturation)	53 dB minimum
Input Voltage	24 – 36 Vdc
Power Consumption	17.7 W maximum
Telemetry (0 – 5 Vdc)	helix current
Noise Figure	28 dB maximum
Spurious Modulation (below carrier output)	60 dB minimum
VSWR	1.6:1 maximum

MECHANICAL

Cooling	conduction
Size	13.25" x 3.5" x 3.3" (33.66cm x 8.89cm x 8.38cm)
Weight	3.75 pounds (1.70kg)
Connectors (RF)	OSM
(dc)	24 pin MCD type

ENVIRONMENTAL

Operating Temperature	0° to 55° C

WARRANTY

Expected Life	7 years

PROTECTIVE FEATURES

Undervoltage
Current Overload

*All specifications are subject to change without prior notice.

1288H

5 W 3.7 - 4.2 GHz TWTA

HUGHES

HUGHES AIRCRAFT COMPANY

ELECTRON DYNAMICS DIVISION

TYPICAL PERFORMANCE CURVE

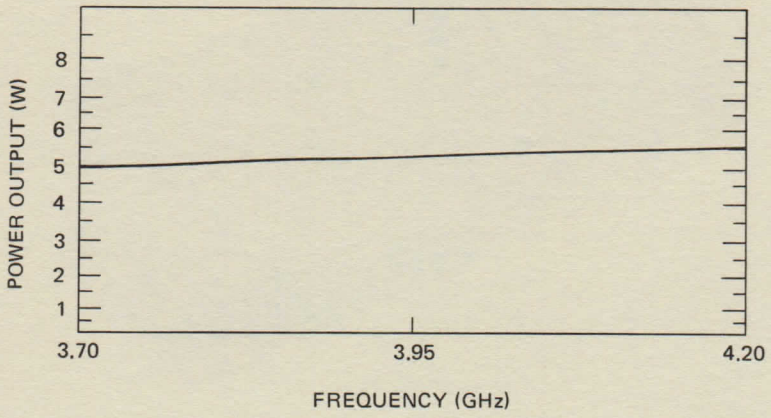

OUTLINE DRAWING

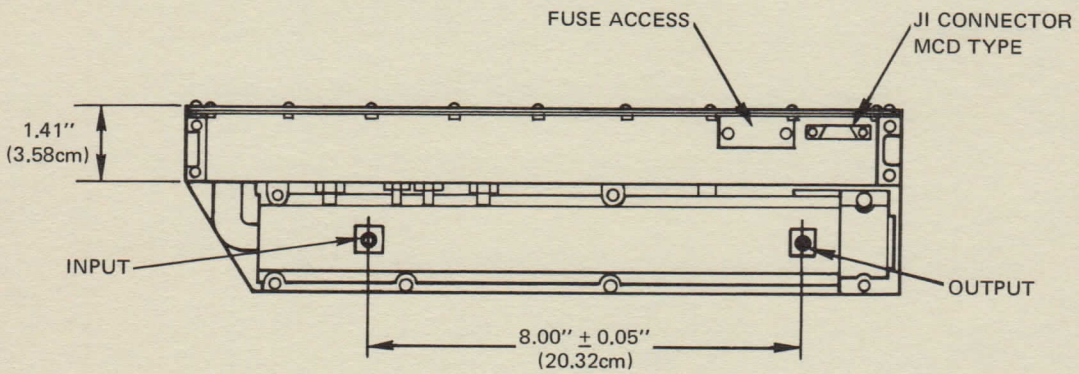

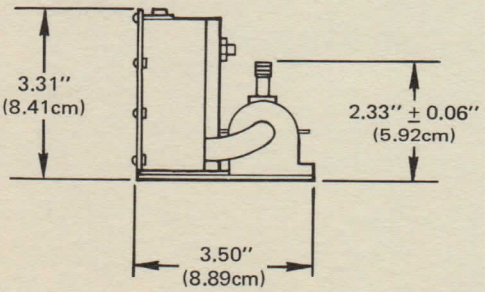

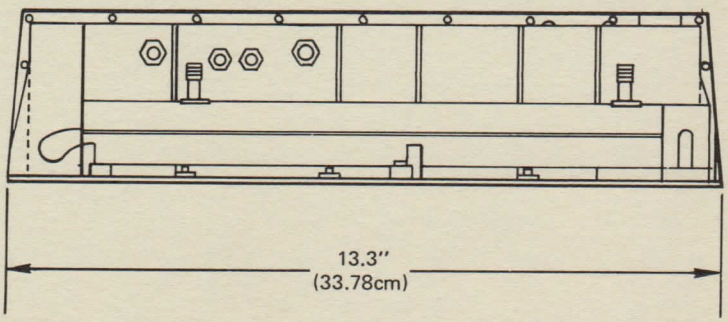

HUGHES
HUGHES AIRCRAFT COMPANY
ELECTRON DYNAMICS DIVISION 3100 West Lomita Boulevard, P.O. Box 2999, Torrance, California 90509, Tel (213) 517-6000

Printed in U.S.A. 3/82 AL

HUGHES

HUGHES AIRCRAFT COMPANY

ELECTRON DYNAMICS DIVISION

1292H

1 W 11.9–12.1 GHz TWTA

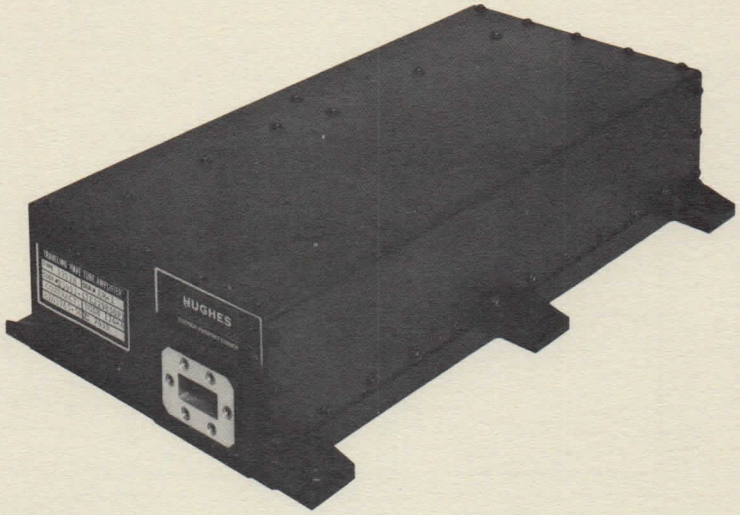

DESCRIPTION

The Hughes Model 1292H is a space qualified, 1 watt driver, traveling-wave tube amplifier developed for the Japanese Broadcast satellite. The small light-weight amplifier is designed for long life and high reliability. The unit utilizes the Hughes Model 837HD traveling-wave tube.

SPECIFICATIONS*

ELECTRICAL

Frequency	11.9 to 12.1 GHz
Power Output	1 W
Duty	CW
Gain Saturation	45 dB
Input Voltage	26 – 29 Vdc
Power Consumption	10 W maximum
Noise Figure	28 dB
Spurious Modulation	$<$55 dB
VSWR (output while opearting)	2:1
Telemetry	helix current (I_W)

MECHANICAL

Cooling	conduction
Size	11.7" x 6.2" x 2.4" (29.72 cm x 15.75 cm x 6.1 cm)
Weight	4.4 pounds (2.0 kg)
Connectors (RF)	WR-75
(dc)	Bendix MS27508E1235P

ENVIRONMENTAL

Operating Temperature	-15° to 55° C
Expected Operating Life	7 years

PROTECTIVE FEATURES

Input Undervoltage Turn-Off

*All specifications subject to change without notice.

1292H

1 W 11.9–12.1 GHz TWTA

HUGHES

HUGHES AIRCRAFT COMPANY

ELECTRON DYNAMICS DIVISION

TYPICAL PERFORMANCE CURVE

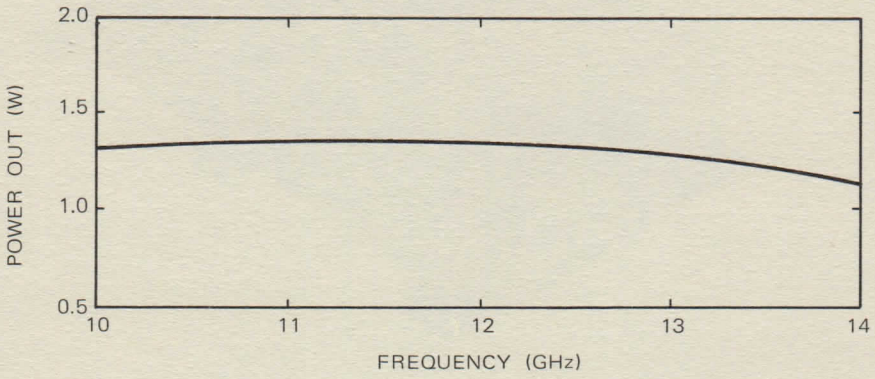

OUTLINE DRAWING

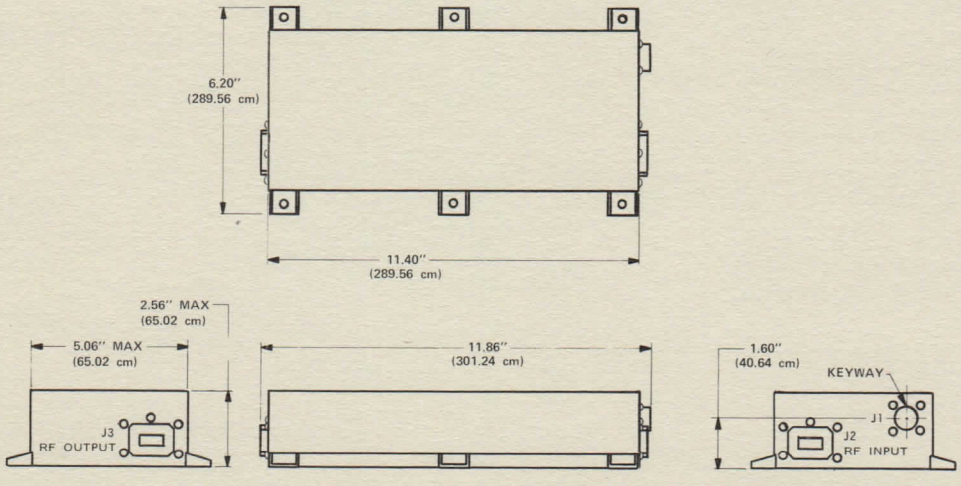

Your Local Representative

HUGHES AIRCRAFT COMPANY — ELECTRON DYNAMICS DIVISION — MICROWAVE TRAVELING-WAVE TUBE PRODUCTS 3100 West Lomita Boulevard, Torrance, California 90509, Tel (213) 534-2121

Printed in U.S.A. 1-76

HUGHES

HUGHES AIRCRAFT COMPANY

ELECTRON DYNAMICS DIVISION

1294H

4 W 17.75–20.25 GHz TWTA

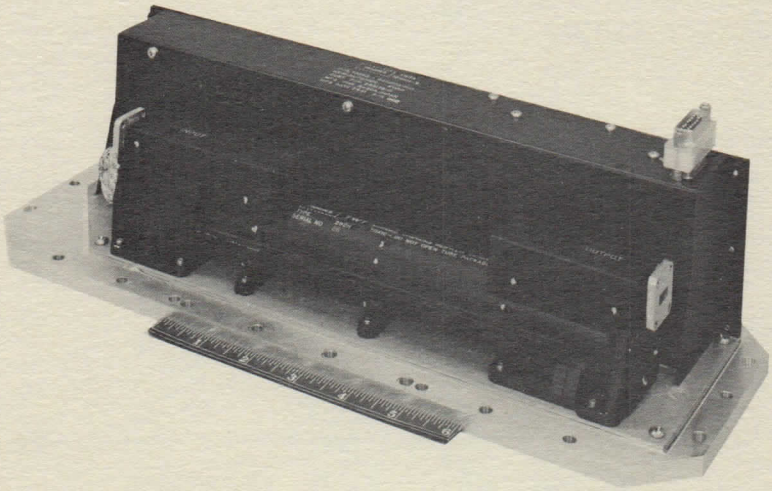

DESCRIPTION

The Hughes Model 1294H is a space qualified 4 watt traveling-wave tube amplifier used for communications satellite applications. This long life, high reliability unit utilizes the Hughes Model 292H traveling-wave tube.

SPECIFICATIONS*

ELECTRICAL

Frequency	17.75 to 20.25 GHz
Power Output	4 W
Duty	CW
Gain Saturation	50 dB
Input Voltage	24 – 32 Vdc
Power Consumption	23 W maximum
Noise Figure	30 dB
Spurious Modulation	< 55 dB
Output VSWR (operating)	2.5:1
Telemetry	helix current

MECHANICAL

Cooling	conduction
Size	13.25" x 4.2" x 3.5" (33.65 cm x 10.66 cm x 8.89 cm)
Weight	4.8 pounds (2.17 kg)
Connectors (RF)	M3922/54-1
(dc)	Cannon DBMA-15P

ENVIRONMENTAL

Operating Temperature	-10° to 50° C
Expected Operating Life	7 years

PROTECTIVE FEATURES

- Input Over/Undervoltage Turn-Off
- Over Current Turn-Off

*All specifications subject to change without notice.

1294H

4 W 17.75–20.25 GHz TWTA

HUGHES

HUGHES AIRCRAFT COMPANY

ELECTRON DYNAMICS DIVISION

TYPICAL PERFORMANCE CURVE

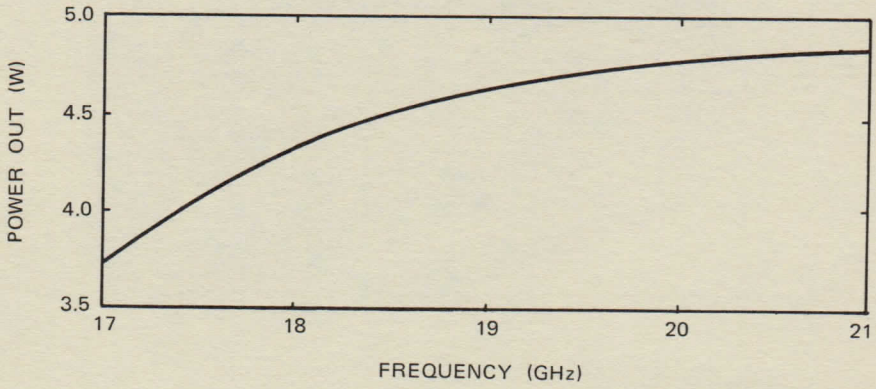

OUTLINE DRAWING

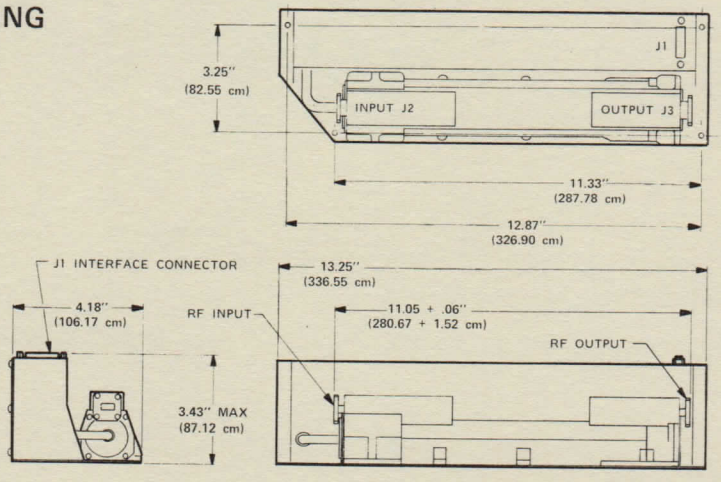

HUGHES
HUGHES AIRCRAFT COMPANY
ELECTRON DYNAMICS DIVISION 3100 West Lomita Boulevard, P.O. Box 2999, Torrance, California 90509, Tel (213) 517-6000

Printed in U.S.A. 3/82 AL

HUGHES

HUGHES AIRCRAFT COMPANY

ELECTRON DYNAMICS DIVISION

1652H

16 W 3.7—4.2 GHz TWTA

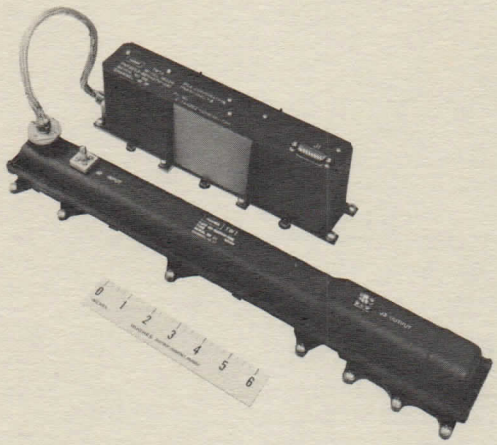

DESCRIPTION

The Hughes Model 1652H traveling-wave tube amplifier is a 16 watt C-band TWTA designed and built for the SPACENET spacecraft. Its high efficiency, long life design makes it suitable for space communication applications. The TWTA utilizes the 8515H traveling-wave tube.

SPECIFICATIONS*

Frequency	3.7 to 4.2 GHz
Power Output	16 W minimum
Duty	CW
Gain (saturation)	63 dB
Input Voltage	+22.5 to +36 Vdc
Power Consumption	46 W
Noise Figure	28 dB maximum
Spurious Modulation	PM -60 dBc, AM -60 dB
Input VSWR (hot)	2.0:1 or less
Output VSWR (cold)	1.5:1 or less
Telemetry	helix current
Cathode	oxide

Mechanical

Cooling	conduction
Size:	
TWT	2.0 inches (5.08 cm) high x 2.5 inches (6.35 cm) wide x 17 inches (43.18 cm) long
EPC	3.5 inches (8.89 cm) high x 2.0 inches (5.08 cm) wide x 10 inches (25.4 cm) long
Weight:	
TWT	2.5 pounds (1.14 kg) maximum
EPC	2.0 pounds (0.91 kg) maximum
TWTA	4.5 pounds (2.05 kg) maximum
RF Connectors	SMA
DC Connectors	Cannon D

Environmental

Operating Temperature	
TWT	+23°C to +74°C
EPC	0°C to +50°C

Warranty

Expected Life	10 years

Protective Features

Under voltage, over voltage, input bus over-current, helix over-current.

*Subject to change without prior notice.

1652H

16 W 3.7—4.2 GHz TWTA

HUGHES

HUGHES AIRCRAFT COMPANY

ELECTRON DYNAMICS DIVISION

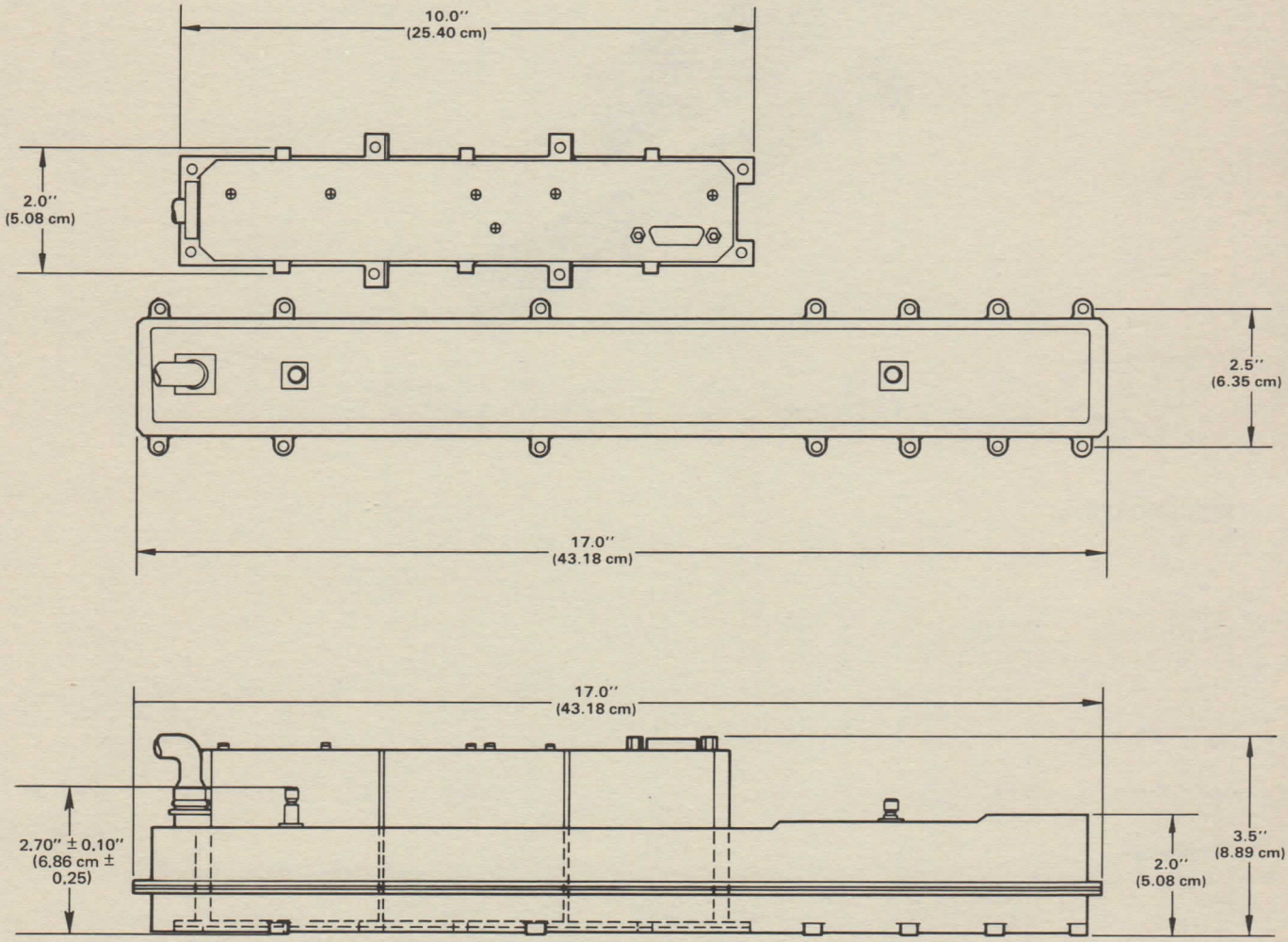

HUGHES ELECTRON DYNAMICS DIVISION 3100 West Lomita Boulevard, P.O. Box 2999, Torrance, California 90509, Tel (213) 517-6000

HUGHES AIRCRAFT COMPANY

Printed in U.S.A. 10/83

HUGHES

HUGHES AIRCRAFT COMPANY

ELECTRON DYNAMICS DIVISION

1653H

16 W 11.7—12.2 GHz TWTA

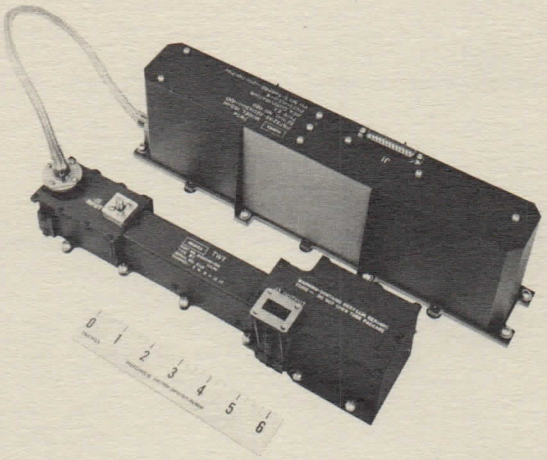

DESCRIPTION

The Hughes Model 1653H traveling-wave tube amplifier is a 16 watt Ku-band TWTA designed and built for the SPACENET spacecraft. Its high efficiency, long life design makes it suitable for space communication applications. The TWTA utilizes the 8516H traveling-wave tube.

SPECIFICATIONS*

Frequency	11.7 to 12.2 GHz
Power Output	16 W minimum
Duty	CW
Gain (saturation)	55 dB
Input Voltage	+22.5 to +36 Vdc
Power Consumption	49 W
Noise Figure	32 dB maximum
Spurious Modulation	PM -60 dBc, AM -60 dB
Input VSWR (hot)	2.0:1 or less
Output VSWR (cold)	1.5:1 or less
Telemetry	helix current
Cathode	oxide

Mechanical

Cooling	conduction
Size:	
TWT	2.5 inches (6.35 cm) high x 2.5 inches (6.35 cm) wide x 12 inches (30.48 cm) long
EPC	4 inches (10.16 cm) high x 3 inches (7.62 cm) wide x 13 inches (33.02 cm) long
Weight:	
TWT	2.5 inches (6.35 cm) high x 2.5 inches (6.35 cm) wide x 12 inches (30.48 cm) long
EPC	4 inches (10.16 cm) high x 3 inches (7.62 cm) wide x 13 inches (33.02 cm) long
TWTA	6.1 pounds (2.77 kg) maximum
RF Connectors	SMA
DC Connectors	Cannon D

Environmental

Operating Temperature	
TWT	$+23^{o}C$ to $+74^{o}C$
EPC	$0^{o}C$ to $+50^{o}C$

Warranty

Expected Life	10 years

Protective Features

Under voltage, over voltage, input bus over-current, helix over-current.

*Subject to change without prior notice.

1653H

16 W 11.7—12.2 GHz TWTA

HUGHES

HUGHES AIRCRAFT COMPANY

ELECTRON DYNAMICS DIVISION

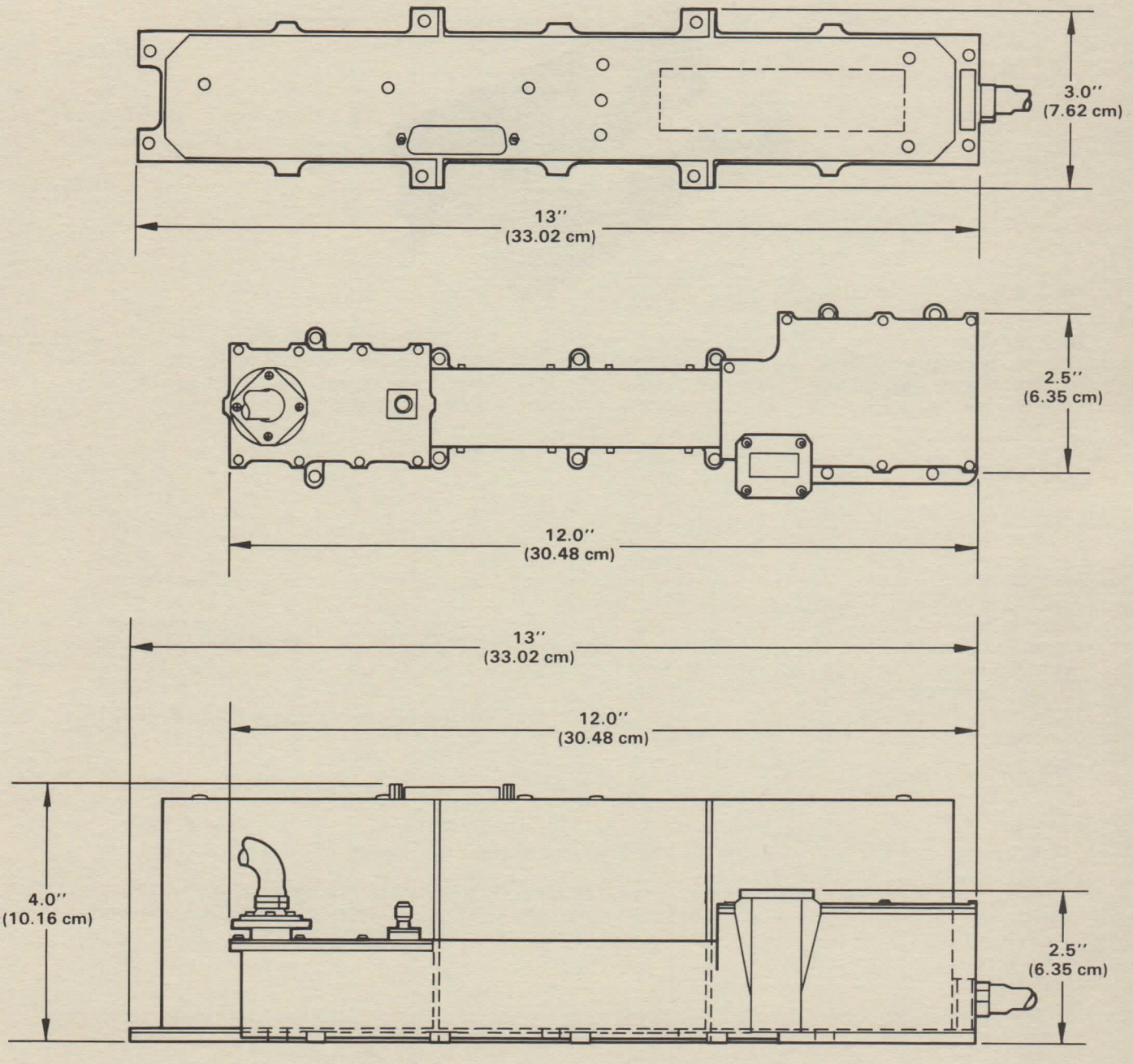

HUGHES ELECTRON DYNAMICS DIVISION 3100 West Lomita Boulevard, P.O. Box 2999, Torrance, California 90509, Tel (213) 517-6000

HUGHES AIRCRAFT COMPANY

Printed in U.S.A. 10/83 AL

HUGHES

HUGHES AIRCRAFT COMPANY

ELECTRON DYNAMICS DIVISION

1654H

20 W 11.7—12.2 GHz TWTA

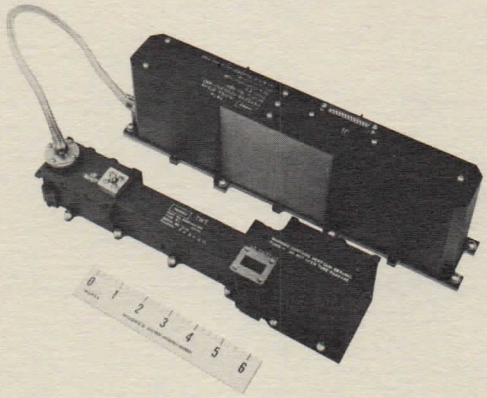

DESCRIPTION

The Hughes Model 1654H traveling-wave tube amplifier is a 20 watt Ku-band unit designed and built for the GSTAR spacecraft. Its high efficiency, long life design makes it suitable for space communication applications. The TWTA ultilizes the 8517H traveling-wave tube.

SPECIFICATIONS*

Frequency	11.7 to 12.2 GHz
Power Output	20 W minimum
Duty	CW
Gain (saturation)	56 dB
Input Voltage	+22.5 to +35.5 Vdc
Power Consumption	64.8 W
Noise Figure	32 dB maximum
Spurious Modulation	PM -60 dBc, AM -60 dB
Input VSWR (hot)	2.2:1 or less
Output VSWR (cold)	1.5:1 or less
Telemetry	helix current
Cathode	oxide

Mechanical

Cooling	conduction
Size:	
TWT	2.5 inches (6.35 cm) high x 2.5 inches (6.35 cm) wide x 12 inches (30.48 cm) long
EPC	4 inches (10.16 cm) high x 3 inches (7.62 cm) wide x 13 inches (33.02 cm) long
Weight:	
TWT	1.7 pounds (0.77 kg) maximum
EPC	4.1 pounds (1.86 kg) maximum
TWTA	5.8 pounds (2.63 kg) maximum
RF Connectors	SMA
DC Connectors	Cannon D

Environmental

Operating Temperature	
TWT	+23°C to +74°C
EPC	0°C to +50°C

Warranty

Expected Life	10 years

Protective Features

Under voltage, over voltage, input bus over-current, helix over-current.

*Subject to change without prior notice.

1654H

20 W 11.7—12.2 GHz TWTA

HUGHES

HUGHES AIRCRAFT COMPANY

ELECTRON DYNAMICS DIVISION

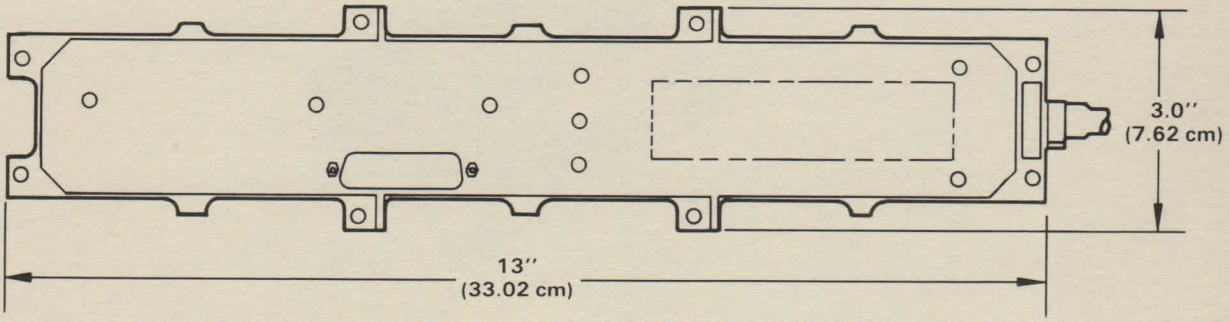

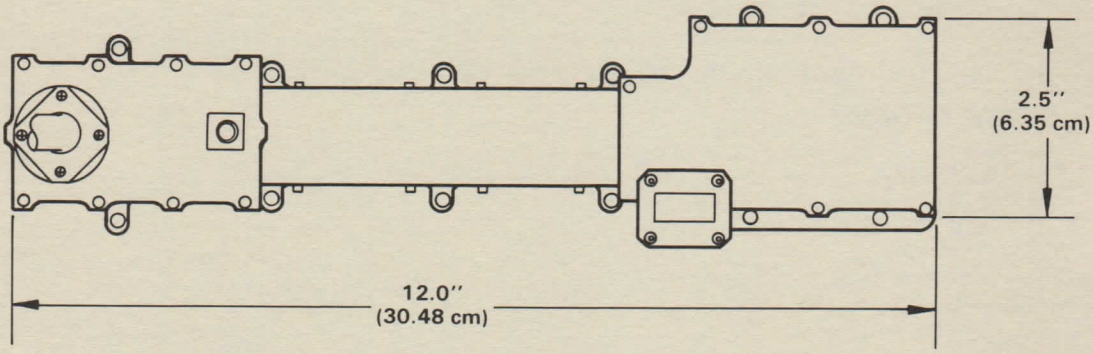

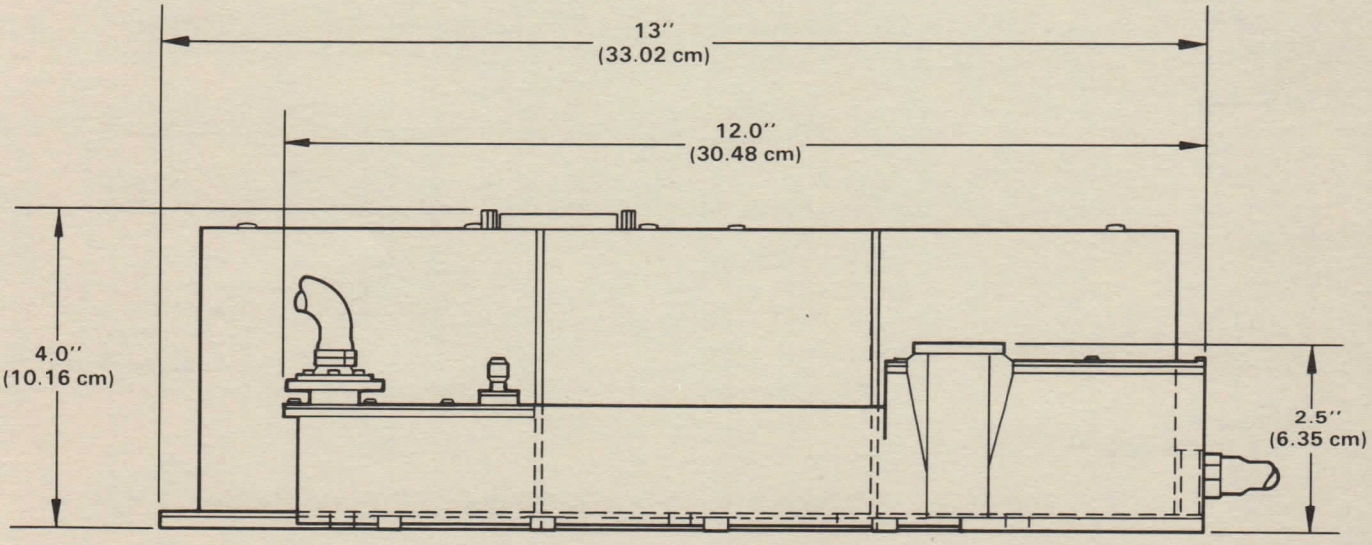

HUGHES ELECTRON DYNAMICS DIVISION 3100 West Lomita Boulevard, P.O. Box 2999, Torrance, California 90509, Tel (213) 517-6000

HUGHES AIRCRAFT COMPANY

Printed in U.S.A. 10/83

HUGHES

HUGHES AIRCRAFT COMPANY

ELECTRON DYNAMICS DIVISION

1655H

27 W 11.7–12.2 GHz TWTA

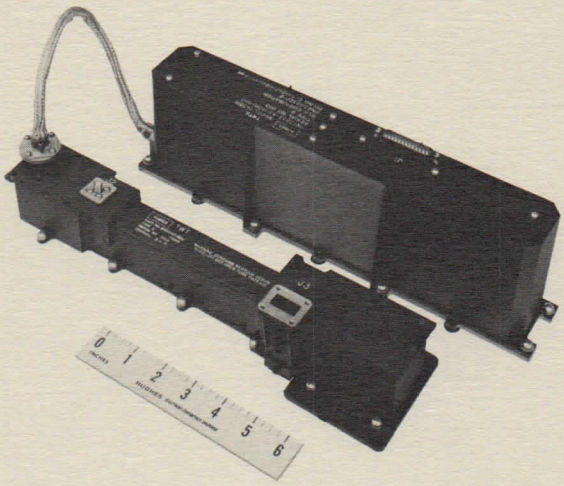

DESCRIPTION

The Hughes Model 1655H traveling-wave tube amplifier is a 27 watt Ku-band unit designed and built for the GSTAR spacecraft. Its high efficiency, long life design makes it suitable for space communication applications. The TWTA utilizes the 8518H traveling-wave tube.

SPECIFICATIONS*

Frequency	11.7 to 12.2 GHz
Power Output	27 W minimum
Duty	CW
Gain (saturation)	56 dB
Input Voltage	+22.5 to +35.5 Vdc
Power Consumption	93.8 W
Noise Figure	32 dB maximum
Spurious Modulation	PM -60 dBc, AM -60 dB
Input VSWR	2.2:1 or less
Output VSWR	1.5:1 or less
Telemetry	helix current
Cathode	dispenser (M)

Mechanical

Cooling	conduction
Size:	
TWT	2.5 inches (6.35 cm) high x 3.0 inches (7.62 cm) wide x 13 inches (33.02 cm) long
EPC	4.0 inches (10.16 cm) high x 3.0 inches (7.62 cm) wide x 13 inches (33.02 cm) long
Weight:	
TWT	2.0 pounds (0.91 kg) maximum
EPC	4.4 pounds (2.0 kg) maximum
TWTA	6.4 pounds (2.91 kg) maximum
RF Connectors	SMA
DC Connectors	Cannon D

Environmental

Operating Temperature	
TWT	$23^{o}C$ to $74^{o}C$
EPC	$0^{o}C$ to $50^{o}C$

Warranty

Expected Life	10 years

Protective Features

Under voltage, over voltage, input bus over-current, helix over-current.

*Subject to change without prior notice.

1655H

27 W 11.7—12.2 GHz TWTA

HUGHES

HUGHES AIRCRAFT COMPANY

ELECTRON DYNAMICS DIVISION

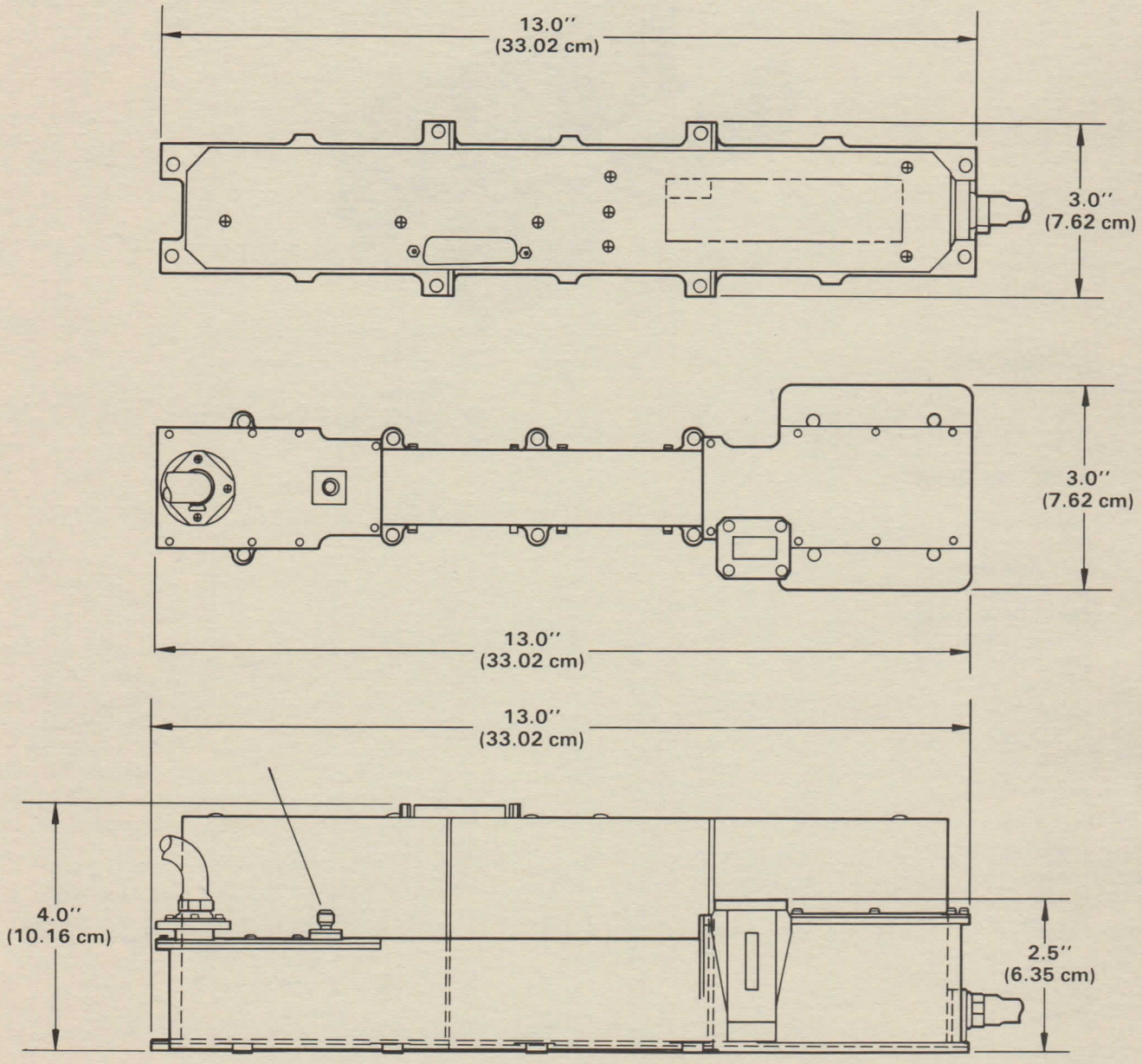

HUGHES ELECTRON DYNAMICS DIVISION 3100 West Lomita Boulevard, P.O. Box 2999, Torrance, California 90509, Tel (213) 517-6000

HUGHES AIRCRAFT COMPANY

Printed in U.S.A. 10/83 AL

HUGHES

HUGHES AIRCRAFT COMPANY

ELECTRON DYNAMICS DIVISION

9020H-04 COMMUNICATIONS POWER AMPLIFIER

14 GHz 20 Watts

DESCRIPTION

The Hughes Model 9020H-04 communications power amplifier provides an RF output of 20 watts in a basic configuration and 15 to 20 watts when an output isolator, filter and power monitors are included. This amplifier is designed to operate in the 14 GHz satellite up-link band as an intermediate power amplifier or output power amplifier. Two typical configurations are shown on the reverse side. Other configurations are available to meet individual satellite earth station transmitter requirements.

TYPICAL PERFORMANCE CHARACTERISTICS

RF	
Frequency	14.0 to 14.5 GHz
Bandwidth	500 MHz
Power Output	
At TWT (typical)	21 W
At Amplifier Output (nominal)	20 W
Gain	
At 20 Watts (minimum)	50 dB
At 20 Watts (typical)	53 dB
Small Signal (typical)	59 dB
Gain Flatness (any 85 MHz band, saturated)	±0.25 dB
Gain Slope	±0.05 dB/MHz
AM/PM	5°/dB at saturation
Harmonic Output (without filter)	> 6 dBc at saturation
Spurious Outputs	> 65 dBc
Residual AM	> −50 dBc
Residual FM	> −50 dB below 10 kHz peak deviation
ELECTRICAL	
Remote Control/Monitor	refer to block diagrams on reverse side
MECHANICAL*	
Weight	20 pounds (9.07 kg) (basic configuration)

*Input = Coaxial (OSM)
Output = Waveguide (WR-62)

9020H-04
COMMUNICATIONS POWER AMPLIFIER
14 GHz 20 Watts

HUGHES
HUGHES AIRCRAFT COMPANY
ELECTRON DYNAMICS DIVISION

TYPICAL BLOCK DIAGRAMS

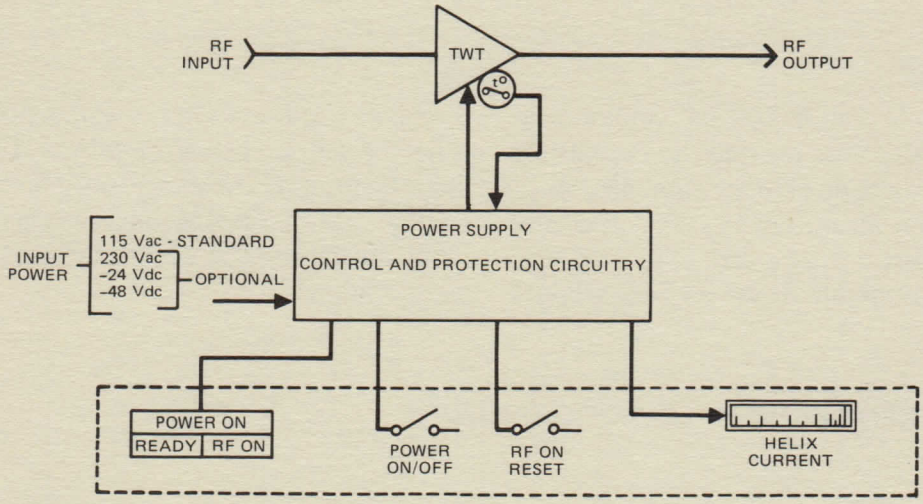

BASIC AMPLIFIER CONFIGURATION

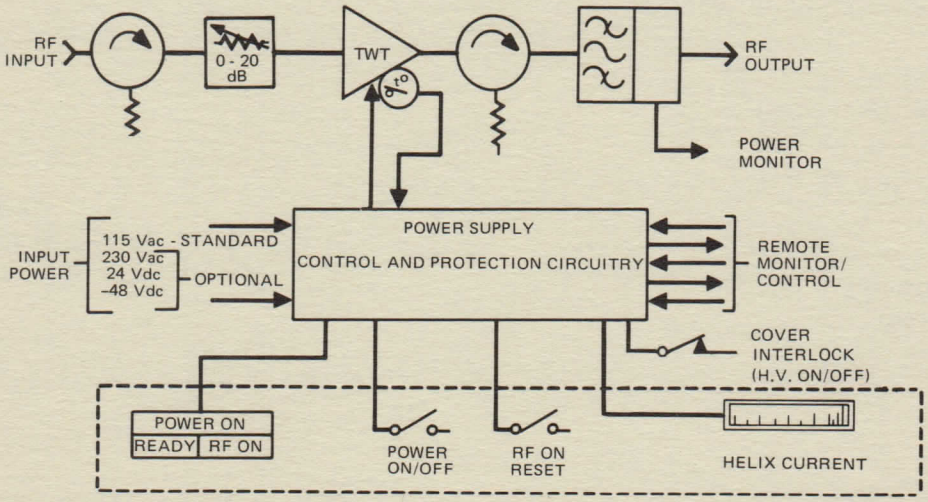

POWER AMPLIFIER CONFIGURATION

Specifications are subject to change without prior notice.

HUGHES
HUGHES AIRCRAFT COMPANY
ELECTRON DYNAMICS DIVISION / 3100 W. LOMITA BLVD. TORRANCE, CA.90509/TEL (213) 534-2121

Printed in U.S.A. 9-75

HUGHES

HUGHES AIRCRAFT COMPANY

ELECTRON DYNAMICS DIVISION

9225H-04 COMMUNICATIONS HPA SUBSYSTEM 14 GHz 250 W

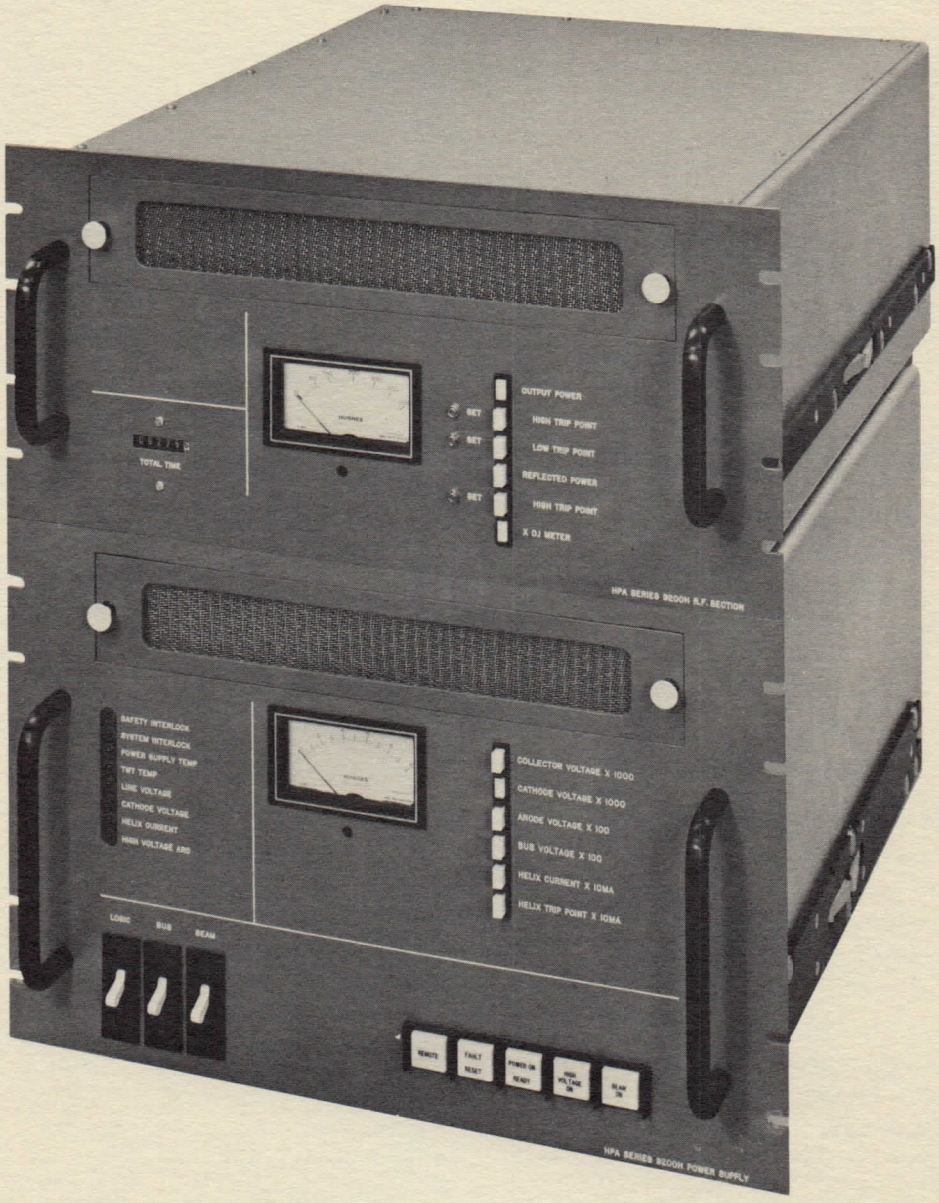

FEATURES

- High Reliability
- Automatic Recycle Provisions
- Protective Features
- Low Power Consumption (<2 kVA)
- Fault Indicators
- Remote-Local Control
- Operational Status Indicators
- Rugged Metal-Ceramic Traveling-wave Tube
- Integral Cooling Systems
- Ease of Maintenance
- Full One Year Warranty — No Hour Limit
- Optional Redundant Control Unit

DESCRIPTION

The Hughes Model 9225H-04 Communications Power Amplifier Subsystem consists of two assemblies; the RF and power conditioner drawers. The RF drawer contains the Hughes Model 880H TWT and associated RF components. The power conditioner drawer generates the necessary voltages for the RF drawer and contains all the logic and control functions. This subsystem is designed to operate as the output transmitter in a commercial satellite communication system The design takes into account all ICSC transmission requirements.

OPERATIONAL FEATURES

RF DRAWER

Time-totalizer (filament on time)

- Non-resettable

Controls

- Variable RF Input Attenuator (0 to -20 dB)
- Output Power (forward)
  - High Trip Point Set
  - Low Trip Point Set
- Reflected Power
  - High Trip Point Set

Metering

- Output Power
- High Trip Point (forward)
- Low Trip Point (forward)
- Reflected Power
- High Trip Point (reflected)
- Meter Multiplier

RF Signal Sample Output (–50dBc)

RF Power Alarm Output Connector (rear panel)

- High Output Power Alarm
- Low Output Power Alarm
- High Reflected Power Alarm

ELECTRONIC POWER CONDITIONER DRAWER

Operational Status Indicators (front panel)

- Power on
- Ready
- High Voltage on
- Beam on
- Fault
- Remote
- Reset

Remote Control Interface Connector (rear panel)

- All operational status indicators and control switches can be switched to a remote control interface connector to provide a ready means of remote control and status indication.

Protection

- Prime Power Circuit Breakers (three)
- TWT Warm-up Time Delay
- Automatic Sequencing of High Voltage and Beam Current
- Helix Current Overload
- High Voltage Arc
- High or Low Cathode Voltage
- High Temperature (TWT and power supply)
- High or Low Line Voltage
- High Reflected Power (thermal cutout)
- System and Safety Interlocks

Metering

- Collector Voltage
- Cathode Voltage
- Anode Voltage
- Bus Voltage
- Helix Current
- Helix Current Trip Point

Control Switches

- Power On-Off
- High Voltage On-Off
- Beam On-Off
- Remote-Local (rear panel)
- Fault/Reset

Fault Indicators

- Helix Current Overload
- High Voltage Arc
- High Temperature, TWT
- High Temperature, Power Supply
- High or Low Line Voltage
- High or Low Cathode Voltage
- System Interlock Open
- Safety Interlock Open

Automatic Recycle Provisions

- Selectable 2, 4, or 8 faults

SPECIFICATIONS*

RF Performance (typical)

Frequency	14.0 to 14.5 GHz
Bandwidth	500 MHz minimum
Power Output (CW)	225 W minimum
Gain (with solid state driver)	
At Rated Power	56 dB minimum
Small Signal	62 dB minimum
Stability	±0.25 dB/24 hours
Control (continuous)	0 to −20 dB
Settability	±0.2 db
Variation (over 500 MHz band)	±1.5 dB maximum**
Slope (over 50 MHz band)	0.02 dB/MHz maximum**
Gain (without solid state driver)	
At Rated Power	41 dB minimum
Small Signal	47 dB minimum
Group Delay (any 50 MHz band)	
Parabolic	0.05 ns/MHz^2 maximum
Linear	0.1 ns/MHz maximum
Ripple	1.0 ns peak-to-peak maximum
VSWR	
Input	1.3:1 maximum
Output (non-operating)	1.2:1 maximum
Load (normal operation)	2.0:1 maximum
AM/PM Conversion (@ rated power)	6°/dB maximum
Noise and Spurious	
9.4 to 18.0 GHz	−65 dBW/4 kHz maximum
18.0 to 40 GHz	−110 dBW/MHz maximum
Noise Figure	
With Solid State Driver	20 dB maximum
Without Solid State Driver	35 dB maximum
Residual AM (referred to single carrier at rated output power)	
Below 10 kHz	−40 dB maximum
10 kHz to 500 kHz	$-20\ (1 + \log_{10} f)$ dB maximum
Above 500 kHz	−80 dB maximum
Residual FM	−60 dBc maximum
Harmonic Output (at rated output power)	−60 dBc maximum
IM (3rd Order two equal carriers, (3 W each)	−25 dB maximum

Electrical

Input Voltage	120/240 VAC ± 10% 50/60 HZ ± 5% single phase, 3 wire
Input Power	1.5 kVA
Power Factor	0.9
Efficiency (typical at saturation)	20%

Mechanical

Cooling (integral blowers)	forced air
Weight	
RF Drawer	45 pounds (22.7 kg) maximum
Power Conditioner Drawer	120 pounds (54.4 kg) maximum
Dimensions	
RF Drawer	19 inches wide X 8 3/4 inches high X 24 inches deep (48.3 cm X 22.2 cm X 61.0 cm)
Power Conditioner Drawer	19 inches wide X 12 1/4 inches high X 22 inches deep (48.3 cm X 31.1 cm X 55.9 cm)
Mounting	rack with non-tilting chassis slides
Connectors	
RF Input	UG 419/U
RF Output	UG 419/U
RF Signal Sample	type N female

Environmental

Temperature (operating)	0 to +50° C
Relative Humidity (without condensation)	95% maximum
Altitude	10,000 feet maximum***
Shock and Vibration	as normally encountered in commercial shipping and handling

*Specifications subject to change without prior notice.

**Measured with 0 dB input attenuation.

***40°C maximum operating temperature above 6,000 ft.

BLOCK DIAGRAMS

Typical RF Drawer

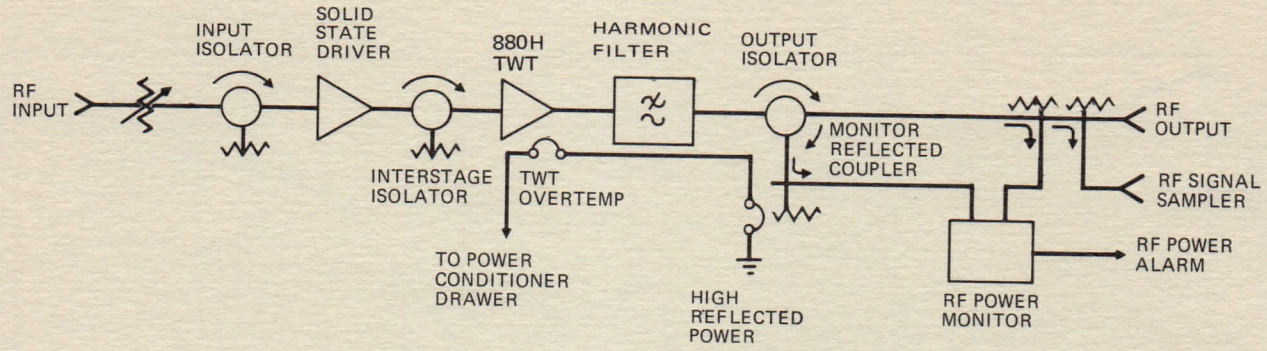

RF Components

- Input Isolator
- Input Variable Attenuator (0 to –20 dB)
- Output Harmonic Filter (Optional)
- Output Isolator, Terminated
- Reflected Power Monitor
- Forward Power Monitor
- Solid State Driver Amplifier (Optional)
- Interstage Isolator

Power Conditioner Drawer

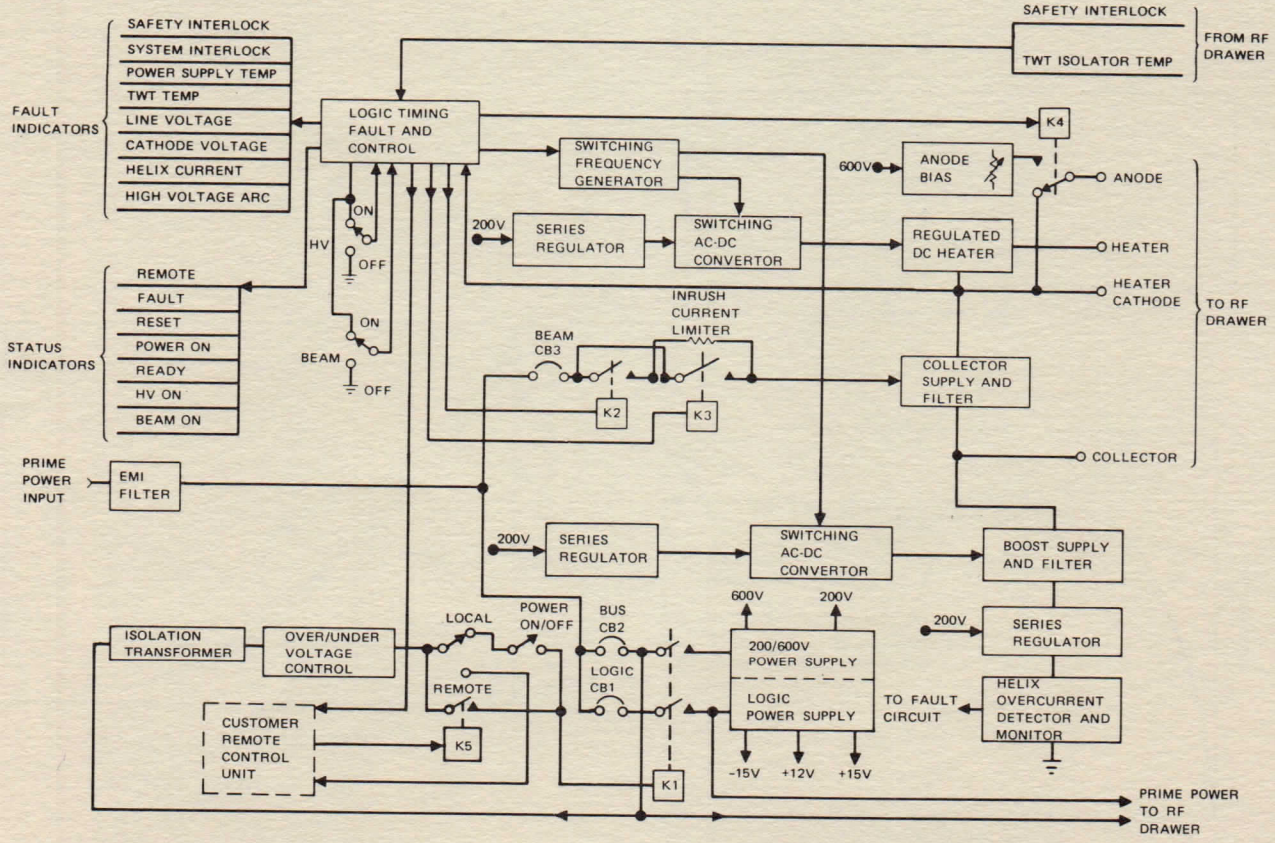

EPC SIMPLIFIED BLOCK DIAGRAM

TYPICAL PERFORMANCE CURVES *

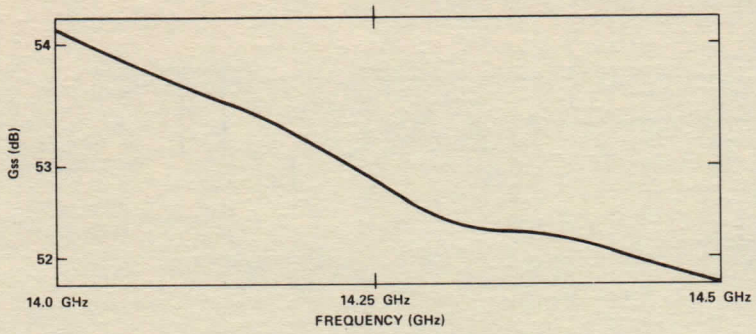

SMALL SIGNAL GAIN VS FREQUENCY
–10 dB BELOW SATURATION

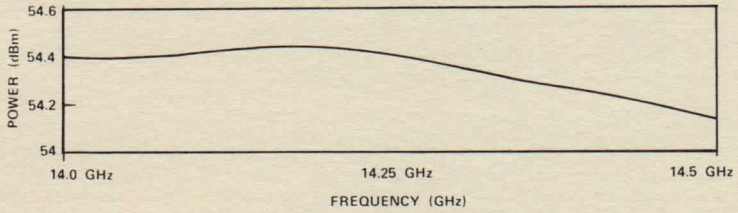

SATURATED POWER OUTPUT VS FREQUENCY

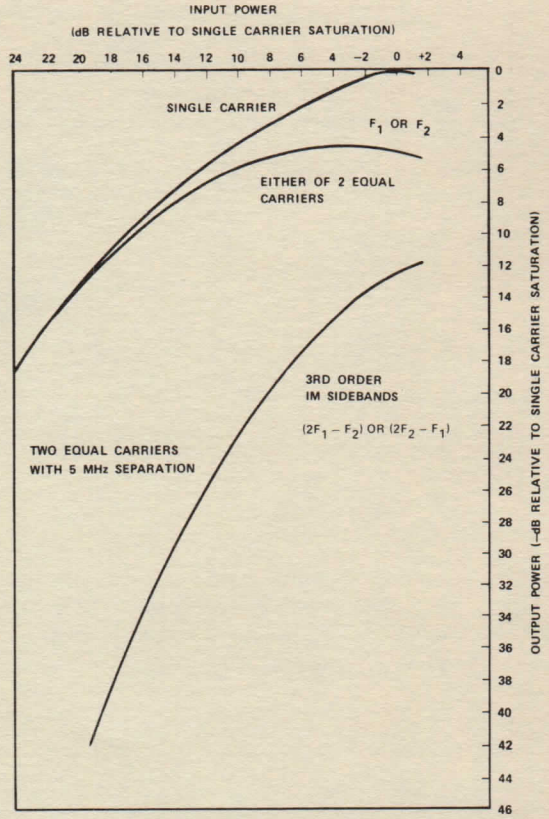

INTERMODULATION DISTORTION

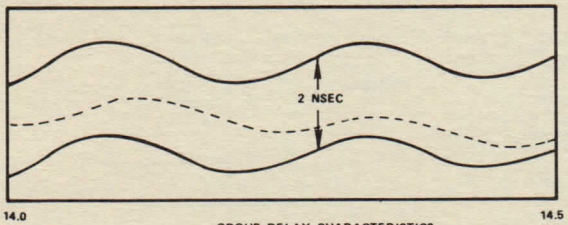

GROUP DELAY CHARACTERISTICS

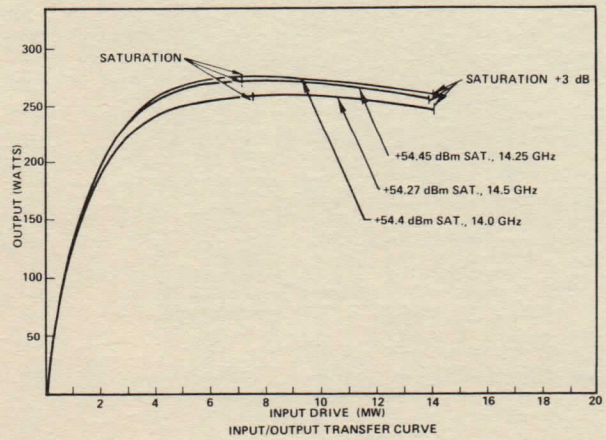

INPUT/OUTPUT TRANSFER CURVE
MODEL 880 H

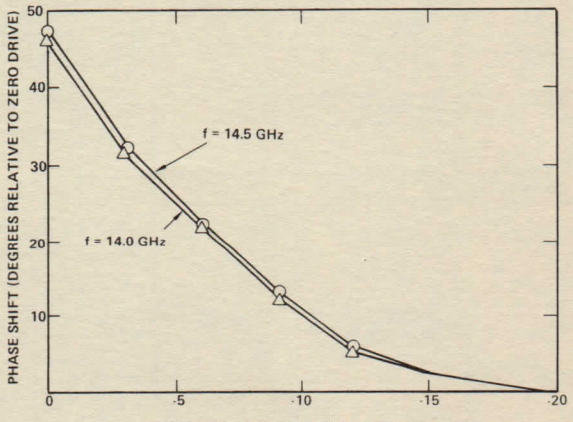

PHASE SHIFT VERSUS DRIVE

*Without Solid State Driver

9225H-04 COMMUNICATIONS HPA SUBSYSTEM 14 GHz 250 W

HUGHES

HUGHES AIRCRAFT COMPANY

ELECTRON DYNAMICS DIVISION

OUTLINE DRAWINGS

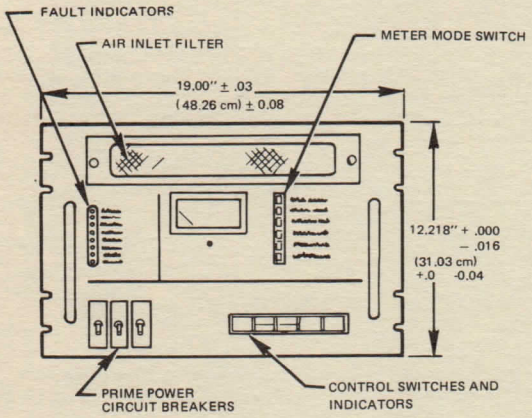

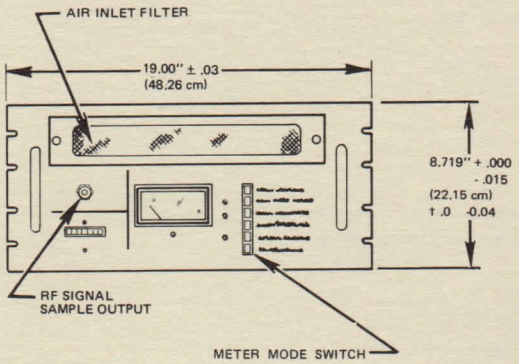

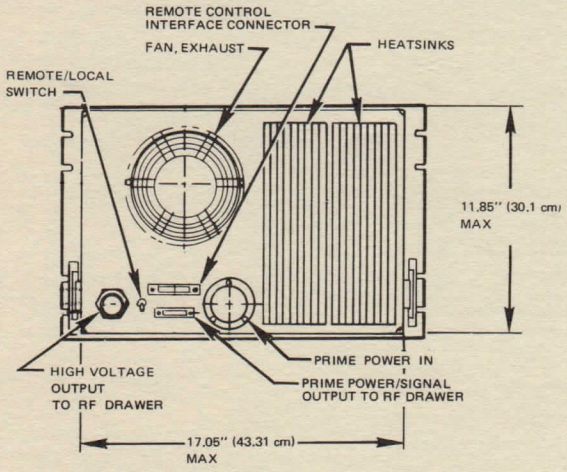

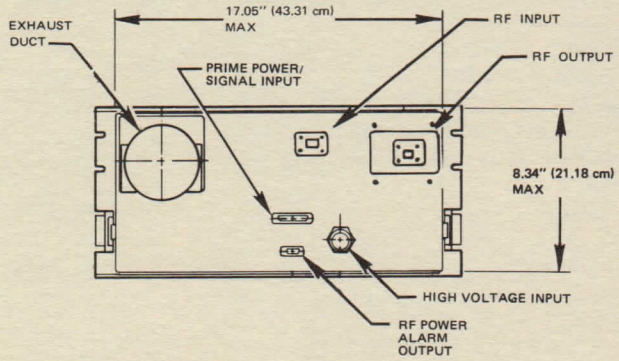

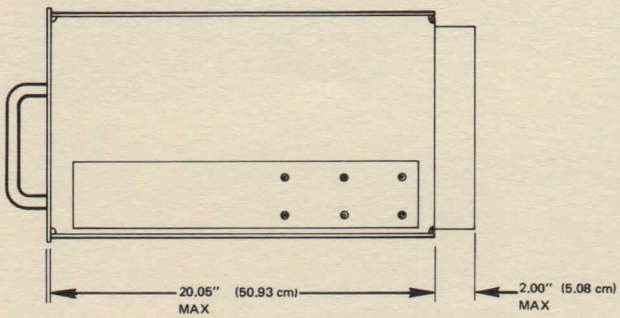

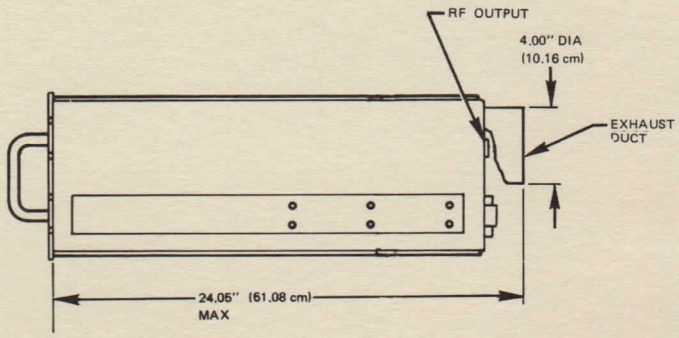

HUGHES
HUGHES AIRCRAFT COMPANY
ELECTRON DYNAMICS DIVISION 3100 West Lomita Boulevard, Torrance, California 90509, Tel (213) 534-2121

PRINTED IN USA 7/78

HUGHES

HUGHES AIRCRAFT COMPANY

ELECTRON DYNAMICS DIVISION

9240H-02 COMMUNICATIONS HPA SUBSYSTEM 6 GHz 400 W

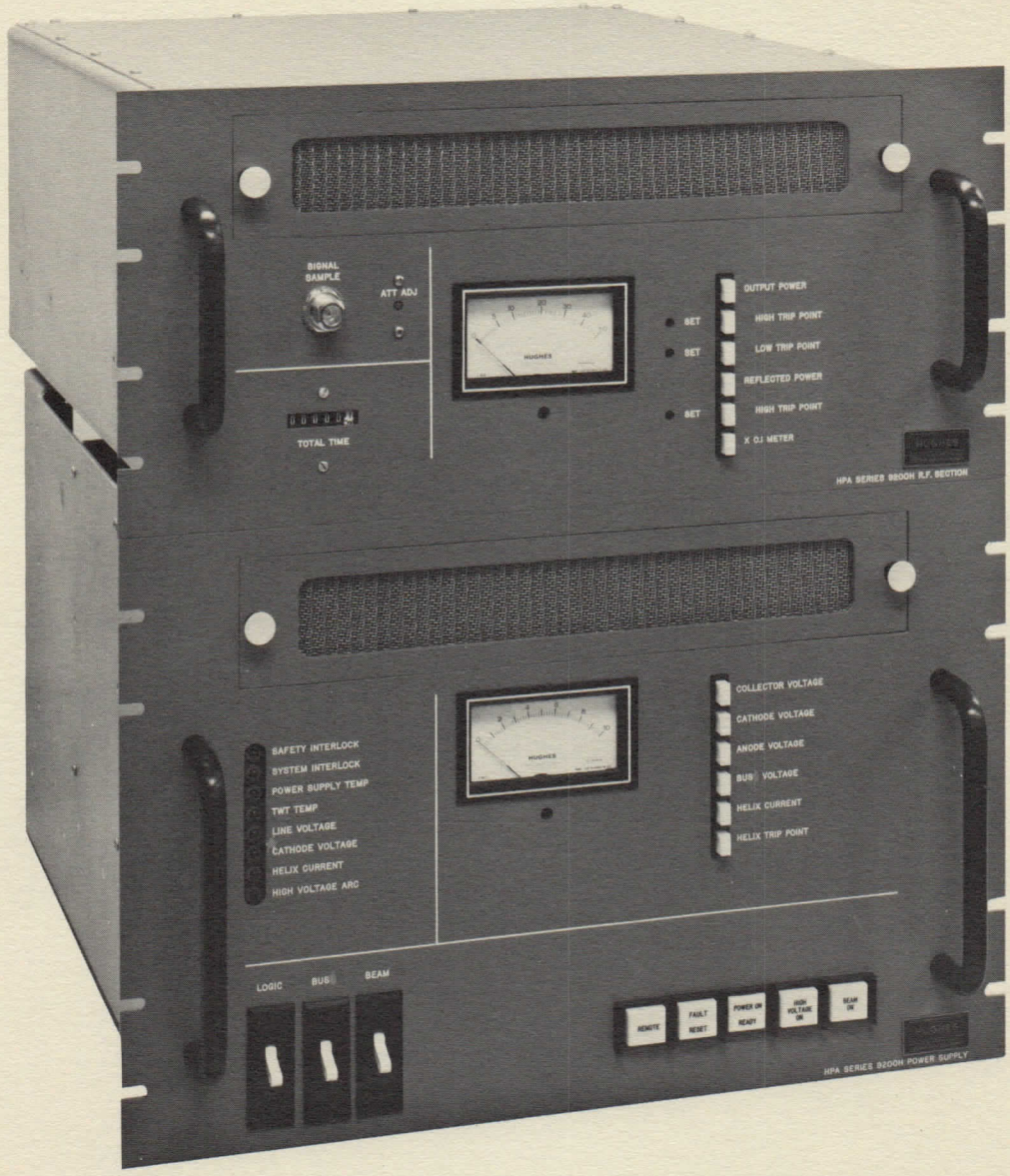

FEATURES

- High Reliability
- Automatic Recycle Provisions
- Protective Features
- Low Power Consumption (<2 kVA)
- Fault Indicators
- Remote-Local Control
- Operational Status Indicators
- Rugged Metal-Ceramic Traveling-wave Tube
- Integral Cooling Systems
- Ease of Maintenance
- Full One Year Warranty — No Hour Limit

DESCRIPTION

The Hughes Model 924OH-02 Communications Power Amplifier Subsystem consists of two assemblies; the RF and power conditioner drawers. The RF drawer contains the Hughes Model 662H TWT and associated RF components. The power conditioner drawer generates the necessary voltages for the RF drawer and contains all the logic and control functions. This subsystem is designed to operate as the ground transmitter in a commercial satellite communication system. The design takes into account all ICSC transmission requirements.

OPERATIONAL FEATURES

RF DRAWER

Time-totalizer (filament on time)

- Non-resettable

Controls

- Variable RF Input Attenuator (0 to −20 dB)
- Output Power (forward)
  - High Trip Point Set
  - Low Trip Point Set
- Reflected Power
  - High Trip Point Set

ELECTRONIC POWER CONDITIONER DRAWER

Operational Status Indicators (front panel)

- Power on
- Ready
- High Voltage on
- Beam on
- Fault
- Remote
- Reset

Remote Control Interface Connector (rear panel)

- All operational status indicators and control switches can be switched to a remote control interface connector to provide a ready means of remote control and status indication.

Protection

- Prime Power Circuit Breakers (three)
- TWT Warm-up Time Delay
- Automatic Sequencing of High Voltage and Beam Current
- Helix Current Overload
- High Voltage Arc
- High or Low Cathode Voltage
- High Temperature (TWT and power supply)
- High or Low Line Voltage
- High Reflected Power (thermal cutout)
- System and Safety Interlocks

Metering

- Output Power
- High Trip Point (forward)
- Low Trip Point (forward)
- Reflected Power
- High Trip Point (reflected)
- Meter Multiplier

RF Signal Sample Output (−70 dBc)

RF Power Alarm Output Connector (rear panel)

- High Output Power Alarm
- Low Output Power Alarm
- High Reflected Power Alarm

Metering

- Collector Voltage
- Cathode Voltage
- Anode Voltage
- Bus Voltage
- Helix Current
- Helix Current Trip Point

Control Switches

- Power On-Off
- High Voltage On-Off
- Beam On-Off
- Remote-Local (rear panel)
- Fault/Reset

Fault Indicators

- Helix Current Overload
- High Voltage Arc
- High Temperature, TWT
- High Temperature, Power Supply
- High or Low Line Voltage
- High or Low Cathode Voltage
- System Interlock Open
- Safety Interlock Open

Automatic Recycle Provisions

- Selectable 2, 4, or 8 faults

SPECIFICATIONS*

RF Performance (typical)

Frequency	5.925 to 6.425 GHz
Bandwidth	500 MHz minimum
Power Output (CW)	350 W minimum
Gain (with solid state driver)	
At Rated Power	55 dB minimum
Small Signal	62 dB minimum
Stability	±0.25 dB/24 hours
Control (continuous)	0 to −20 dB
Settability	±0.2 db
Variation (over 500 MHz band)	±1.0 dB maximum**
Slope (over 40 MHz band)	0.02 dB/MHz maximum**
Gain (without solid state driver)	
At Rated Power	40 dB minimum
Small Signal	47 dB minimum
Group Delay (any 40 MHz band)	
Parabolic	0.05 ns/MHz^2 maximum
Linear	0.1 ns/MHz maximum
Ripple	1.0 ns peak-to-peak maximum
VSWR	
Input	1.3:1 maximum
Output (non-operating)	1.2:1 maximum
Load (normal operation)	2.0:1 maximum
AM/PM Conversion (@ rated power)	5°/dB maximum
Noise and Spurious	
3.7 to 4.2 GHz band	−130 dBW/4 kHz maximum
4.2 to 12.0 GHz band	−65 dBW/4 kHz maximum
12.0 to 40.0 GHz band	−110 dBW/MHz maximum
Noise Figure	
With Solid State Driver	15 dB maximum
Without Solid State Driver	35 dB maximum
Residual AM (referred to single carrier at rated output power)	
Below 10 kHz	−40 dB maximum
10 kHz to 500 kHz	$-20\ (1 + \log_{10} f)$ dB maximum
Above 500 kHz	−80 dB maximum
Residual FM	−60 dBc maximum
Harmonic Output (at rated output power)	−60 dBc maximum
IM (3rd Order two equal carriers, 12 W each)	−25 dB maximum

Electrical

Input Voltage	120/240 VAC ± 10% 50/60 HZ ± 5% single phase, 3 wire
Input Power	2.0 kVA maximum
Power Factor	0.9 minimum
Efficiency (typical at saturation)	20%

Mechanical

Cooling (integral blowers)	forced air
Weight	
RF Drawer	50 pounds (22.7 kg) maximum
Power Conditioner Drawer	120 pounds (54.4 kg) maximum
Dimensions	
RF Drawer	19 inches wide X 8 3/4 inches high X 24 inches deep (48.3 cm X 22.2 cm X 61.0 cm)
Power Conditioner Drawer	19 inches wide X 12 1/4 inches high X 22 inches deep (48.3 cm X 31.1 cm X 55.9 cm)
Mounting	rack with non-tilting chassis slides
Connectors	
RF Input	type N female
RF Output	CPR-137 W/G
RF Signal Sample	type N female

Environmental

Temperature (operating)	0 to +50° C
Relative Humidity (without condensation)	95% maximum
Altitude	10,000 feet maximum***
Shock and Vibration	as normally encountered in commercial shipping and handling

*Specifications subject to change without prior notice.

**Measured with 0 dB input attenuation.

***40°C maximum operating temperature above 6,000 ft.

BLOCK DIAGRAMS

RF Drawer

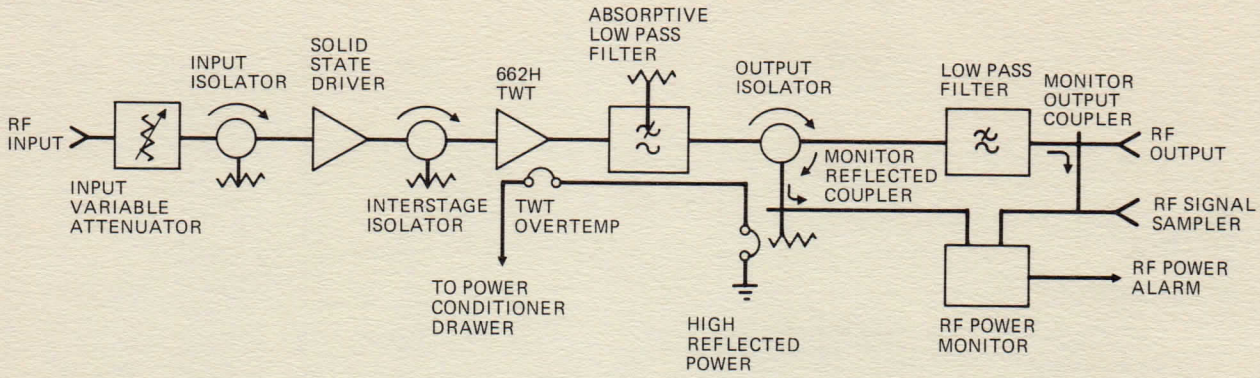

RF Components

- Input Isolator
- Input Variable Attenuator (0 to –20 dB)
- Output Harmonic Filter
- Output Isolator, Terminated
- Reflected Power Monitor
- Forward Power Monitor
- Solid State Driver Amplifier (includes interstage isolator)

Power Conditioner Drawer

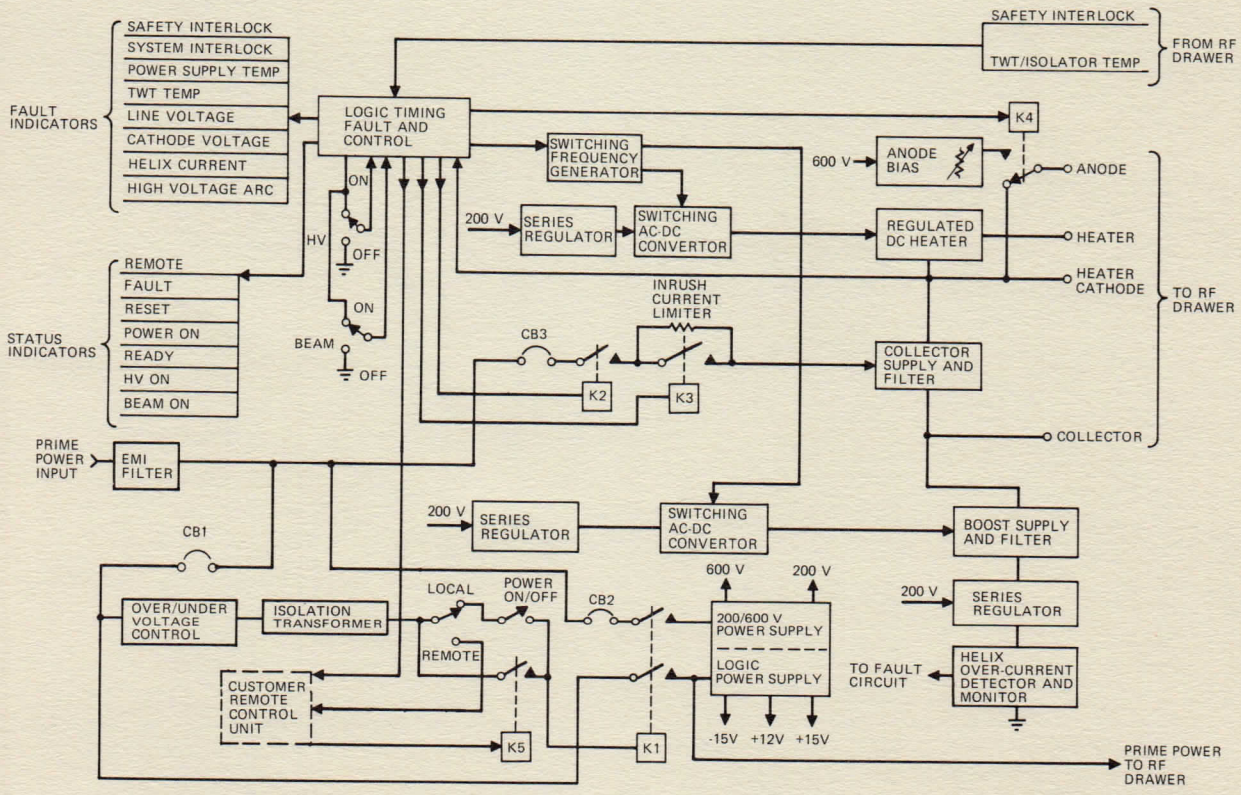

TYPICAL PERFORMANCE CURVES

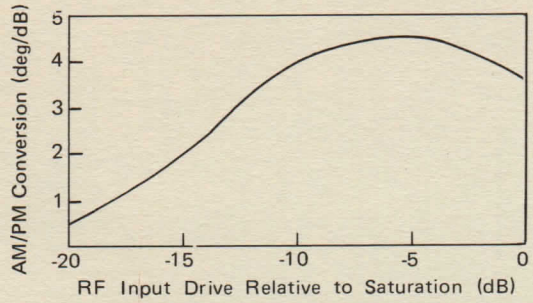

AM/PM CONVERSION VERSUS INPUT DRIVE

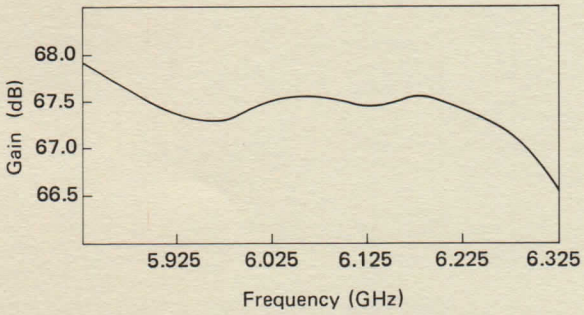

SMALL SIGNAL GAIN VERSUS FREQUENCY

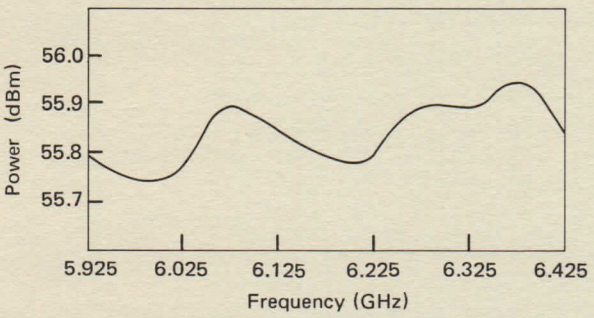

SATURATED POWER VERSUS FREQUENCY

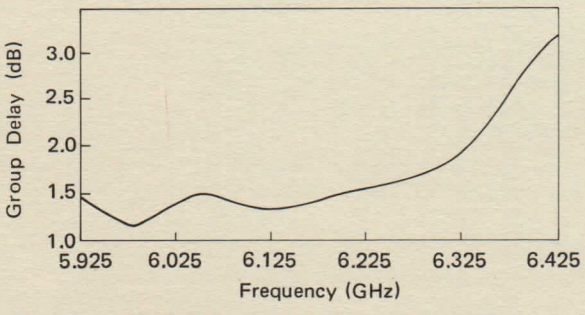

GROUP DELAY VERSUS FREQUENCY

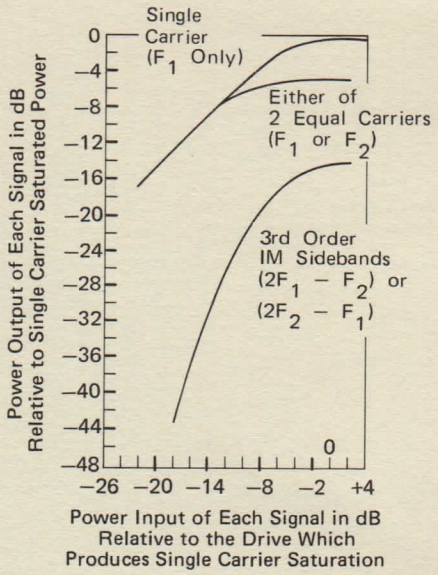

THIRD ORDER INTERMODULATION PRODUCT AS A FUNCTION OF RF POWER INPUT

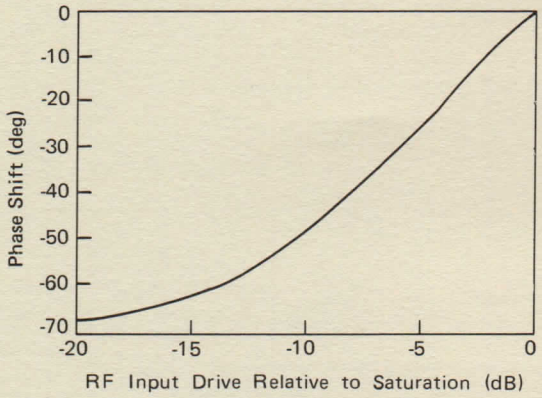

PHASE SHIFT VERSUS INPUT DRIVE

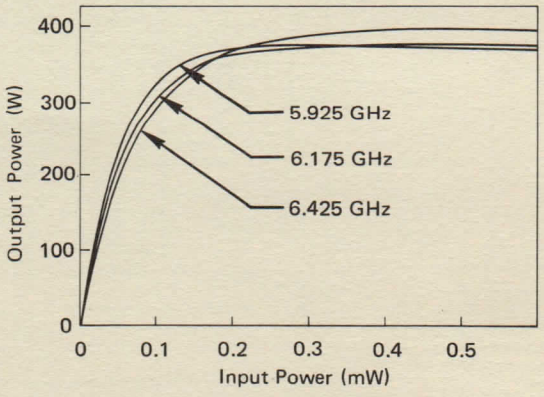

OUTPUT POWER VERSUS INPUT POWER

9240H-02 COMMUNICATIONS HPA SUBSYSTEM 6 GHz 400 W

HUGHES

HUGHES AIRCRAFT COMPANY

ELECTRON DYNAMICS DIVISION

OUTLINE DRAWINGS

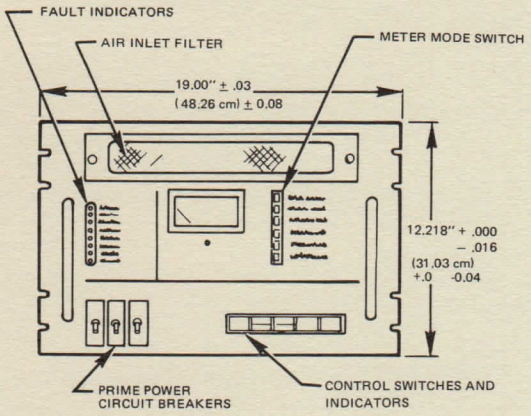

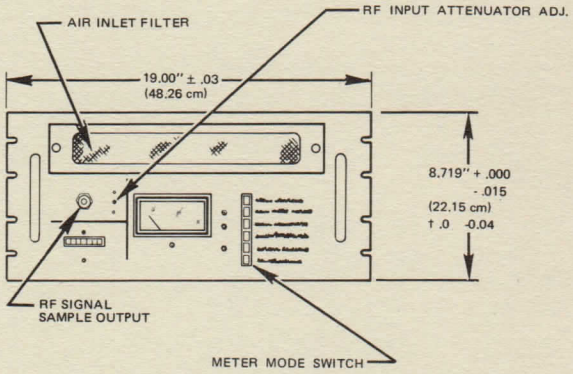

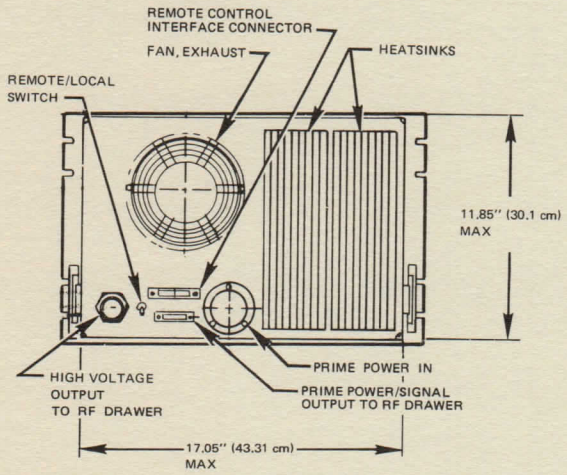

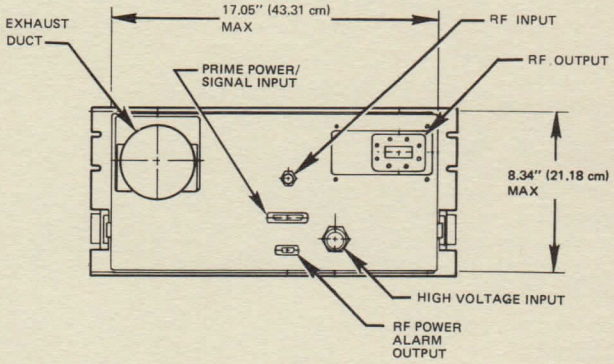

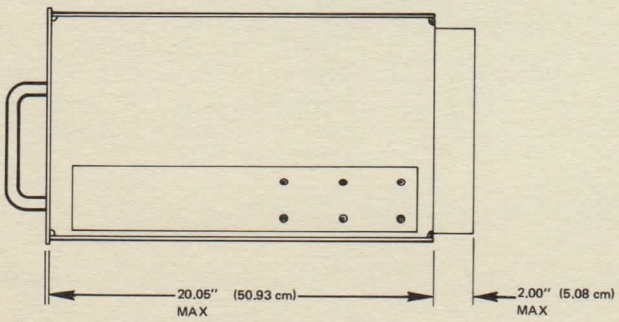

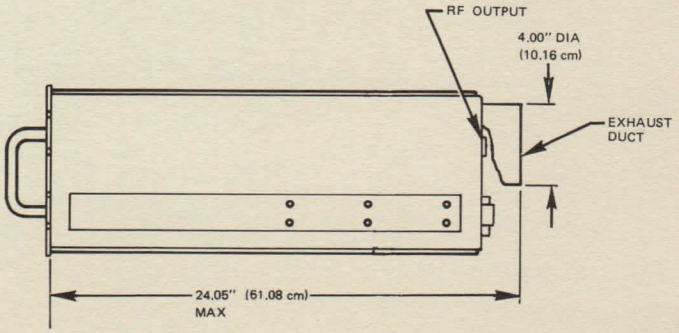

HUGHES
HUGHES AIRCRAFT COMPANY
ELECTRON DYNAMICS DIVISION 3100 West Lomita Boulevard, Torrance, California 90509, Tel (213) 534-2121

PRINTED IN USA 9/77

HUGHES

HUGHES AIRCRAFT COMPANY

ELECTRON DYNAMICS DIVISION

COMMERCIAL TWTS

FEATURES

Covering 1 Watt in K and Ka bands
10 and 20 Watts in L-, S-, C-, X-, and Ku-bands

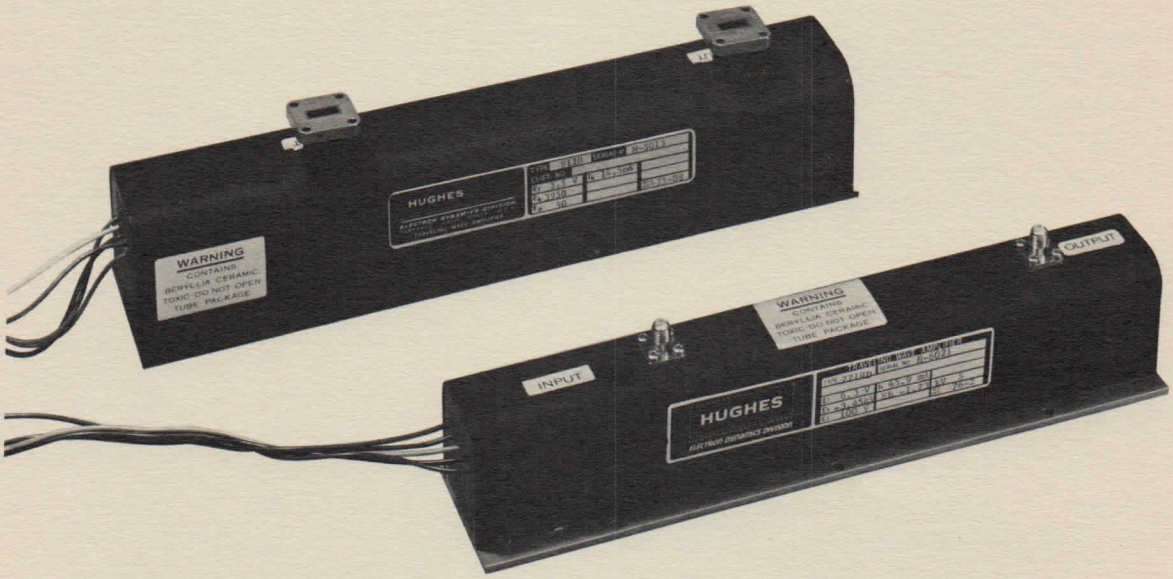

DESCRIPTION

The Hughes Commercial Traveling-wave Tubes (TWTs) in this series have a wide variety of applications for laboratory testing and systems requirements. Their construction is based on knowledge gained in the design and manufacture of the Hughes space TWTs which have won world-wide recognition for their proven quality and reliability. Millions of hours of operation in space have been logged. The same facilities, technical know-how and craftsmanship is utilized in producing these commercial TWTs. This, combined with proven reliability, allows us to warrant these TWTs for one year, regardless of the hours of operation.

SPECIFICATIONS①

ELECTRICAL

Gain (at rated power out)	30 dB minimum
Duty	CW
Noise Figure	30 dB typical, 35 dB maximum
VSWR	3.0:1 maximum

MECHANICAL

Construction	metal ceramic
Cooling	conduction
Focusing	PPM
Weight	3 pounds (1.4 kilograms) maximum②
Connectors (input & output)	SMA③

ENVIRONMENTAL

Temperature (baseplate)	85°C maximum④
Altitude (non-operating)	50,000 feet (15,250 meters) maximum

The TWT is rugged in design and, in general, will meet the requirements of MIL-E-5400. Contact Hughes Electron Dynamics Division for specific details.

WARRANTY

One year – no hour limit.

① Specifications subject to change without notice.

② Model 417HD and 418HD TWT is 7 pounds (3.2 kg) maximum.

③ Model number 856H TWT uses WR-62 waveguide on the output only. Model 911H TWT uses WR-42 waveguide on both the input and output. Model 912H TWT uses WR-28 on both the input and output.

④ 911H/912H maximum base plate temperature not to exceed 50°C.

1 WATT SERIES

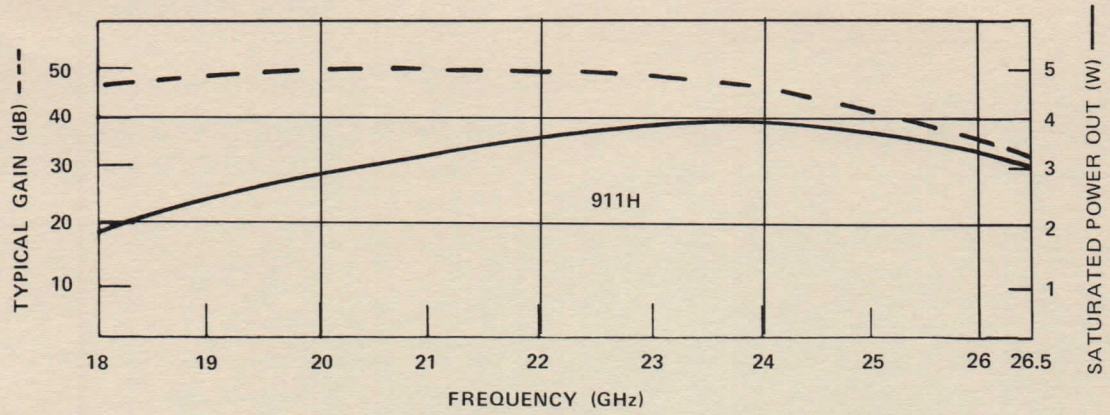

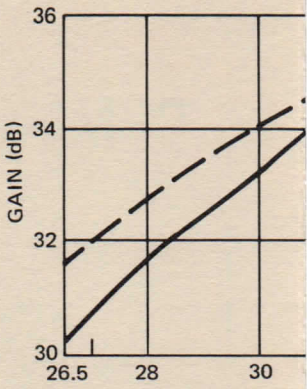

10 WATT SERIES

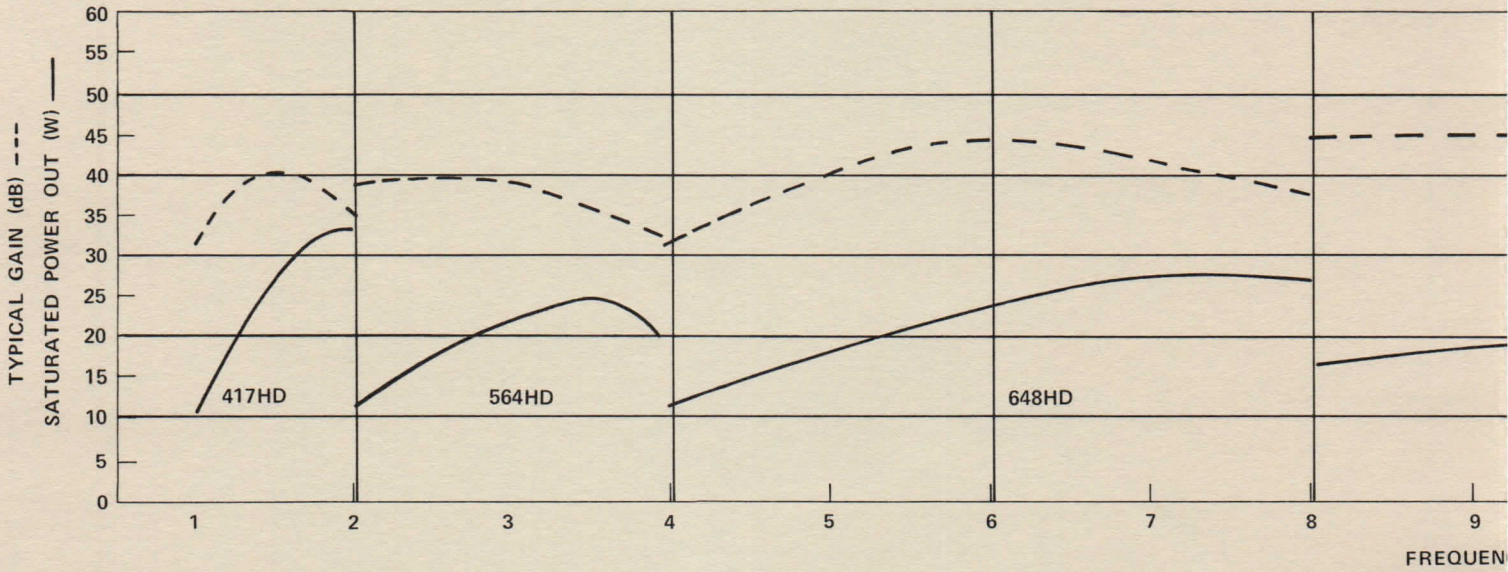

20 WATT SERIES

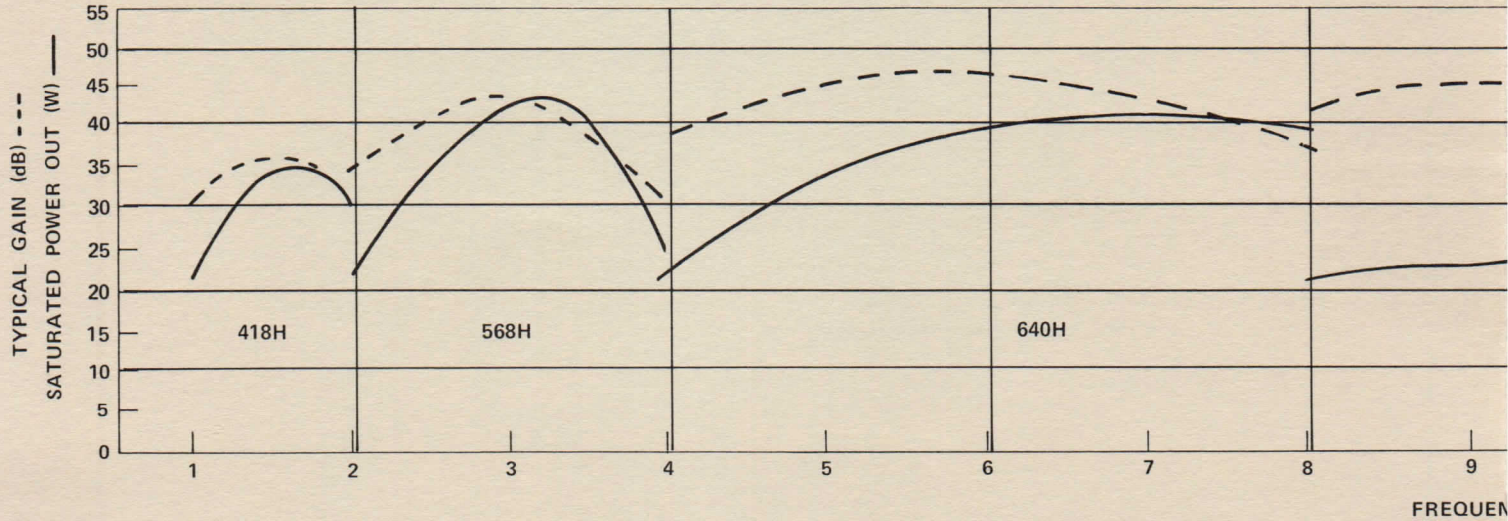

MANCE CURVES

HUGHES
HUGHES AIRCRAFT COMPANY

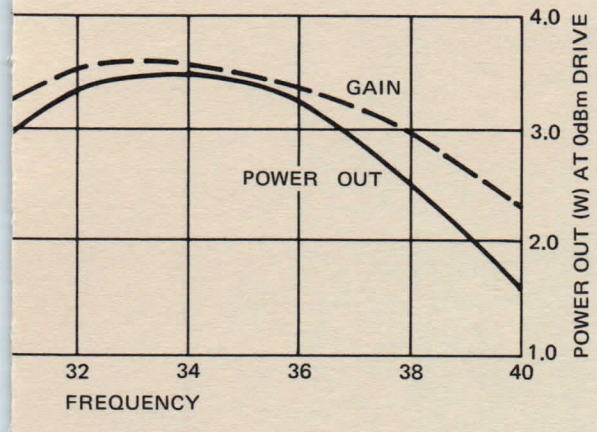

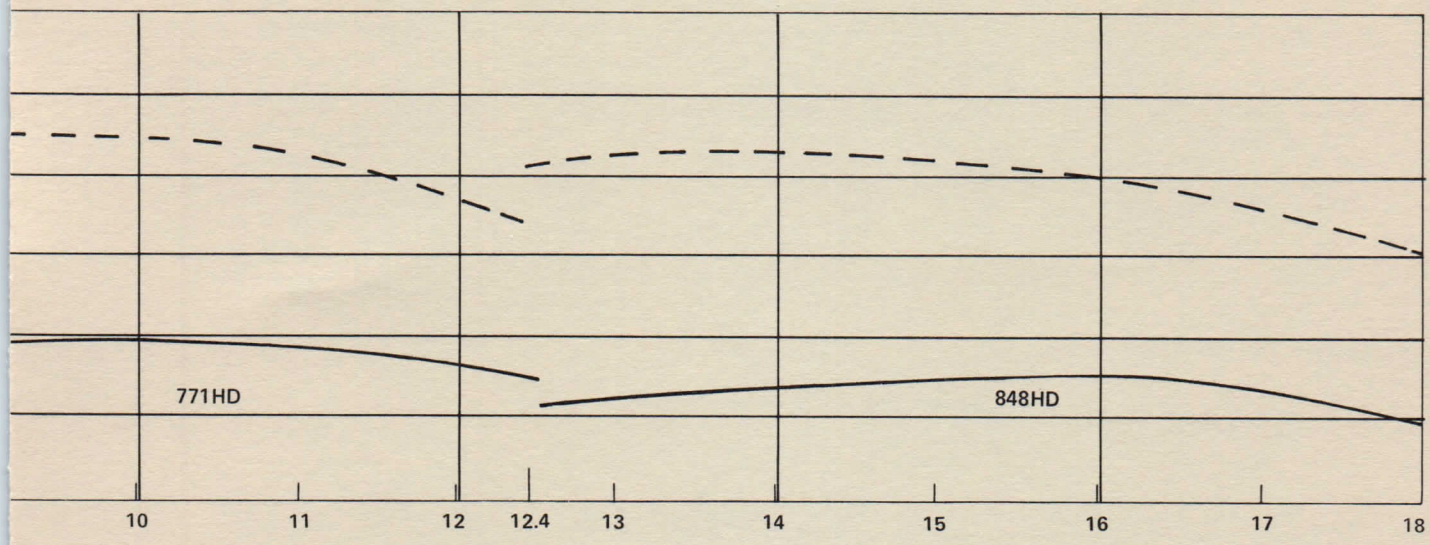

CY (GHz)

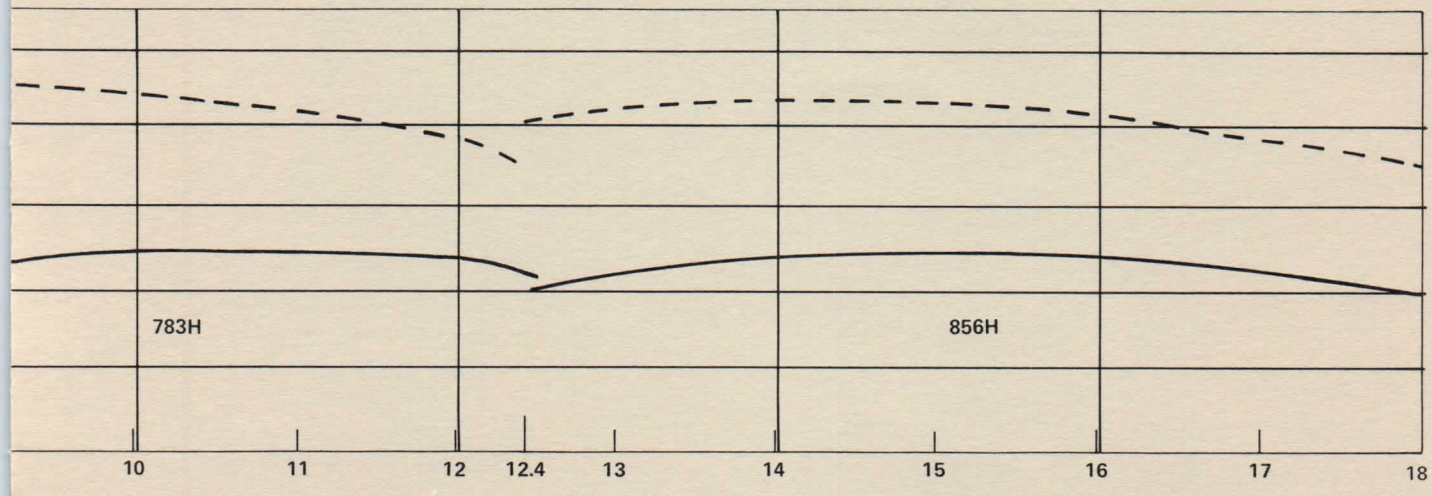

CY (GHz)

OPERATING PARAMETERS

1 WATT SERIES

Model Number	Frequency (GHz)	Cathode Voltage (E_k) (–Vdc)	Cathode Current (I_k) (mA maximum)	Anode Voltage (E_a) (Vdc maximum)	Anode Current (I_a) (mA maximum)	% Collector Depression (max.) (% of E_k)	Body Current (I_w) (mA maximum)	Heater Voltage (E_f) (AC or DC)	Heater Current (I_f) (A)
911H	18 – 26.5	3700 ± 200	20.0	440	0.01	70	2.0	6.0	1.0
912H	26.5 – 40	5700 ± 300	25.0	440	0.01	75	2.0	6.0	1.0

10 WATT SERIES

Model Number	Frequency (GHz)	Cathode Voltage (E_k) (-Vdc)	Cathode Current (I_k) (mA maximum)	Anode Voltage (E_a) (Vdc maximum)	Anode Current (I_a) (mA maximum)	% Collector Depression (max.) (% of E_k)	Body Current (I_w) (mA maximum)	Heater Voltage (E_f) (AC or DC)	Heater Current (I_f) (mA)
417HD	1.0 - 2.0	1750 ± 100	110	400	1.0	30	15.0	6.3	780
564H	2.0 - 4.0	1500 ± 100	80	400	1.0	30	15.0	6.3	420
648HD	4.0 - 8.0	2800 ± 100	65	400	1.0	50	6.0	6.3	320
771HD	8.0 - 12.4	3400 ± 100	50	400	1.0	50	6.0	6.3	320
848HD	12.4 - 18.0	3600 ± 200	60	400	1.0	50	6.0	6.1	700

20 WATT SERIES

Model Number	Frequency (GHz)	Cathode Voltage (E_k) (-Vdc)	Cathode Current (I_k) (mA maximum)	Anode Voltage (E_a) (Vdc maximum)	Anode Current (I_a) (mA maximum)	% Collector Depression (max.) (% of E_k)	Body Current (I_w) (mA maximum)	Heater Voltage (E_f) (AC or DC)	Heater Current (I_f) (mA)
418H	1.0 - 2.0	1700 ± 150	125	400	1.0	30	15.0	6.3	780
568H	2.0 - 4.0	1950 ± 100	120	400	1.0	30	15.0	6.3	420
640H	4.0 - 8.0	3500 ± 150	100	400	1.0	50	6.0	6.3	320
783H	8.0 - 12.4	3950 ± 150	65	400	1.0	50	6.0	6.3	320
856H	12.4 - 18.0	4200 ± 200	70	400	0.5	50	3.0	6.1	700

BLOCK DIAGRAM

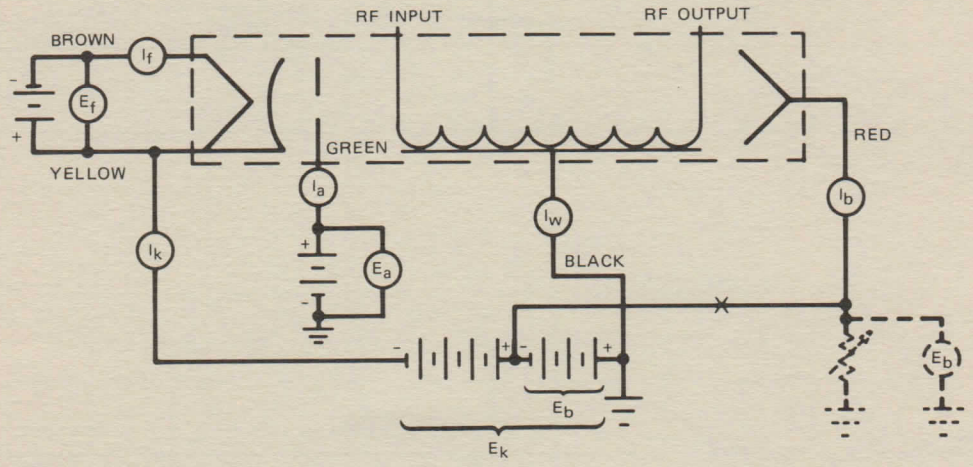

APPLICATIONS

The block diagram shows the interconnection between the tube and power supply and indicates monitoring points for voltages and currents. The configuration, as shown, is for depressed collector operation. As an alternate approach for depressed collector operation, eliminate the wire at point "X" and substitute dashed resistor. For non-depressed operation, eliminate the wire at point "X" and connect the collector lead (red) directly to ground.

EXTREME CAUTION should be taken when setting up tube voltages so as not to create an undervoltage or overvoltage condition. Power supply voltages must be within the following tolerances of name plate voltage prior to making connection to the tube: Heater (E_f ±5%; Anode (E_a) ±10%; Cathode (E_k) ±2%; Collector (E_b) ±5% of nameplate value.

COMMERCIAL TWTS

HUGHES
HUGHES AIRCRAFT COMPANY
ELECTRON DYNAMICS DIVISION

OUTLINE AND MOUNTING DRAWING

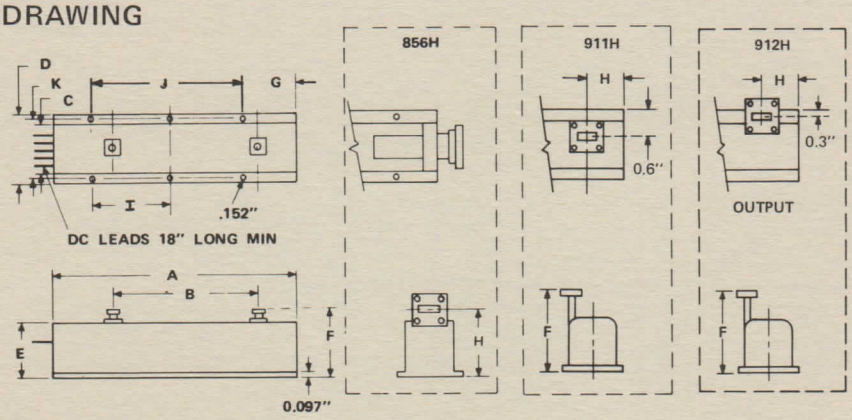

1 WATT SERIES

TWT	A	B	C	D	E	F	G	H	I	J	K
911H	10.75	6.10	1.90	2.25	2.1	3.0	N/A	2.1	3.0	N/A	2.05
912H	10.75	6.10	1.90	2.25	2.1	3.1	N/A	2.1	3.0	N/A	2.05

DIMENSIONS ARE IN INCHES

10 WATT SERIES

TWT	A	B	C	D	E	F	G	H	I	J	K
417HD	13.00	9.20	1.80	2.25	2.00	3.50	2.50	1.30	4.00	8.00	2.05
564HD	9.50	5.57	1.38	2.00	1.77	2.27	1.75	1.50	3.00	6.00	1.75
648HD	9.50	5.57	1.38	2.00	1.77	2.27	1.75	1.50	3.00	6.00	1.75
771HD	9.50	5.32	1.38	2.00	1.77	2.27	1.75	1.50	3.00	6.00	1.75
848HD	8.50	4.60	1.38	2.00	1.77	2.27	1.25	1.50	3.00	6.00	1.75

DIMENSIONS ARE IN INCHES

20 WATT SERIES

TWT	A	B	C	D	E	F	G	H	I	J	K
418H	16.00	11.46	1.80	2.25	2.00	3.50	1.50	2.00	3.25	13.00	2.05
568H	9.50	5.57	1.38	2.00	1.77	2.27	1.75	1.50	3.00	6.00	1.75
640H	10.7	6.77	1.38	2.00	1.77	2.27	2.36	1.50	3.00	6.00	1.75
783H	9.50	5.32	1.38	2.00	1.77	2.27	1.75	1.50	3.00	6.00	1.75
856H	8.50	4.60	1.38	2.00	1.80	2.30	1.25	2.00	3.00	6.00	1.75

DIMENSIONS ARE IN INCHES

YOUR LOCAL REPRESENTATIVE

HUGHES
HUGHES AIRCRAFT COMPANY
ELECTRON DYNAMICS DIVISION 3100 West Lomita Boulevard, P.O. Box 2999. Torrance, California 90509. Tel (213) 534-2121

Printed in U.S.A. 7/80 AL

HUGHES

HUGHES AIRCRAFT COMPANY

ELECTRON DYNAMICS DIVISION

MULTI-BAND COMMERCIAL TWTS

FEATURES

Multi-Band Tubes
10 and 20 Watts covering L through Ku-band

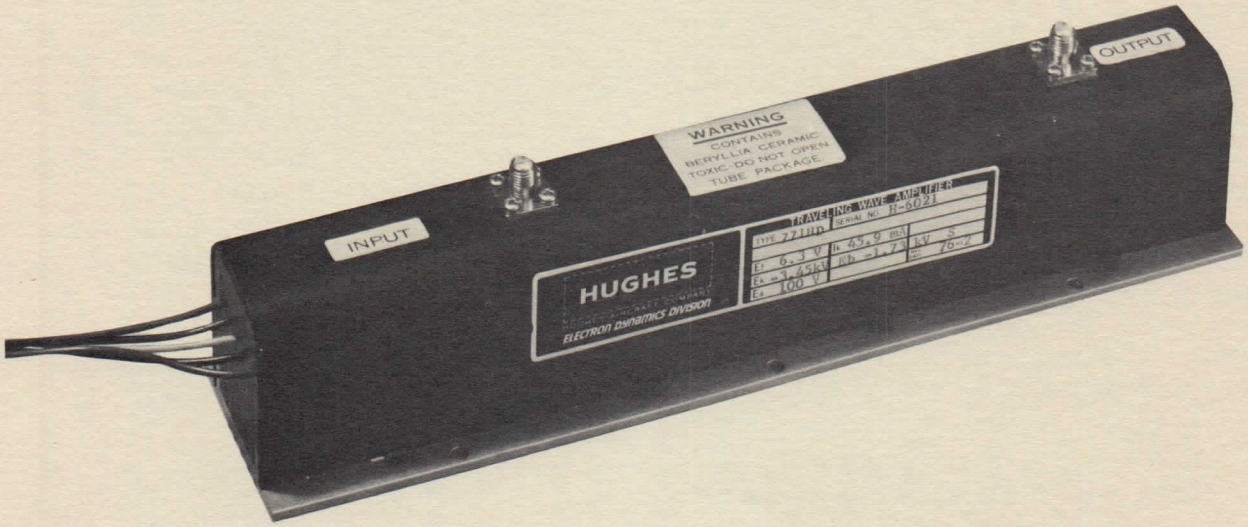

DESCRIPTION

The Hughes Commercial Traveling-wave Tubes (TWTs) in this series have a wide variety of applications for laboratory testing and systems requirements. Their construction is based on knowledge gained in the design and manufacture of the Hughes space TWTs which have won world-wide recognition for their proven quality and reliability. Millions of hours of operation in space have been logged. The same facilities, technical know-how and craftsmanship is utilized in producing these commercial TWTs. This, combined with proven reliability, allows us to warrant these TWTs for one year, regardless of the hours of operation.

SPECIFICATIONS ①

Electrical

Power Output	10 W minimum ②
Gain (at rated power out)	30 dB minimum ③
Duty	CW
Noise Figure	30 dB typical, 35 dB maximum
VSWR	2.5:1 maximum

Mechanical

Construction	metal ceramic
Cooling	conduction
Focusing	PPM
Weight	3 pounds (1.4 kilograms) maximum
Connectors (input & output)	SMA

Environmental

Temperature (baseplate)	85°C maximum
Altitude (non-operating)	50,000 feet (15,250 meters) maximum

The TWT is rugged in design and, in general, will meet the requirements of MIL-E-5400. Contact Hughes Electron Dynamics Division for specific details.

Warranty

One full year regardless of the hours of operation.

① Specifications subject to change without notice.

② 20 W power output on 564HS and 419H.

③ See performance curves for 648HS and 664H.

TYPICAL PERFORMANCE

Selected Series

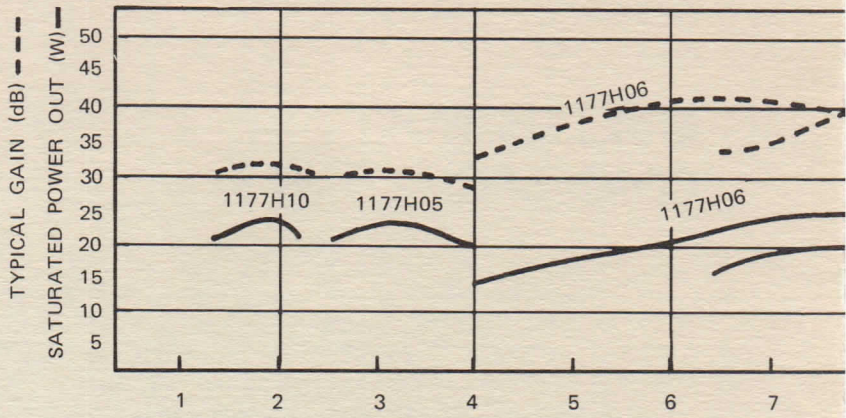

Broadband Series

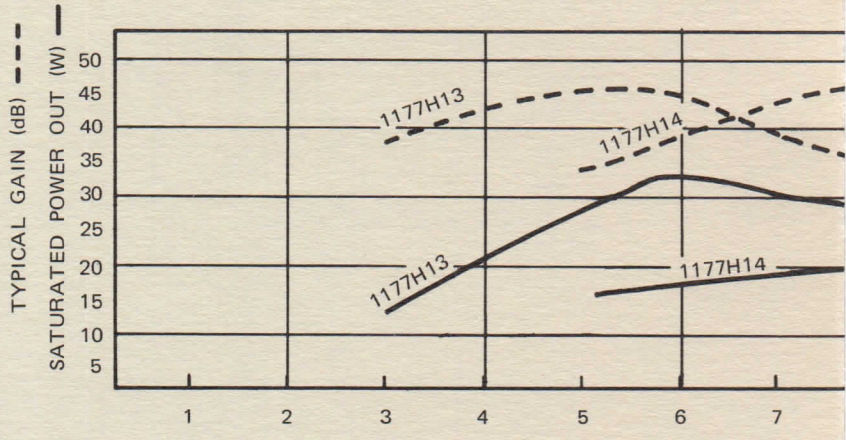

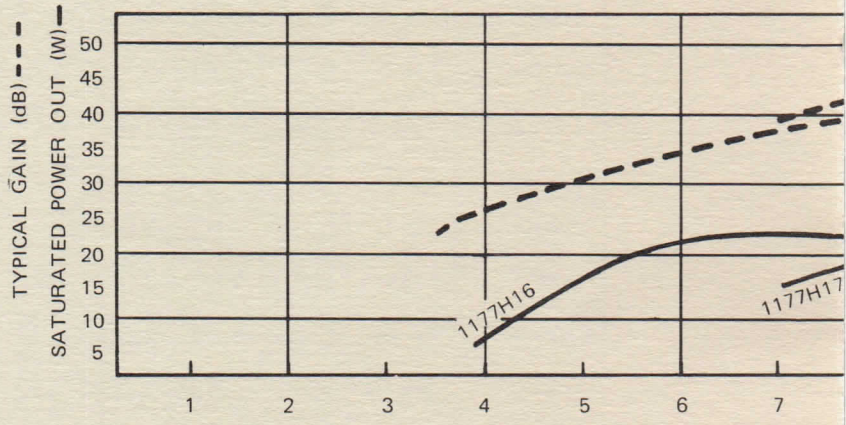

OUTLINE AND MOUNTING DRAWING

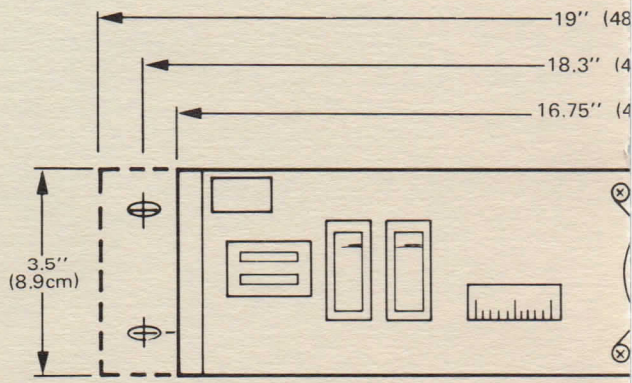

Note: L-band units have a modified rear panel for tube protection. Complete details available upo

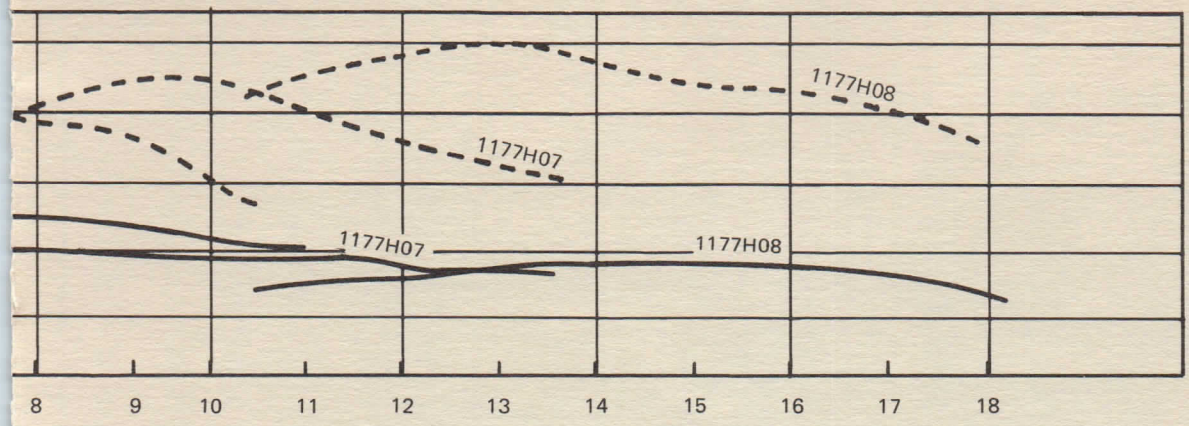
1177H08
1177H07
1177H07
1177H08
8
9
10
11
12
13
14
15
16
17
18
FREQUENCY (GHz)

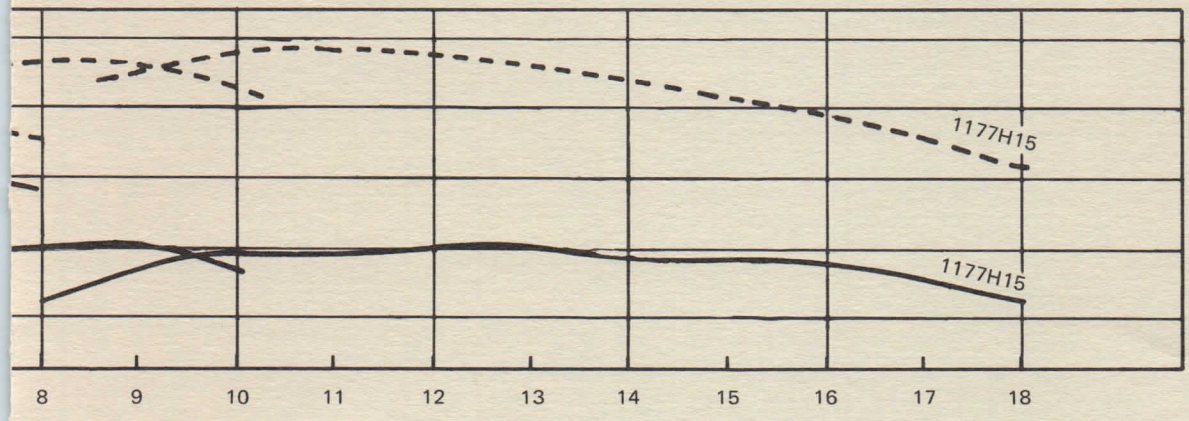
1177H15
1177H15
8
9
10
11
12
13
14
15
16
17
18
FREQUENCY (GHz)

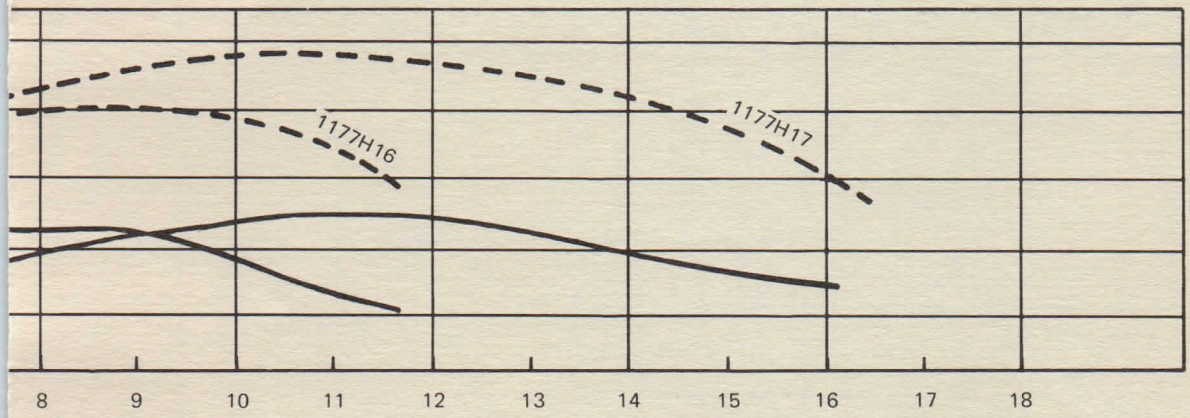
1177H17
1177H16
8
9
10
11
12
13
14
15
16
17
18
FREQUENCY (GHz)

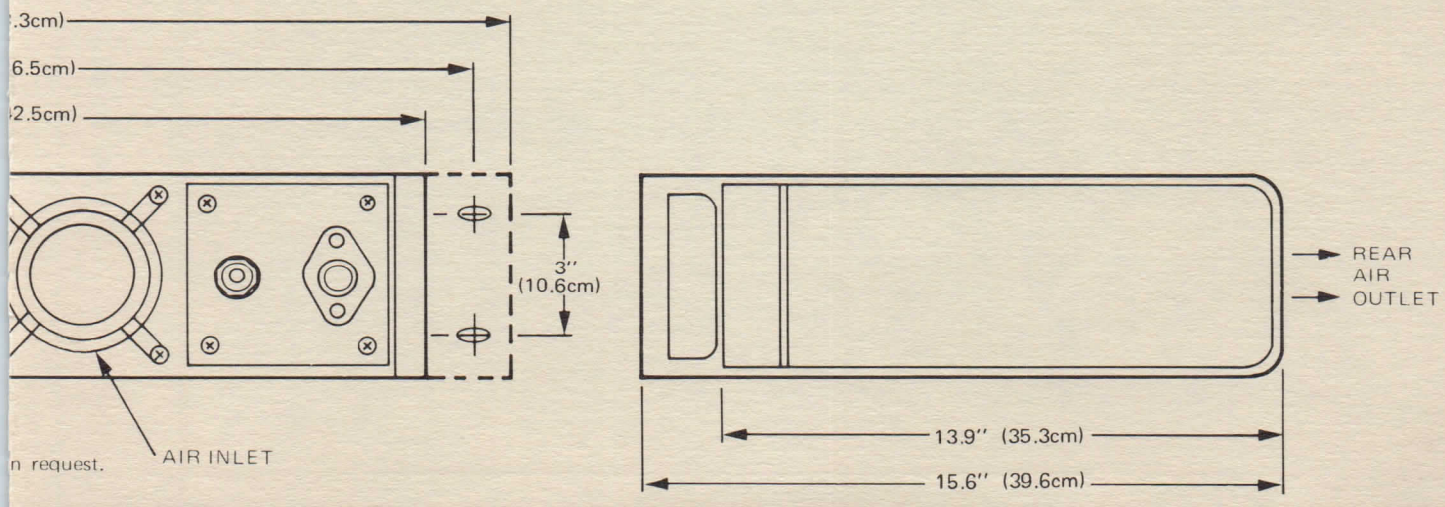
.3cm)
6.5cm)
2.5cm)
3"
(10.6cm)
AIR INLET
n request.
REAR
AIR
OUTLET
13.9" (35.3cm)
15.6" (39.6cm)

OPERATING PARAMETERS

Model Number	Frequency (GHz)	Cathode Voltage (E_k) (-Vdc)	Cathode Current (I_k) (mA maximum)	Anode Voltage (E_a) (Vdc maximum)	Anode Current (I_a) (mA maximum)	% Collector Depression (max.) (% of E_k)	Body Current (I_w) (mA maximum)	Heater Voltage(E_f) (AC or DC) ± 5%	Heater Curent (I_f) (mA)
419H	1.4–2.4	1750±100	110	400	1.5	30	6.0	6.3	780
564HDS	2.5–4.0	1500±100	110	400	1.5	30	6.0	6.3	420
646H	3.0–8.0	2900±100	80	400	1.0	50	6.0	6.3	320
648HDS	4.0–10.5	2800±100	65	400	1.5	50	6.0	6.3	320
664H	3.9–11.7	3500±100	55	400	1.5	50	6.0	6.3	320
746H	5.0–10.0	3500±100	55	400	1.5	50	6.0	6.3	320
771HDS	6.5–13.5	3400±100	55	400	1.5	50	6.0	6.3	320
785H	7.0–16.5	3800±100	55	400	1.5	50	6.0	6.3	320
846H	8.0–18.0	3900±100	55	400	1.5	50	6.0	6.3	320
848HDS	10.5–18	3600±100	60	400	1.5	50	6.0	6.1	700

BLOCK DIAGRAM

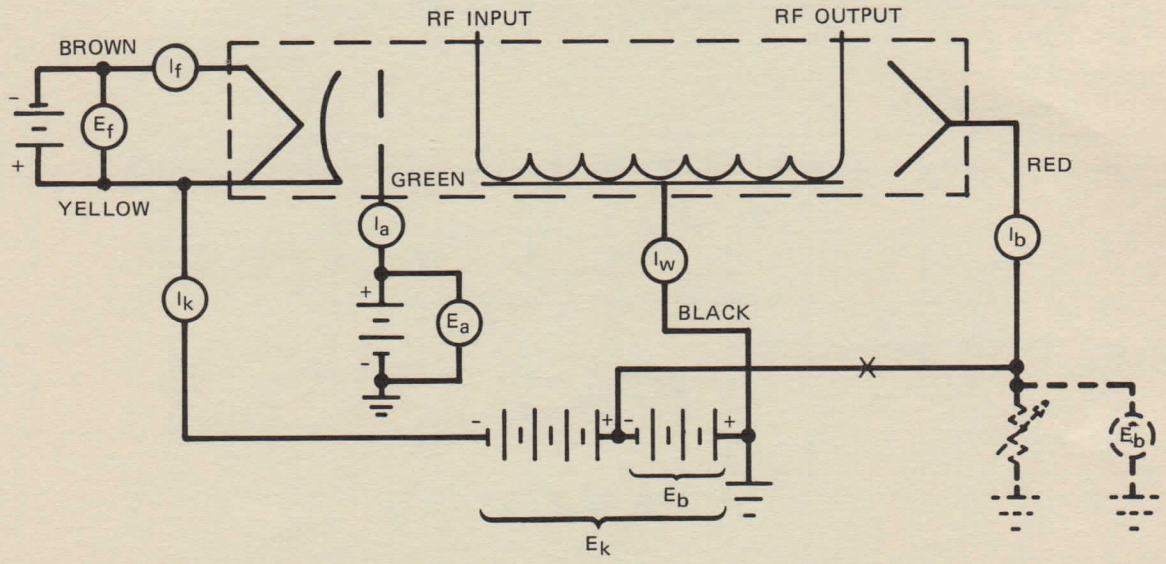

APPLICATIONS

The block diagram shows the interconnection between the tube and power supply and indicates monitoring points for voltages and currents. The configuration, as shown, is for depressed collector operation. As an alternate approach for depressed collector operation, eliminate the wire at point "X" and substitute dashed resistor. For non-depressed operation, eliminate the wire at point "X" and connect the collector lead (red) directly to ground.

EXTREME CAUTION should be taken when setting up tube voltages so as not to create an undervoltage or overvoltage condition. Power supply voltages must be within the following tolerances of name plate voltage prior to making connection to the tube: Heater (E_f ±5%; Anode (E_a) ±10%; Cathode (E_k) ±2%; Collector (E_b) ±5% of nameplate value.

MULTI-BAND COMMERCIAL TWTS

HUGHES

HUGHES AIRCRAFT COMPANY

ELECTRON DYNAMICS DIVISION

OUTLINE AND MOUNTING DRAWING

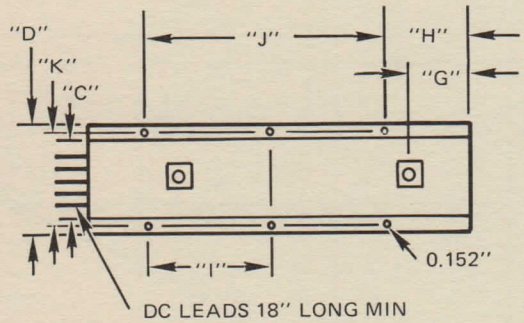

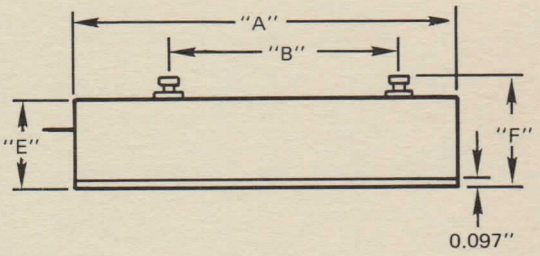

TWT	A	B	C	D	E	F	G	H	I	J	K
419H	13.00	9.20	1.80	2.25	2.00	3.50	1.50	2.50	4.00	8.00	2.05
564HDS	9.50	5.57	1.38	2.00	1.77	2.27	1.50	1.75	3.00	6.00	1.75
646H	10.70	6.77	1.28	2.25	2.00	3.50	1.50	2.36	3.00	6.00	1.75
648HDS	9.50	5.57	1.38	2.00	1.77	2.27	1.50	1.75	3.00	6.00	1.75
664H	10.70	5.80	1.38	2.00	1.77	2.27	1.50	2.36	3.00	6.00	1.75
746H	10.70	5.80	1.38	2.00	1.77	2.27	1.50	2.36	3.00	6.00	1.75
771HDS	9.50	5.32	1.38	2.00	1.77	2.27	1.50	1.75	3.00	6.00	1.75
785H	10.70	5.80	1.38	2.00	1.77	2.27	1.50	2.36	3.00	6.00	1.75
846H	10.70	5.80	1.38	2.00	1.80	2.30	1.50	2.36	3.00	6.00	1.75
848HDS	8.50	4.60	1.38	2.00	1.77	2.27	1.50	1.54	3.00	6.00	1.75

DIMENSIONS ARE IN INCHES

YOUR LOCAL REPRESENTATIVE

HUGHES
HUGHES AIRCRAFT COMPANY
ELECTRON DYNAMICS DIVISION 3100 West Lomita Boulevard, P.O. Box 2999. Torrance, California 90509. Tel (213) 534-2121

Printed in U.S.A. 11/79 AL

TWT INSTRUMENTATION
AMPLIFIERS

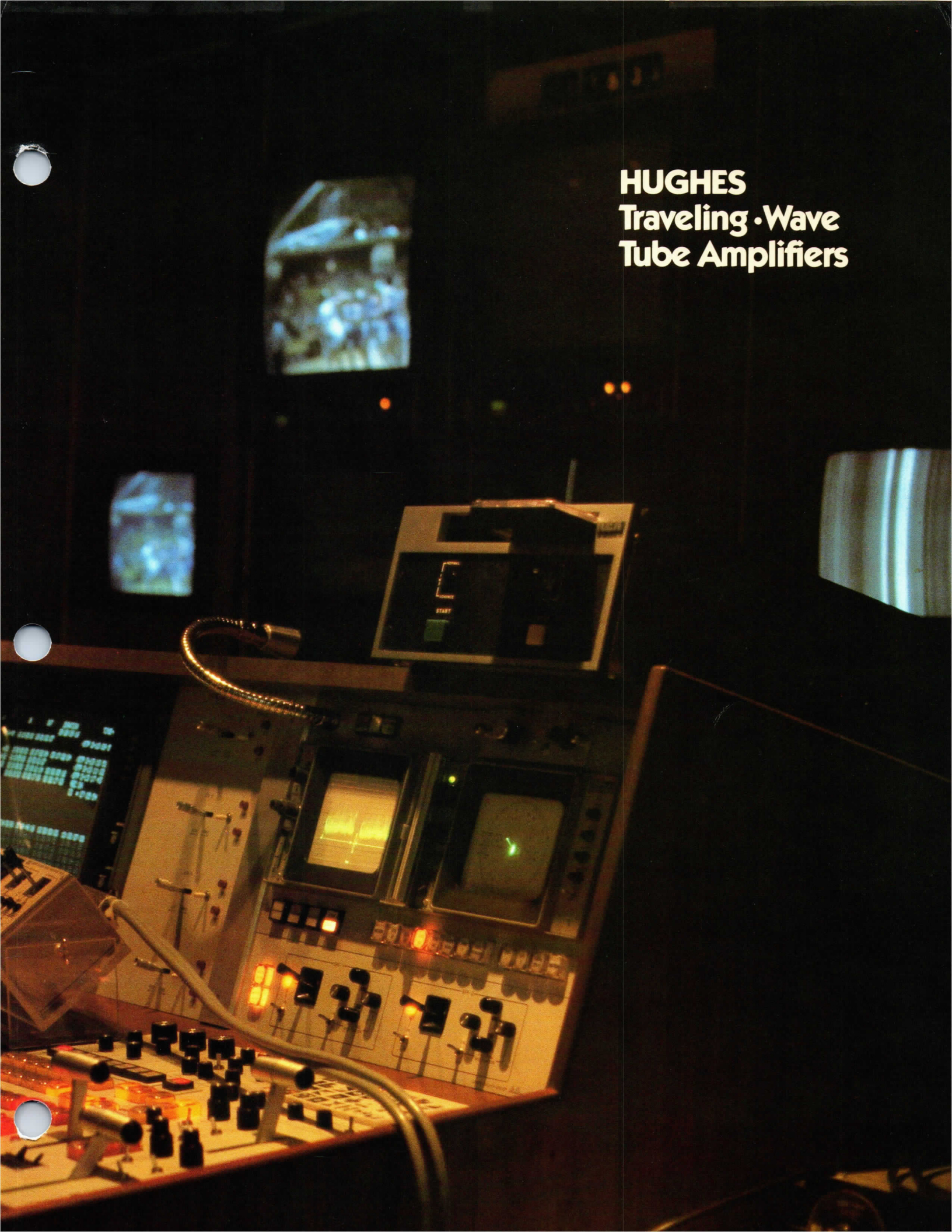

HUGHES
Traveling-Wave Tube Amplifiers

1077H11
1 Watt · 18-26.5 GHz

Commercial Traveling-Wave Tube Amplifiers manufactured by Hughes Aircraft Company are in use throughout the world. To date, we have manufactured and delivered over 5,000 units.

Hughes Aircraft Company has been in the forefront of design and development of complete orbiting satellites and their components. We have used this same technology and experience to produce the very latest in commercial TWTAs. These descendants of space-qualified units have been produced by Hughes since 1968 and are continually undergoing testing and improvement to meet the ever expanding application requirements. The reliability built into our units is a product of the highest quality components, engineering, and years of experience. Three to four years of TWTA operation is not an unusual achievement.

A variety of input power requirements is offered, including 28-48V, 220-110V and 50/60 or 48/420 Hz input. Broad frequency coverage is offered, spanning 1 to 40 GHz at various power levels (1-, 10-, 20-, watts) with multi- and standard band units available in the 10-watt series. Standard band, 1 through 18 GHz units are available in the 20-watt series. Two 1-watt units are offered covering the band from 18 to 40 GHz.

We offer as options TT Logic (TTL) for computer interfacing, and circulator/isolators for TWTA protection. Special options allow a choice of operations in unattended or remote switching. If standard options do not meet your requirements, we will create an option or develop a special unit for your particular application.

Power Out and Gain at Rated Output vs. Frequency

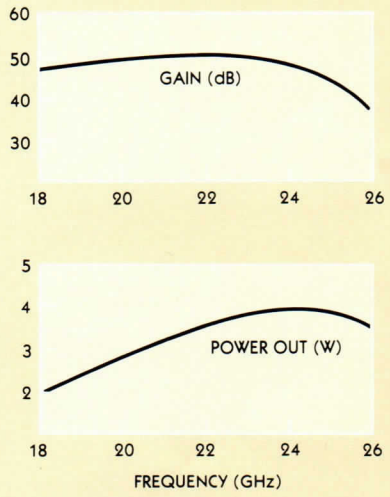

NASA Tracking Station — Lone Pine, CA.

Applications of our TWTAs are as varied as nature allows. From the standpoint of size, weight and ease of operation, it proves to be an excellent laboratory testing unit for either point-to-point or swept frequency measurements, calibration of power sources, as a RF simulator, as test sets for missile checkout, and EMI measuring systems including use in anachoic chambers.

In the Bio Medical field our amplifier has been used as a RF energy source in researching effects of microwaves on cancer cells and to heat atoms in plasma physics.

Hughes TWTAs can be found aboard some of our nation's largest naval vessels. Our one-third rack with transistor to transistor logic (TTL), models 1233H through 1236H, are used on the U.S.S. Enterprise in a test system to check out the EW equipment on its squadron of aircraft. Several other radar systems on board the Enterprise also use our TWTAs.

Some of our first commercial TWTAs were used in remote areas of Alaska as communication amplifiers transmitting via satellite, and have accumulated thousands of hours of uninterrupted operation. More current uses are EMC (Electro-Magnetic Compatibility) testing, radar range determination, and antenna measurement in remote areas. The U.S. Government, as well as private industry, is constantly using these amplifiers working with short pulse, side-looking and over-the-horizon radar systems. The amplifiers have been used numerous times for real time data link projects aboard helicopters. A recent government application consists of telemetry testing aboard the NASA A37 test plane used in support

1177H
10 Watts · 1-18GHz

Power Out and Gain at Rated Output vs. Frequency

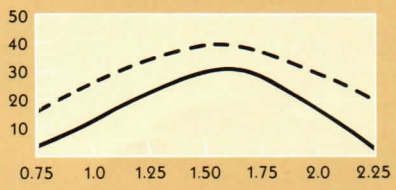

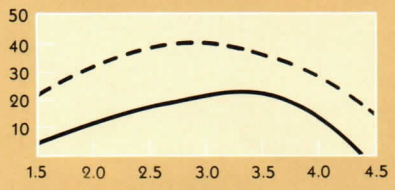

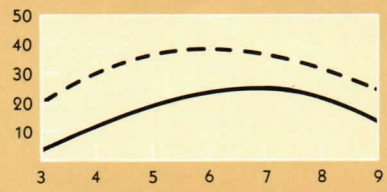

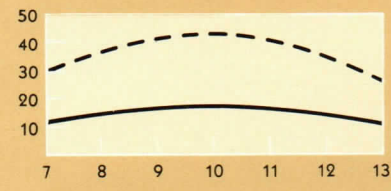

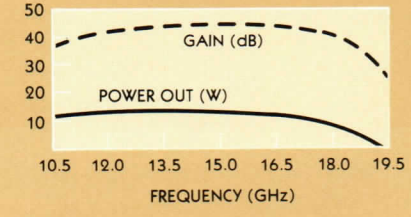

NASA

of the Space Shuttle program.

One of the newest applications is electronic journalism. A mobile van equipped with video and transmission components goes directly to the event site and transmits back to the major receiving station via the TWTA. The signal is then distributed to the viewing community.

With respect to quality, nothing is left undone. Each unit must pass rigid inspections and is fully tested prior to shipment to the customer. We are so positive of the quality and reliability of our units that it allows us to offer a full one year warranty, regardless of hours of operation.

Products of this caliber deserve service to match. We at Hughes strongly believe in high standards and will continue to provide service befitting the Hughes tradition. Making your job easier is our goal. Marketing representatives throughout the world are available to assist you with application problems. The marketing representatives have technical and engineering assistance available from the factory upon request. This assistance is a prime factor in our service policy — making our product perform properly for you.

In addition to the technical assistance, we also maintain a complement of demonstration units which are available for system and customer evaluation. We can make demo units available while your unit is being built. These units are readily available and all of our TWTAs are sold to the general public from a published price list. In addition, these units are offered on the GSA schedule.

1277H
20 Watts · 1-18GHz

Power Out and Gain at Rated Output vs. Frequency

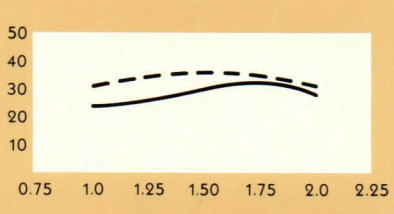

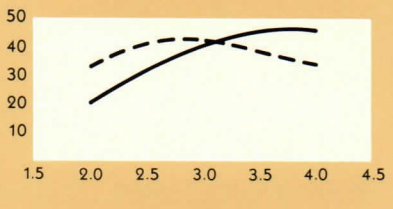

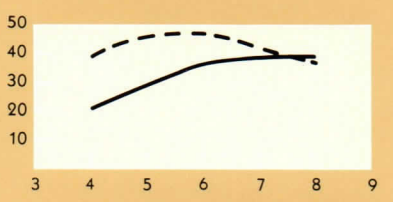

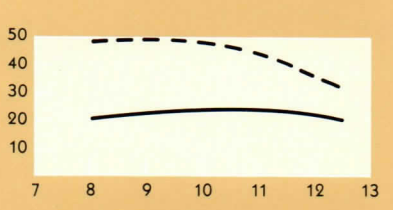

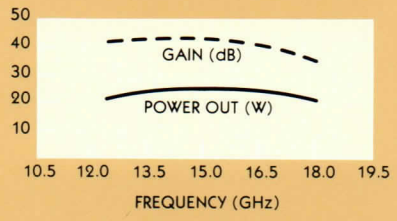

Branch Offices

California:
3100 West Lomita Boulevard, Torrance 90509
213/534-2121
Representative: Mr. A. Gene Peifer

Massachusetts:
1050 Waltham Street, Lexington 02173
617/861-0358
Representative: Mr. C. Jack Eliades

Ohio:
1918 Miami Valley Tower
4th and Ludlow Street, Dayton 45402
513/224-1061
Representative: Mr. Lee E. Schmidlin

Texas:
Royal Central Tower, Suite 302-1
11300 North Central Expressway, Dallas 75243
214/369-9199
Representative: Mr. Russ D. Aikins

Virginia:
1515 Wilson Boulevard, Arlington 22209
703/525-1550
Representative: Mr. James R. Juncker

Manufacturer's Representatives

California:
Blair Associates
421 North Brookhurst, Suite 220, Anaheim 92801
714/635-1350

California:
MCH Associates
4100 Moorpark Avenue, San Jose 95117
408/246-7330

Colorado:
Fry-Gates Inc.
P.O. Box 1273, Englewood 80150
303/795-9176

Florida:
E. G. Holmes & Associates, Inc.
316½ South Bumby Street, Orlando 32802
305/894-8901

Georgia:
E. G. Holmes & Associates, Inc.
4185 Clairmont Road, Chamblee 30341
404/451-6161

Missouri:
EIR Company
605 NW 44th Terrace, Kansas City 64116
816/452-7030

Missouri:
EIR Company
Rt. 1, Box 55, Leasburg 65535
314/895-4100

New Hampshire:
JPR Electronic Sales
208 Coburn Woods, Nashua 03060
603/889-8285

New Mexico:
Fry-Gates Inc.
9901 G. Lomas Blvd. N.E., Albuquerque 87112
505/298-1875

New York:
Ascor Electronics, Inc.
559 North Avenue, New Rochelle 10801
914/235-8838

New York:
R. D. Sherman, Inc.
104½ Clinton Street, Fayetteville 13066
315/637-9861

North Carolina:
E. G. Holmes & Associates, Inc.
600 Northclift Drive, Raleigh 27609
919/847-4845

Pennsylvania:
M. Lader Company, Inc.
456 Germantown Pike, Lafayette Hill 19444
215/825-3177

Virginia:
M. Lader Company, Inc.
1561 Randall Court, Woodbridge 22191
202/296-2497

CANADA:
Giga-Tron Associates, Limited
7 Slack Road, Suite 205
Ottawa, Ontario K2G 0B7
613/225-4090

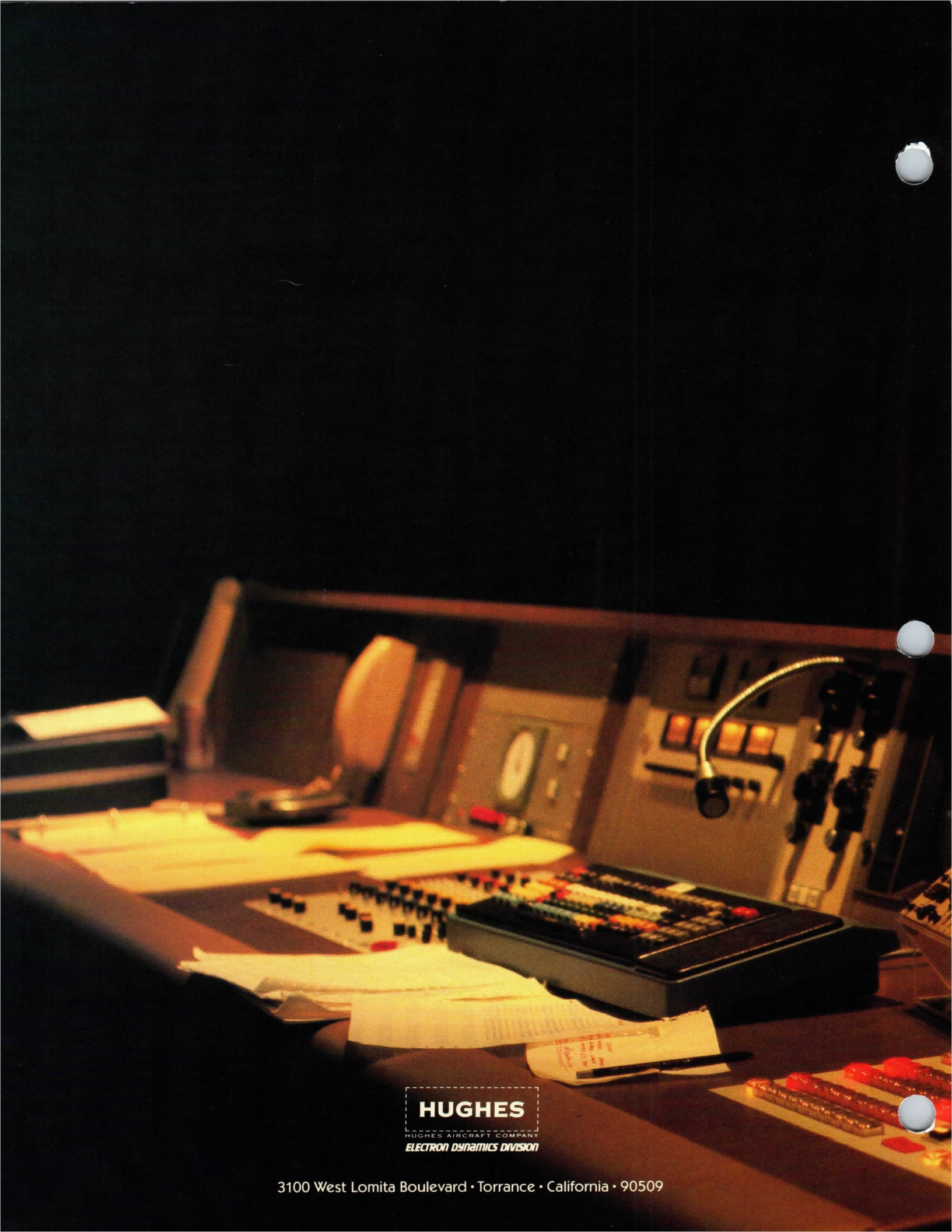
HUGHES
HUGHES AIRCRAFT COMPANY
ELECTRON DYNAMICS DIVISION
3100 West Lomita Boulevard • Torrance • California • 90509

SUMMARY OF L- AND S-BAND SPACE TWT AND TWTA EXPERIENCE

HUGHES

HUGHES AIRCRAFT COMPANY

ELECTRON DYNAMICS DIVISION

SPACECRAFT	TUBE TYPE	SATURATED OUTPUT		CENTER FREQUENCY GHz	NOMINAL TOTAL EFFICIENCY %	CATHODE LOADING A/cm^2	LIFE TEST		SPACE OPERATION		NOTE
		POWER WATTS	GAIN dB				NO. OF TUBES	TOTAL HOURS	NO. OF TUBES	TOTAL HOURS	
DUAL MODE											
Apollo	394H	20/5	26/20	2.3	33/25	.210/.094	5	55,585	30	4,000	
Mariner '69	242H	21/10	27/24	2.3	33/29	.210/.136	-	-	4	36,120	
Mariner '71	242HA	23/10	27/24	2.3	35/31	.210/.136	-	-	2	12,320	Thru 27 Oct 72
Viking Orbiter '75	242HB	20/10	27/24	2.3	35/31	.210/.156	-	-	4	51,000	Thru 31 Aug 78
Mariner '73	242HB	20/10	27/24	2.3	35/31	.210/.156	-	-	2	12,100	Thru 24 March 75
Marisat	291H	7/29/64	25/39/51	1.5	25/50/47	.067/.126/.253	5	131,289**	6	50,585	Thru 31 July 78
SINGLE MODE											
Syncom	314H	2.5	33	2.3	20	.157	9	810,345	4	73,379	Thru 31 March 75
Pioneer	214H	8.0	27	2.3	35	.266	2	37,906	8	398,647	Thru 28 Aug 78
Mariner	216H	10.0	23	2.3	28	.358	1	45,000	2	25,600	
Surveyor	349H	10.0	27	2.3	24	.358	8	272,060	7	700*	
Lunar Orbiter	220H	12.0	27	2.3	30	.358	-	-	5	2,655	
TACSAT	239H	4.5	24	2.3	28	.186	-	-	2	33,400	Thru 3 Dec 72
ATS-5	414H	13.0	30	1.55	29	.109	-	-	2	6,357	Thru 31 May 75
TDRSS	278H	26.0	42	2.07	42	.200	-				
TWTAs											
1164H	241H	13.0	27	2.3	24	.117	-	-	-		
1190H	256H	15.0	30	2.3	27	.117	1	7,110	-		20,728 ON/OFF CYCLES
1266H	278H	26.0	42	2.07	36	.200					
1272H	297H	50.0	40	2.6	50	.157					
DEVELOPMENT											
	8281H	300.0	35	2.15	50	.190					
Insat	297H	50.0	40	2.6	50	.157	-	-	-	-	
	283H	100.0	47	2.4	55	.262	-	-	-	-	

*Estimated
**As of 30 April 78

30 Sept 78

SUMMARY OF C-BAND SPACE TWT AND TWTA EXPERIENCE

HUGHES

HUGHES AIRCRAFT COMPANY

ELECTRON DYNAMICS DIVISION

SPACECRAFT	TUBE TYPE	SATURATED OUTPUT		CENTER FREQUENCY GHz	NOMINAL TOTAL EFFICIENCY %	CATHODE LOADING A/cm^2	LIFE TEST		SPACE OPERATION		NOTE
		POWER WATTS	GAIN dB				NO. OF TUBES	TOTAL HOURS	NO. OF TUBES	TOTAL HOURS	
ATS	384H	4.0	39	3.95	30	.130	12	812,379	-	-	Thru 31 March 75
ATS	384HA	4.5	40	3.95	35	.145	13	507,031	8	91,182	Thru 31 May 75
ATS-3	243H	12.0	42	3.95	33	.140	-	-	2	5,865	Thru 31 May 75
ATS-6	233HC	0.2	52	4.0	10	.136	-	-	2	**	
ATS-6	235HD	12.0	42	3.95	33	.140	-	-	2	1,925	
Early Bird	215H	6.0	41	4.07	36	.176	8	162,098	2	56,200	Thru 31 March 75
Intelsat II	215H	6.0	41	4.07	36	.176	-	-	16	200,160	Thru 8 Jan 75
Intelsat II	226H	0.06	40	4.07	3	.110	3	60,137	8	200,160	Thru 8 Jan 75
Intelsat III	233H	0.15	47	3.97	10	.136	-	-	10	415,700	Thru 8 Jan 75
Intelsat III	235H	12.0	42	3.95	33	.140	-	-	10	415,700	Thru 8 Jan 75
Intelsat IV	261H	6.0	58	3.95	30	.190	-	-	168	3,908,982	Thru 31 July 78
Intelsat IV	262H	1.5	36	3.95	15	.281	6	117,844	26	288,578	Thru 31 July 78
Intelsat IV	272H	1.5	36	3.95	15	.200	6	127,476*	2	28,510	Thru 31 Aug 78
Intelsat IVA	275HA	5.0	55	3.95	36	.178	1	4,340	110	867,226	Thru 31 July 78
Intelsat IVA	276H	0.4	30	3.95	12	.147	1	20,806*	30	69,527	Thru 31 July 78
Intelsat IVA	271H	6.0	58	3.95	30	.190	4	86,713*	50	304,700	Thru 31 July 78
Intelsat V	244H	4.5	55	3.95	36	.170					
Intelsat V	249H	8.5	58	3.95	36	.195					
TDRSS	230H	5.5	55	3.95	36	.195					
Palapa	275HA	5.0	55	3.95	36	.178			24	361,440	Thru 31 July 78
Apple	299H	5.0	55	3.95	35	.200					
Comstar	275HA	5.0	55	3.95	36	.178	3	61,818*	36	428,304	Thru 31 July 78
Comstar	277H	5.5	55	3.95	36	.189	3	78,445*	36	428,304	Thru 31 July 78
Comstar	272H	1.5	36	3.95	15	.200	1	30,275*	8	35,712	Thru 31 July 78
Westar	275HA	5.0	55	3.95	36	.178	-		24	804,192	Thru 31 July 78
Westar	276HA	0.4	30	3.95	12	.147	3	41,074*	4	70,030	Thru 31 July 78
Marisat	275H	5.0	55	3.95	36	.178	-	-	6	65,939	Thru 31 July 78
RCA Satcom	296H	5.0	55	3.95	36	.178	-	-	**	**	
Telesat	275H	5.0	55	3.95	36	.178	-	-	36	1,331,374	Thru 31 Dec 76
Telesat	276HA	0.4	30	3.95	12	.147	-	-	6	123,288	Thru 31 July 78
Space Shuttle	279H	100.0	35	6.15	50	.412	-	-	-	-	
TWTA's											
1264HA	299H	5.0	55	3.95	30	.200					
1264H	230H	5.5	55	3.95	30	.195					
1244H	249H	8.5	58	3.95	30	.195					
1243H	244H	4.5	55	3.95	30	.175					
1222H	279H	100.0	35	6.15	42	.400	-	-	-	-	
1224H	233HC	0.20	50	3.97	8	.136	-	-	2	10,220	Thru 15 Sept 78
1288H	296H	5.0	55	3.95	28	.178	2	15,932	48	957,144	Thru 15 Sept 78

*Thru 30 April 78

30 Sept 78

**See TWTA

SUMMARY OF X-BAND AND HIGHER FREQUENCY SPACE TWT AND TWTA EXPERIENCE

HUGHES

HUGHES AIRCRAFT COMPANY

ELECTRON DYNAMICS DIVISION

SPACECRAFT	TUBE TYPE	SATURATED OUTPUT		CENTER FREQUENCY GHz	NOMINAL TOTAL EFFICIENCY %	CATHODE LOADING A/cm^2	LIFE TEST		SPACE OPERATION		NOTE
		POWER WATTS	GAIN dB				NO. OF TUBES	TOTAL HOURS	NO. OF TUBES	TOTAL HOURS	
TACSAT	240H	20	43	7.25	25	.205	2	141,269	3	66,000	Thru 31 Aug 78
NASA Dev.	219H	20	37	8.45	35	.200	1	61,120	-	-	Thru 31 Aug 78
777	263H	0.6	32	7.5	15	.182	6	**	24	**	
777	265H	20	46	7.5	31	.185	6	**	24	**	
Skynet II	240HA	17	47	7.25	30	.195	8	53,700	2	32,784	Thru 28 Aug 78
NATO III	265HA	20	48	7.25	31	.190	6	**		**	
DSCS IIR, III	293H	40	50	7.5	50	.190	3	32,000			Thru 18 Sept 78
DSCS-III	298H	10	50	7.5	40	.180					
SIRIO	280H	10	40	11.5	30	.200	1	43,356	2	8,500	Thru 31 Aug 78
JBS	837HD	1.0	50	12.0	15	.145		**		**	
Skylab/GEOS	837HA	1.5	46	14.0	15	.145	1	93,020	1	100	Thru 31 Aug 78
Skylab	851H	20	40	14.0	25	.460	-	-	1	25	66% Duty
Skylab/GEOS	852H	2500	50	14.0	16	4.0	-	30 Apr 78	2	3,583	1% Duty, Impreg Cath. 9503 ON/OFF Cycles
Seasat	853H	2000	40	13.5	-	4.0			1		0.33% Duty, Impreg Cath.
Data Systems	837H	1.5	46	11.5	15	.145	3	40,817	25	667,126	Thru 19 Sept 78
JCS	292H	4.0	50	19.0	20	.190	-	-	-	-	
Comsat	267H	4.0	50	20.0	20	.155	-	-	-	-	
ATS	268H	2.0	42	20.0	15	.230	-	-	2	2,400	Thru 31 Jul 76
ATS	254H	2.0	42	30.0	10	.283	-	-	2	2,800	Thru 30 Sept 78
ECS	251H	3.0	43	31.0	20	.275	-	-	-	-	
TDRSS	845H	1.5	46	12.8	17	.156					
Space Shuttle	874H	60	42	14.4	46	.73					Impreg. Cathode
TWTAs											
1200H	263H	0.6	32	7.5	10	.182	6	326,107*	24	240,000	Thru 30 Sept 78
1202H	265H	20.0	46	7.5	22	.185	6	303,366*	24	240,000	Thru 30 Sept 78
1240H	265HA	20.0	48	7.25	22	.190	6	29,907	8	69,400	Thru 18 Sept 78
1238H	293H	40.0	53	7.5	34	.190	-	-	-	-	
1248H	298H	10.0	50	7.5	35						
1241H	293H	40	50	7.5	35	.190	1	5,769			Thru 16 Oct 78
1255H	293H	40	50	7.5	35	.190					
1292H	837HD	1.0	45	12.0	10	.145	1	9,819	3	2,160	Thru 30 Sept 78
1268H	845H	1.5	46	12.8	14	.156					
1256H	853H	2000	40	13.5	-	4.0			1	960	Thru 20 Aug 78
1218H	837HA	1.0	45	13.9	11	.145	-	-	1	100	
1220H	851H	20.0	40	13.9	20	.460	-	-	1	25	
1294H	292H	4.0	50	19.0	20				5		
1212H	267H	4.0	50	20.0	17	.155	-	-	-	-	
1254H	251H	3.0	43	31.0	15	.275					
DEVELOPMENT											
1247H	286HD	20.0	60	12.0	40	.190	8***	10,681			Thru 28 July 78
1247H	285H	20.0	40	8.5	50	.196					
	286HM	20.0	60	15.0	40	.190	-	-	-	-	
	287H	50.0	40	8.2	40	.330				-	
	274H	5.0	45	12.4	20	.280	-	-	-	-	

*As of 8-28-78

**See under TWTAs

***TWT only

30 Sept 78

HUGHES

HUGHES AIRCRAFT COMPANY

ELECTRON DYNAMICS DIVISION

1077H11

1 Watt 18 – 26.5 GHz TWTA

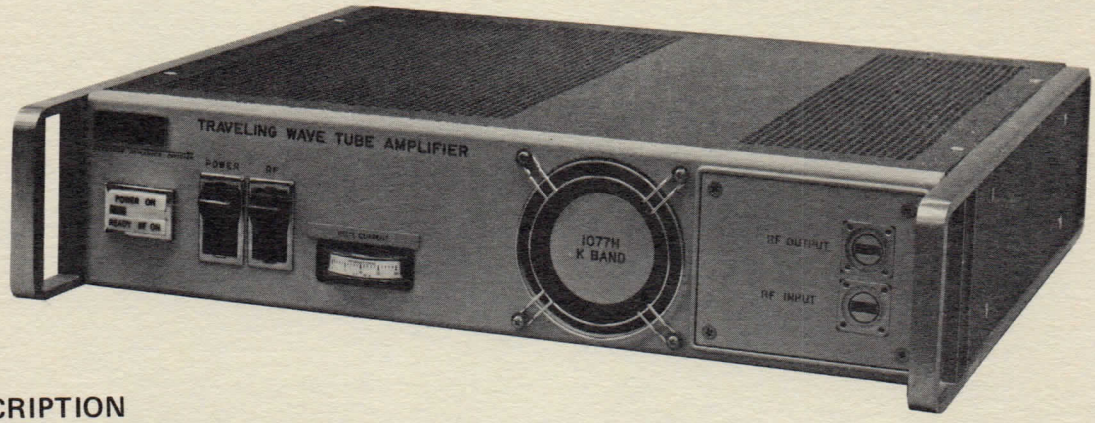

DESCRIPTION

The Hughes Model 1077H11 Traveling-Wave Tube Amplifier provides a minimum power output of 1 watt over the 18 – 26.5 GHz frequency range. The amplifier consists of a Hughes PPM metal-ceramic traveling-wave tube, a regulated solid state power supply and complete air cooling system assembled within a compact instrument case.

The design of the Hughes Model 911H traveling-wave tube utilized in the amplifier, was derived from knowledge gained in developing tubes for spacecraft and other applications where high reliability is of prime importance. This space-derived design allows us to warrant the complete amplifier package for a full year regardless of the hours of operation.

SPECIFICATIONS*

Electrical

Frequency	18 – 26.5 GHz
Power Output (minimum)	1 W
Duty	CW
Gain At Rated Power Output (minimum)	30 dB
Input Voltage	115 Vac 60 Hz
Power Consumption (maximum)	180 W
Noise Figure	35 dB
VSWR (cold) (maximum)	3:1

Mechanical

Size	15.5" x 16.75" x 3.5" (39.37 cm x 42.55 cm x 8.89 cm)
Weight (maximum)	20 pounds (9.07 kg)
Connectors (RF)	WR–42 waveguide

Environmental

Operating Temperature (ambient)	0° – 50°C

Warranty

One Year Regardless of Hours of Operation

Protective Features

Automatic Time Delay
Helix Current Overload
Thermal Overload

*Specifications are subject to change without prior notice.

1077H11

1 Watt 18 — 26.5 GHz TWTA

HUGHES

HUGHES AIRCRAFT COMPANY

ELECTRON DYNAMICS DIVISION

TYPICAL PERFORMANCE CURVES

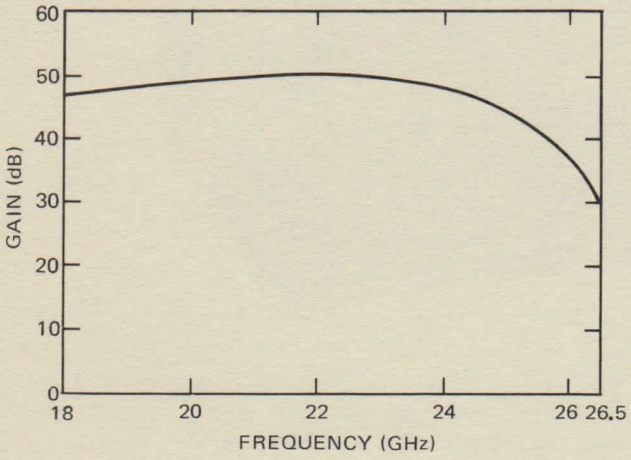

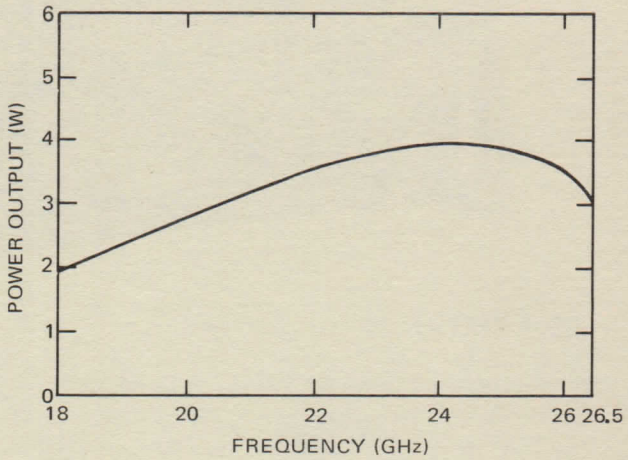

OUTLINE DRAWING

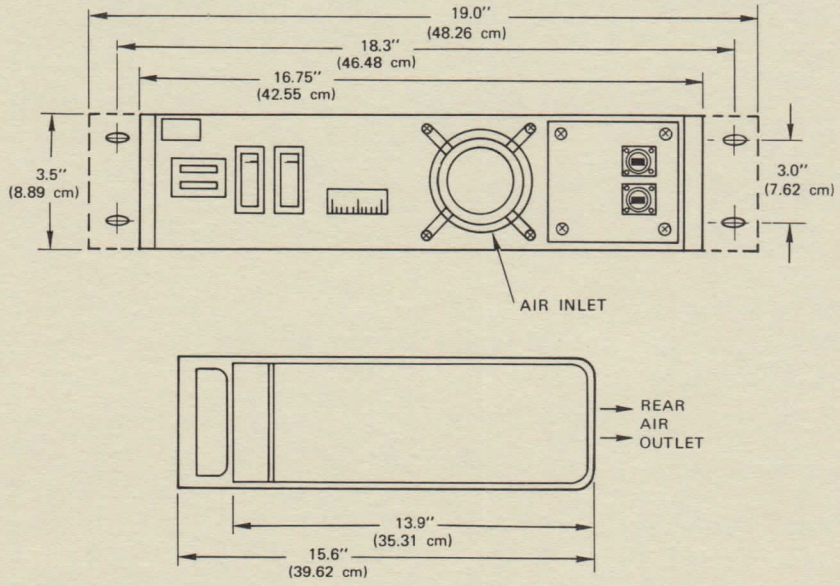

YOUR LOCAL REPRESENTATIVE

HUGHES
HUGHES AIRCRAFT COMPANY
ELECTRON DYNAMICS DIVISION 3100 West Lomita Boulevard, P.O. Box 2999. Torrance, California 90509. Tel (213) 534-2121

Printed in U.S.A. 11/79 AL

HUGHES

HUGHES AIRCRAFT COMPANY

ELECTRON DYNAMICS DIVISION

1077H12

1 Watt 26.5-40 GHz TWTA

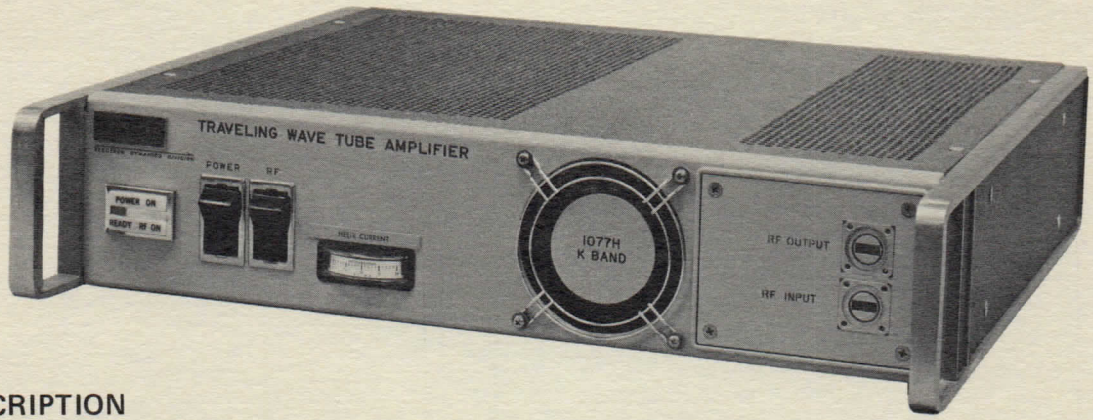

DESCRIPTION

The Hughes Model 1077H12 Traveling-Wave Tube Amplifier provides a minimum power output of 1 watt over the 26.5-40 GHz frequency range. The amplifier consists of a Hughes PPM metal-ceramic traveling-wave tube, a regulated solid state power supply and complete air cooling system assembled within a compact instrument case.

The design of the Hughes Model 912H traveling-wave tube utilized in the amplifier was derived from knowledge gained in developing tubes for spacecraft and other applications where high reliability is of prime importance. This space-derived design allows us to warrant the complete amplifier package for a full year regardless of the hours of operation.

SPECIFICATIONS*

Electrical

Frequency	26.5 - 40 GHz
Power Output (minimum)	1 W
Duty	CW
Gain At Rated Power Output (minimum)	30 dB
Input Voltage	115 Vac 60 Hz
Power Consumption (maximum)	180 W
Noise Figure	35 dB
VSWR (cold) (maximum)	3:1

Mechanical

Size	15.5" x 16.75" x 3.5" (39.37 cm x 42.55 cm x 8.89 cm)
Weight (maximum)	20 pounds (9.07 kg)
Connectors (RF)	WR-28 waveguide

Environmental

Operating Temperature (ambient)	0° – 50°C

Warranty

One Year Regardless of Hours of Operation

Protective Features

Automatic Time Delay
Helix Current Overload
Thermal Overload

*Specifications are subject to change without prior notice.

1077H12

1 Watt 26.5-40 GHz TWTA

HUGHES

HUGHES AIRCRAFT COMPANY

ELECTRON DYNAMICS DIVISION

TYPICAL PERFORMANCE CURVES

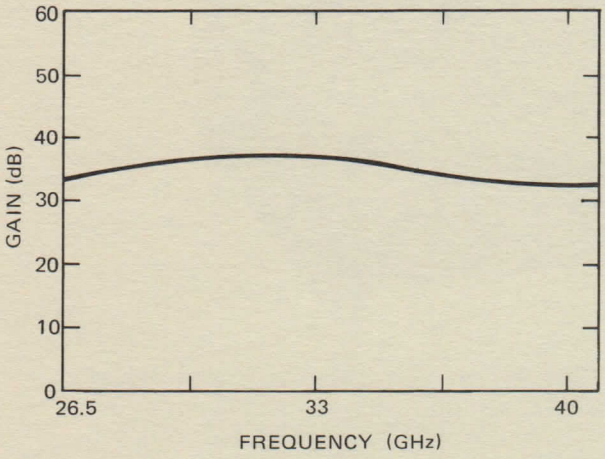

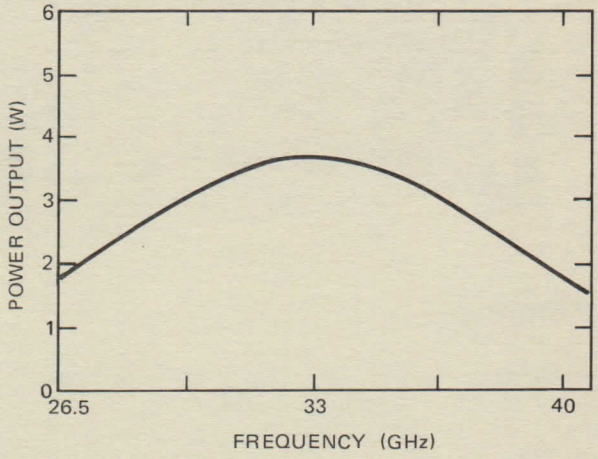

OUTLINE DRAWING

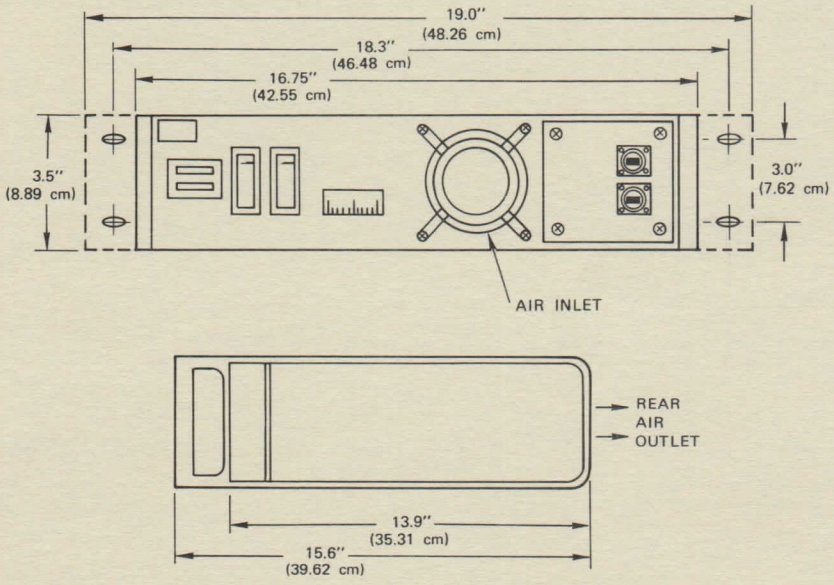

YOUR LOCAL REPRESENTATIVE

HUGHES
HUGHES AIRCRAFT COMPANY
ELECTRON DYNAMICS DIVISION 3100 West Lomita Boulevard, P.O. Box 2999. Torrance, California 90509. Tel (213) 534-2121

Printed in U.S.A. 6/80 AL

HUGHES

HUGHES AIRCRAFT COMPANY

ELECTRON DYNAMICS DIVISION

1288H

5 W 3.7 - 4.2 GHz TWTA

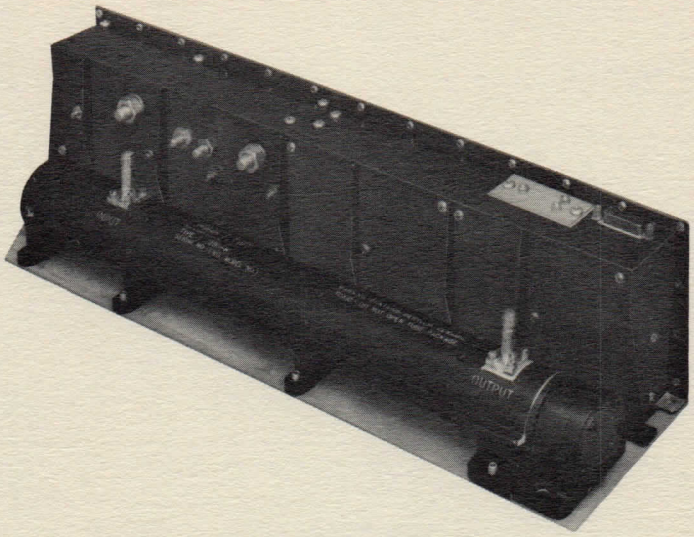

DESCRIPTION

The Hughes Model 1288H is a space qualified traveling-wave tube amplifier developed for the RCA Communications satellite. The small, light-weight amplifier is designed for long life and high reliability. This traveling-wave tube amplifier utilizes the Hughes Model 296H traveling-wave tube.

SPECIFICATIONS

ELECTRICAL

Frequency	3.7 – 4.2 GHz
Power Output	5 W
Duty	CW
Gain (saturation)	53 dB minimum
Input Voltage	24 – 36 Vdc
Power Consumption	17.7 W maximum
Telemetry (0 – 5 Vdc)	helix current
Noise Figure	28 dB maximum
Spurious Modulation (below carrier output)	60 dB minimum
VSWR	1.6:1 maximum

MECHANICAL

Cooling	conduction
Size	13.25" x 3.5" x 3.3" (33.66cm x 8.89cm x 8.38cm)
Weight	3.75 pounds (1.70kg)
Connectors (RF)	OSM
(dc)	24 pin MCD type

ENVIRONMENTAL

Operating Temperature	0° to 55° C

WARRANTY

Expected Life	7 years

PROTECTIVE FEATURES

Undervoltage
Current Overload

1288H

5 W 3.7 - 4.2 GHz TWTA

HUGHES

HUGHES AIRCRAFT COMPANY

ELECTRON DYNAMICS DIVISION

TYPICAL PERFORMANCE CURVE

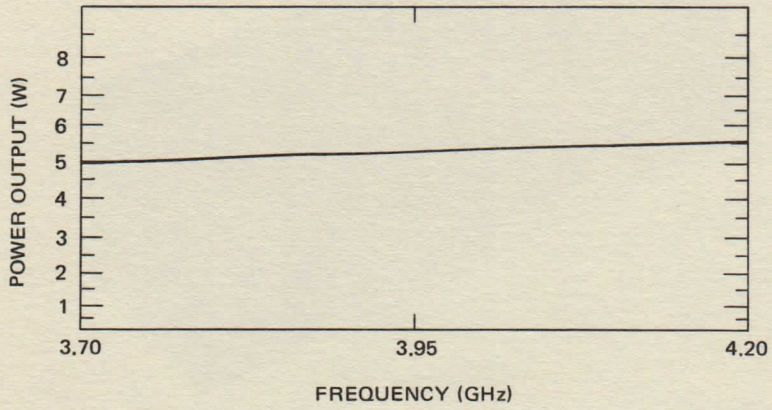

OUTLINE DRAWING

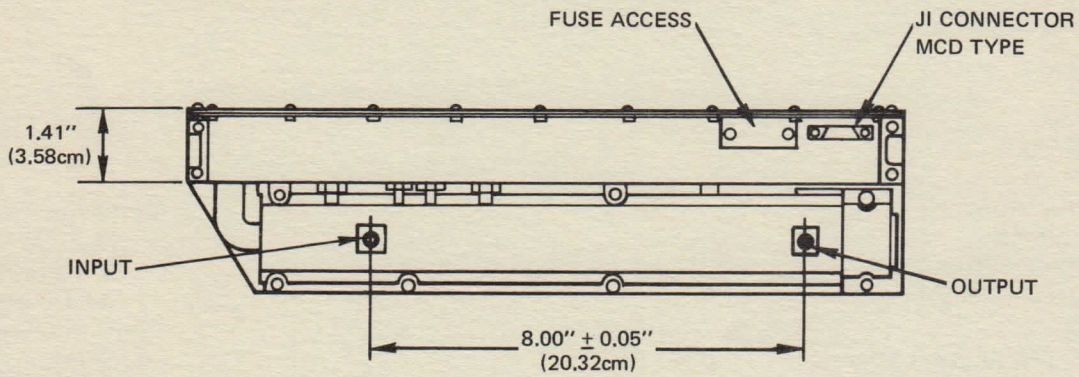

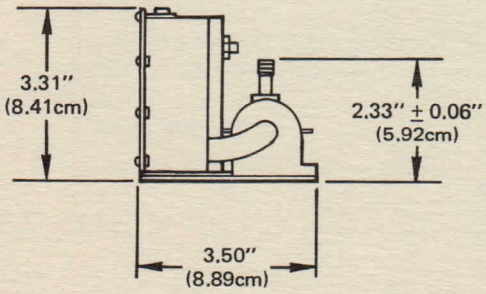

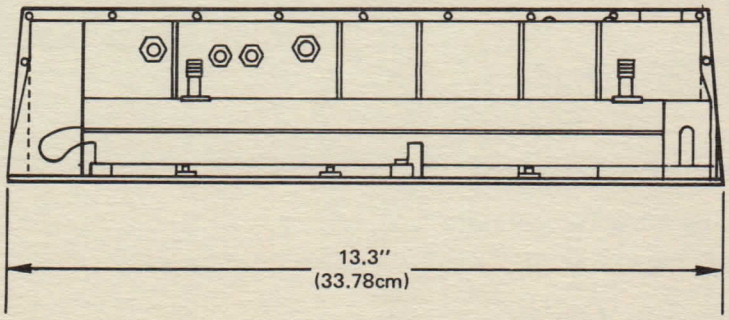

HUGHES ELECTRON DYNAMICS DIVISION INSTRUMENTATION AMPLIFIER PRODUCTS 3100 West Lomita Boulevard, Torrance, California 90509, Tel (213) 534-2121

HUGHES AIRCRAFT COMPANY

Printed in U.S.A. 11-74

HUGHES

HUGHES AIRCRAFT COMPANY

ELECTRON DYNAMICS DIVISION

1160H

2.5 kW pulsed TWT amplifier

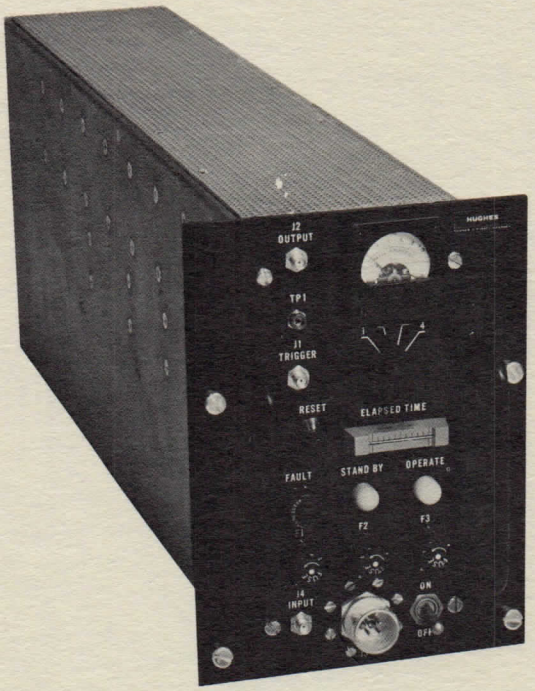

DESCRIPTION

The Hughes Model 1160H features a versatile, compact package containing two solid-state power supply modules, a magnetic modulator and two-stage RF amplifier section. The unit has a CW operated pre-driver traveling-wave tube and a cathode-pulsed high level traveling-wave tube driver. Applications include those for tactical radar.

SPECIFICATIONS

Radio Frequency	2900 – 3100 MHz
RF Power Input	0.25 mW
RF Power Output	2.5 kW
RF Gain	70 dB
Duty	0.0025 (in current application)
Power Input	115, 3ø, 400 cps, 1A
Cooling	conduction, maximum heat sink temperature 55°C
Pre-driver Tube Type	543H
Driver Tube Type	544H
Size	4 x 8 x 24 inches
Weight	28 pounds

1160H

2.5 kW pulsed TWT amplifier

HUGHES

HUGHES AIRCRAFT COMPANY

ELECTRON DYNAMICS DIVISION

BLOCK DIAGRAM

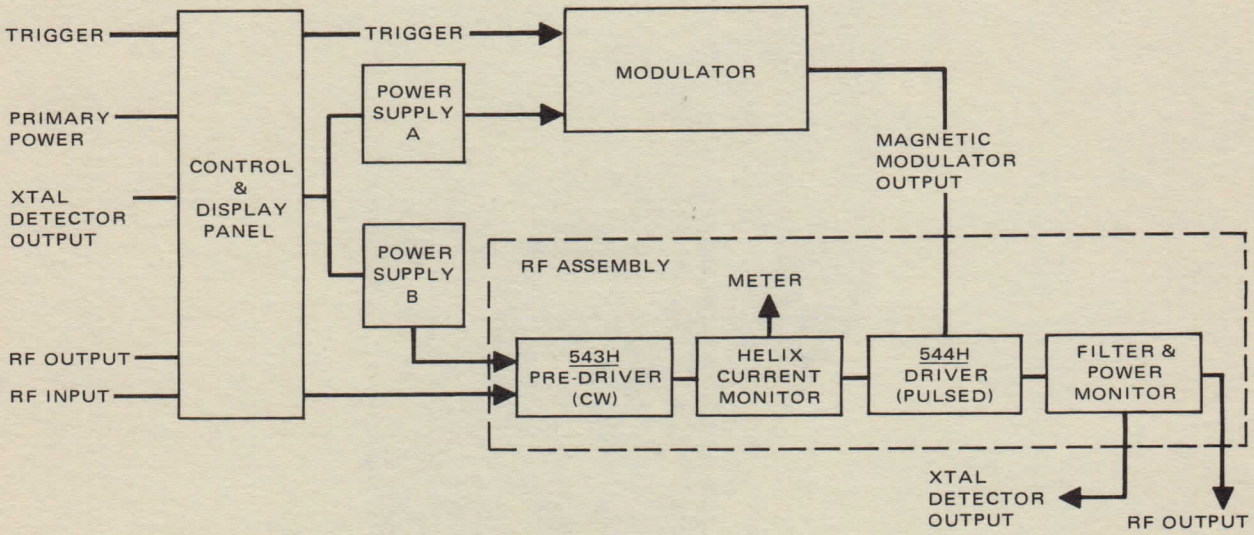

OUTLINE AND MOUNTING DRAWING

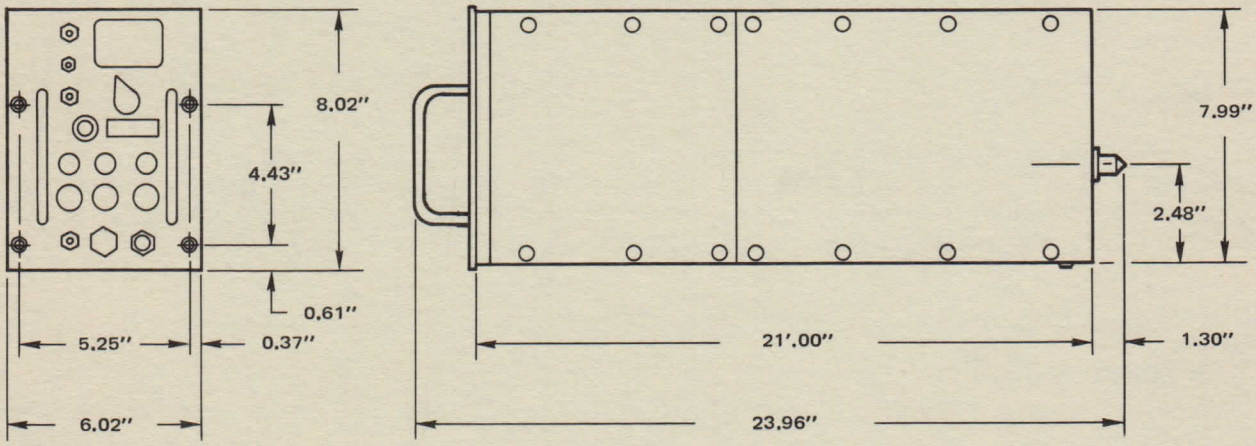

Specifications subject to change without notice.

YOUR LOCAL REPRESENTATIVE

HUGHES HUGHES AIRCRAFT COMPANY

ELECTRON DYNAMICS DIVISION / 3100 W. LOMITA BLVD. TORRANCE, CA. 90509/TEL (213) 534-2121

Printed in U.S.A.–3-73

HUGHES

HUGHES AIRCRAFT COMPANY

ELECTRON DYNAMICS DIVISION

STANDARD BAND 10 WATT TWT AMPLIFIERS 1177H Series

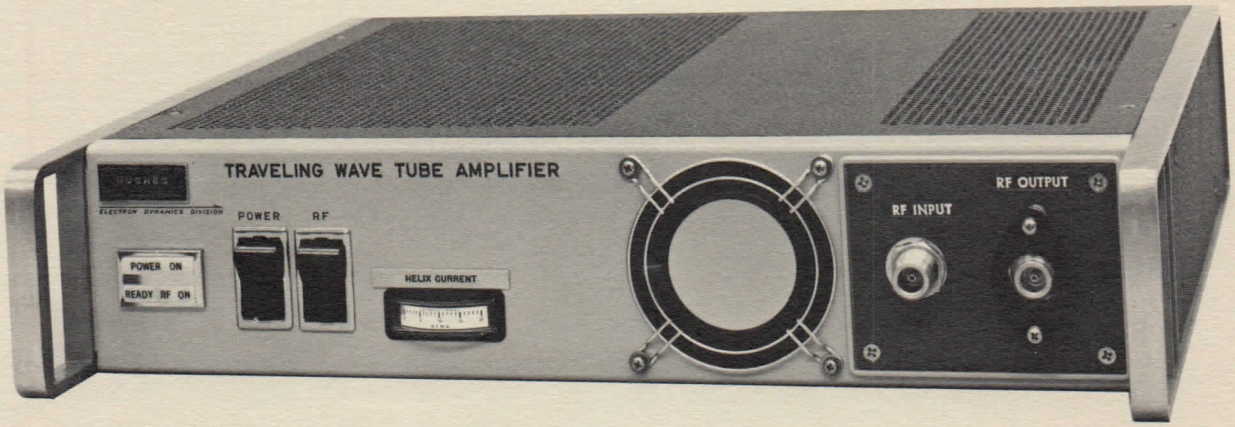

FEATURES

- 5 Models 1—18 GHz
- Standard Band Series
- 10 Watts Minimum
- Protective Features
- Lightweight – Compact
- Full One Year Warranty – No Hour Limit

APPLICATIONS

- RFI/EMI Testing
- Communications
- Antenna Testing
- Component Testing
- Laboratory Instrumentation
- System Testing

DESCRIPTION

The five models in the Hughes 1177H Series of Standard Band Traveling Wave Tube Amplifiers cover the 1 to 18 GHz frequency range with a minimum power output of 10 watts CW. Each amplifier consists of a PPM metal-ceramic traveling-wave tube, a regulated solid state power supply and complete air cooling system assembled within a compact instrument case.

The amplifiers utilize traveling-wave tubes developed for space applications. The knowledge gained in developing these 'space' tubes allows us to warrant the complete amplifier package for a full year, regardless of the hours of use.

The 1177H's light-weight compactness makes it ideal for either bench or 19-inch rack mounting. This size-weight feature is the result of the unique circuit design.

The 1177H has a wide variety of uses in such applications as EMI testing, antenna testing, communications, component testing, system testing and general laboratory requirements.

SPECIFICATIONS*

RF Performance

Model	Frequency	Power Output
1177H09	1.0 – 2.0 GHz	10 watts
1177H01	2.0 – 4.0 GHz	10 watts
1177H02	4.0 – 8.0 GHz	10 watts
1177H03	8.0 – 12.4 GHz	10 watts
1177H04	12.4 – 18.0 GHz	10 watts

Electrical

Gain at Rated Power Output (10W) . . . . . 30 dB minimum
Duty . . . . . CW
Input Voltage . . . . . 120 Vac ± 10%
Input Frequency . . . . . 50/60 Hz
Power Consumption . . . . . 250 W
Noise Figure . . . . . 35 dB maximum
Spurious Modulation (at saturation) . . . . . –50 dB minimum
VSWR . . . . . 3:1 maximum

Mechanical

Size/Configuration . . . . . See drawing
Weight . . . . . 20 pounds maximum
Connectors . . . . . N type female**

Environmental

Operating Temperature . . . . . 0-50°C ambient

Warranty

One full year regardless of the hours of operation.

Protective Features

Automatic time delay
Helix current overload
Thermal overload at TWT collector
RF output connector interlock**

To Order Specify

1177H	01	F –	OOO	Replacement Tubes
Series Number	**01** – 2.0 to 4.0 GHz **02** – 4.0 to 8.0 GHz **03** – 8.0 to 12.4 GHz **04** – 12.4 to 18.0 GHz **09** – 1.0 to 2.0 GHz	**F** – Front Panel Connector **R**† – Rear Panel Connector	**OOO** – Standard Unit **XXX** – Factory Assigned Special	564H 648HD 771HD 848HD 417HD

*Specifications subject to change without notice.

** 1177H04 uses SMA or WR62 waveguide, with UG419 Flange. With SMA or waveguide, the unit will not have RF interlock.

TYPICAL PERFORMANCE

Power Out and Gain at Rated Output Versus Frequency

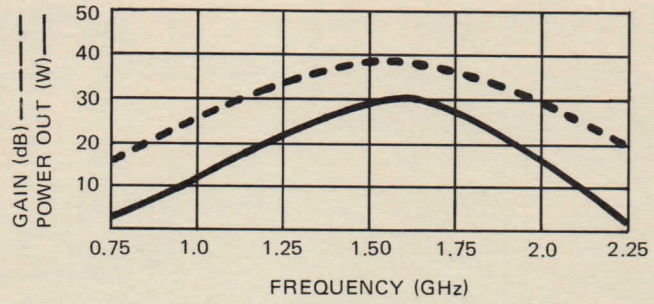

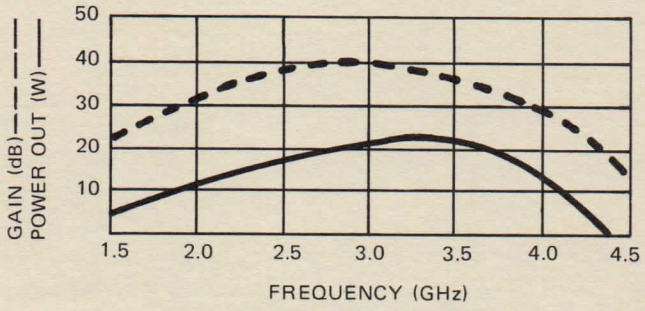

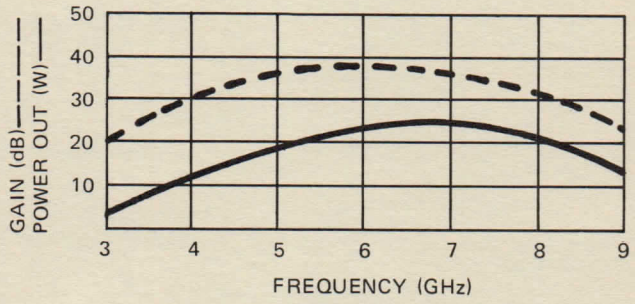

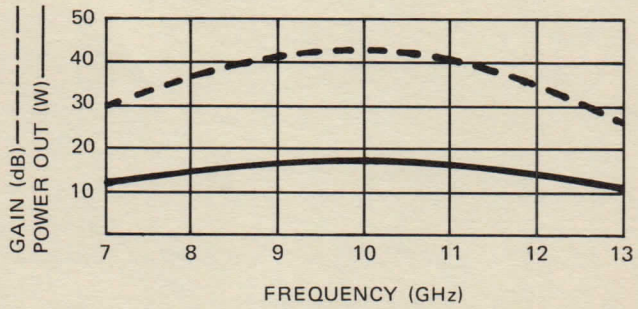

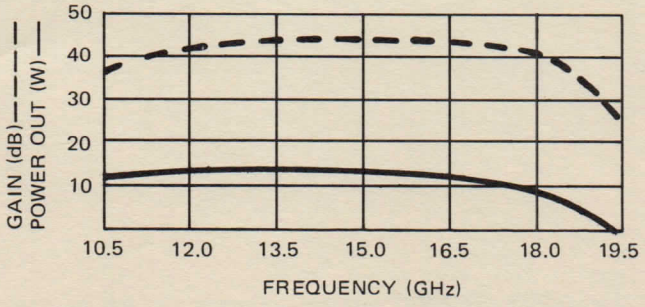

OUTLINE AND MOUNTING DRAWING

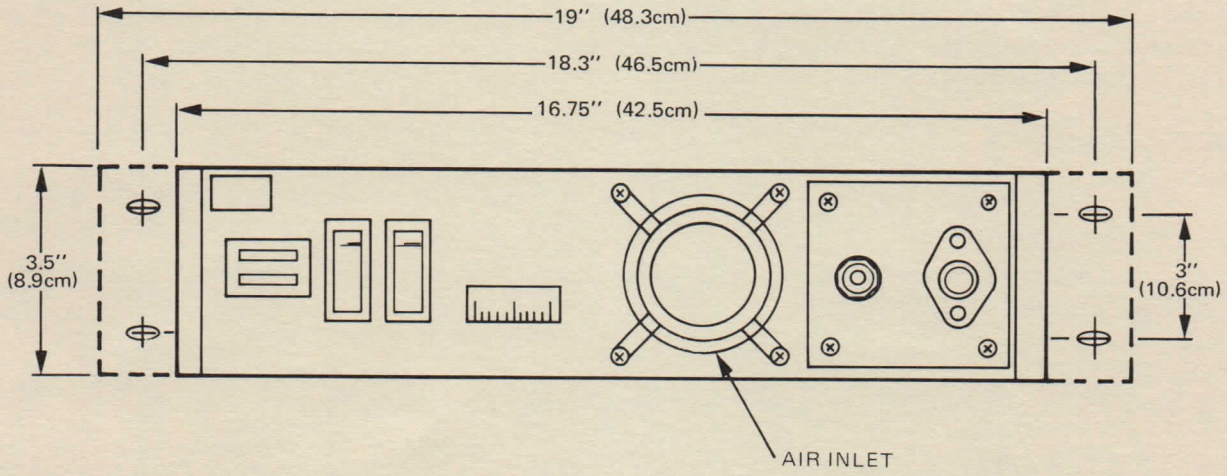

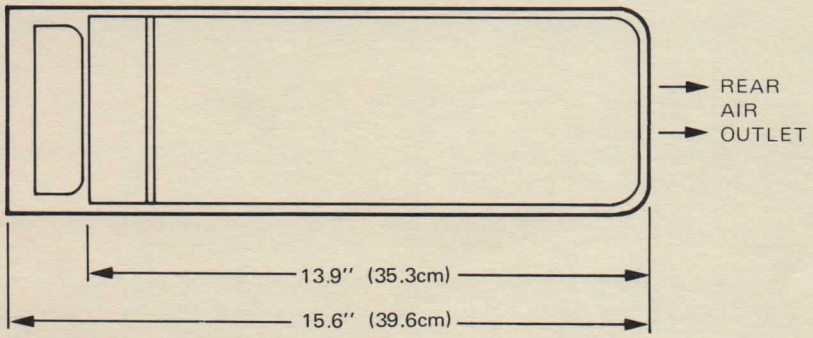

Note: L-band units have a modified rear panel for tube protection. Complete details available upon request.

OPTIONS LIST

OPTION A 220/240 V INPUT VOLTAGE

Auto-transformer for 220 Vac±10% or 240 Vac±10% at 50/60 Hz operation.

OPTION B DC HEATER SUPPLY (Included in all units)

Reduces spurious content.

OPTION C HELIX VOLTAGE REGULATOR (Included in all units)

Incorporates regulator in the helix circuit to improve the short and long term gain stability and reduce gain variations due to temperature effects. Prime importance for communications applications or where a high degree of gain stability is required.

OPTION D UNATTENDED PROTECTION

For unattended applications such as ranges, component aging, ground terminals, communication links. Protects the amplifier from possible damage from extended operation in the standby mode by turning off all power in the event of helix overload. To restart the unit, the ac power line must be interrupted or power switch cycled. The unit will then time-in with the normal (heater warm-up) time delay.

OPTION E RACKMOUNTING

For 19-inch rack mounting.

OPTION F LOCAL/REMOTE

Duplicates the amplifier's RF on switch and status lights up to a distance of 50 feet. Interface requires 15A contacts rated to make or break 150 VDC.

OPTION G 48 to 420 Hz

For operation from a primary AC power source at any input frequency from 48 to 420 Hz.

OPTION H LOGIC CIRCUIT (TTL)

For computer compatible (TTL) logic command and control circuitry which provide remote turn-on, turn-off, and reset functions, as well as full status indication. With this option, line power must be supplied through an isolation transformer external to the amplifier. Prime power (28 VDC) for these control circuits is supplied from an external input to the amplifier.

OPTION I 28 V INPUT VOLTAGE

For operation from a 28 (±3) volt dc bus for various airborne or special lab requirements. Negative or positive polarity must be specified at time of order. This option is not available for all units.

OPTION J ISOLATOR/CIRCULATORS

Protects the traveling-wave tube from varying VSWR conditions. All isolators are mounted within the amplifier with the exception of the 10W and 20W L-band, 20W Ku-band, and the 1W K- and Ka-band units. Due to the insertion loss of the isolator, some units may not meet the specified power out at band edges.

OPTION K HIGH GAIN

Adds a solid state amplifier at the input to the traveling-wave tube for higher gain when minimal drive power is available.

OPTION L AUTOMATIC RESET

In the event of a momentary fault condition, such as a line voltage surge, helix overload, or temporary RF power reflections, the unit reverts to "READY." This option automatically recycles the TWTA from "READY" to "RF ON" after the initial 3 minute time delay. Recycling can be set for 1 to 8 times or set to recycle continuously. If the fault condition continues after the predetermined number of reset cycles, the unit will revert to the "OFF" mode. The fault condition must then be cleared and the amplifier manually reset. This option is valuable in remote unattended sites, such as antenna ranges, satellite earth stations, and communication links.

OPTION M -28 OR -48V INPUT VOLTAGE

For -25 to -31 or -44 to -56 Vdc bus operation. Designed for telecommunication applications. May be ordered with positive voltage, must be specified at time of order.

STANDARD BAND
10 WATT
TWT AMPLIFIERS
1177H SERIES

HUGHES
HUGHES AIRCRAFT COMPANY
ELECTRON DYNAMICS DIVISION

SALES OFFICES

Arizona:

Odyssey 1
4558 W. Columbine Drive
Glendale 85304
602/246-8846

California:

Blair Associates
421 N. Brookhurst, Suite 220, Anaheim 92801
714/635-1350

MCH Associates
4100 Moorpark Ave., San Jose 95117
408/246-7330

Colorado:

FG Marketing Company
P.O. Box 1273
Englewood 80150
303/795-9176

Florida

E.G. Holmes & Associates, Inc.
316½ South Bumby St., Orlando 32802
305/894-8901

Georgia:

E.G. Holmes & Associates, Inc.
4185 Clairmont Rd., Chamblee 30341
404/451-6161

Maryland:

M. Lader Company, Inc.
P.O. Box 2308
6232 Copper Sky Court
Columbia 21045
301/730-1550

Missouri:

EIR Company
605 NW 44th Terrace
Kansas City 64116
816/452-7030

EIR Company
Rt. 1, Box 55, Leasburg, 65535
314/895-4100

New Hampshire:

JPR Electronic Sales
208 Coburn Woods
Nashua 03060
603/889-8285

New York:

Ascor Electronics, Inc.
559 North Avenue
New Rochelle 10801
914/235-8838

R.D. Sherman, Inc.
104½ Clinton Street
Fayetteville 13066
315/637-9861

Pennsylvania:

M. Lader Company, Inc.
460 Germantown Pike, Lafayette Hill 19444
215/825-3177

Washington:

Delcom Sales Company, Inc.
144 S.W. 153rd Street
Seattle 98166
206/248-0090

INTERNATIONAL OFFICES

Canada:

Giga-Tron Associates, Limited
7 Slack Road, Suite 205
Ottawa, Ontario K2G 0B7
613/225-4090

Other Countries:

Hughes Aircraft Company
Electron Dynamics Division
International Marketing
Post Office Box 2999
Torrance, California 90509
213/517-6820

Printed in U.S.A. 5/82 AL

HUGHES

HUGHES AIRCRAFT COMPANY

ELECTRON DYNAMICS DIVISION

MULTI-BAND 10–20 WATT TWT AMPLIFIERS 1177H Series

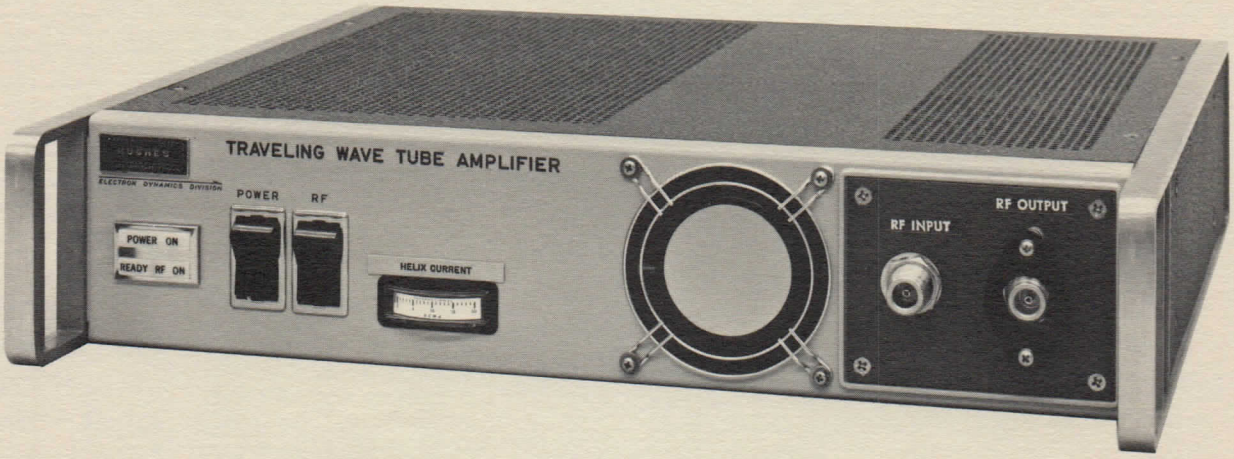

FEATURES

- 10 Models 1.4-18 GHz
- Protective Features
- Lightweight – Compact
- Full One Year Warranty – No Hour Limit

APPLICATIONS

- RFI/EMI Testing
- Communications
- Antenna Testing
- Component Testing
- Laboratory Instrumentation
- System Testing

DESCRIPTION

The ten models in the Hughes 1177H Series of the Multi-Band Traveling-Wave Amplifiers, cover the 1.4 to 4 and 4 to 18 GHz frequency range with a minimum power output of 20 and 10 watts CW. Each amplifier consists of a PPM metal-ceramic traveling-wave tube, a regulated solid state power supply and complete air cooling system assembled within a compact instrument case.

The amplifiers utilize traveling-wave tubes developed for space applications. The knowledge gained in developing these 'space' tubes allows us to warrant the complete amplifier package for a full year, regardless of the hours of use.

The 1177H's light-weight compactness makes it ideal for either bench or 19-inch rack mounting. This size-weight feature is the result of the unique circuit design.

These amplifiers have a wide variety of uses in such applications as EMI testing, antenna test patterns, communications, component testing, reflectometer systems, and general laboratory requirements.

SPECIFICATIONS*

RF Performance

MODEL	FREQUENCY	POWER OUTPUT
1177H05	2.5 – 4.0 GHz	20 watts
1177H06	4.0 – 10.5 GHz	10 watts[1]
1177H07	6.5 – 13.5 GHz	10 watts
1177H08	10.5 – 18.0 GHz	10 watts[2, 3]
1177H10	1.4 – 2.4 GHz	20 watts
1177H13	3.0 – 8.0 GHz	10 watts
1177H14	5.0 – 10.0 GHz	10 watts
1177H15	8.0 – 18.0 GHz	10 watts[2, 3]
1177H16	3.9 – 11.7 GHz	10 watts[1]
1177H17	7.0 – 16.5 GHz	10 watts

Electrical

Gain at Rated Power Output . . . . . 30 dB minimum [1]
Duty . . . . . CW
Input Voltage . . . . . 120 VAC ± 10%
Input Frequency . . . . . 50/60 Hz
Power Consumption . . . . . 250 W
Noise Figure . . . . . 35 dB maximum
Spurious Modulation (at saturation) . . . . . –50 dB minimum
VSWR . . . . . 3:1 maximum

Mechanical

Size/Configuration . . . . . See drawing
Weight . . . . . 20 pounds (44.1 kg) maximum
Connectors . . . . . Type N female [2]

Environmental

Operating Temperature . . . . . 0-50°C ambient

Warranty

One full year regardless of the hours of operation.

Protective Features

Automatic time delay
Helix current overload
Thermal overload
RF output connector interlock[3]

To Order Specify

1177H	01	F –	OOO	Replacement Tubes
Series Number	**05** – 2.5 – 4.0 GHz	**F** – Front Panel Connector	**OOO** – Standard Unit	564 HS
	06 – 4.0 – 10.5 GHz			648 HDS
	07 – 6.5 – 13.5 GHz			771 HDS
	08 – 10.5 – 18.0 GHz	**R** – Rear Panel Connector	**XXX** – Factory Assigned Unit	848 HDS
	10 – 1.4 – 2.4 GHz			419 H
	13 – 3.0 – 8.0 GHz			646 H
	14 – 5.0 – 10.0 GHz			746 H
	15 – 8.0 – 18.0 GHz			846 H
	16 – 3.9 – 11.7 GHz			664 H
	17 – 7.0 – 16.5 GHz			785 HD

*Specifications subject to change without notice.

1. Models 1177H06 and 1177H16 refer to typical performance curves for minimum gain and power output.
2. Model 1177H08 uses SMA or WR-62 waveguide with U/G-419/U flange as input and output connector, model 1177H15 uses SMA only. With waveguide output, RF performance will be degraded at low end of band.
3. Model 1177H08 and 1177H15 do not have an RF output interlock.

TYPICAL PERFORMANCE

Selected Series

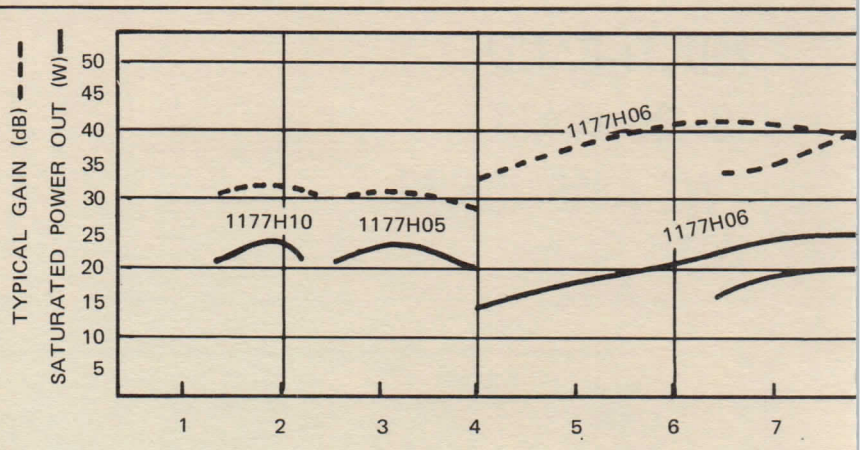

Broadband Series

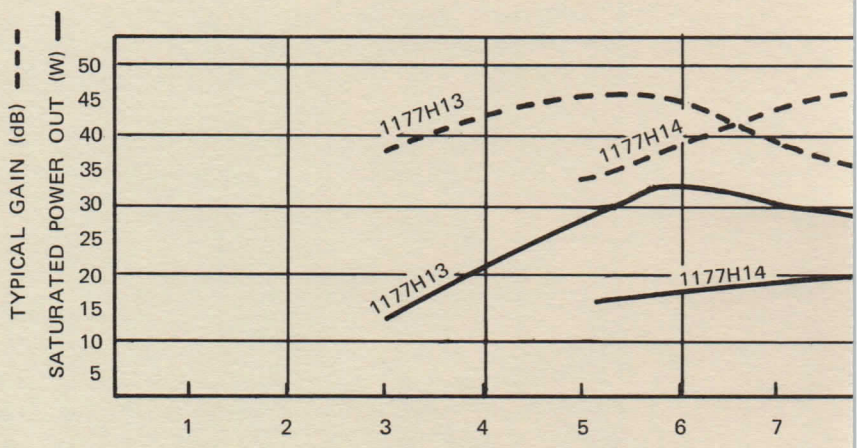

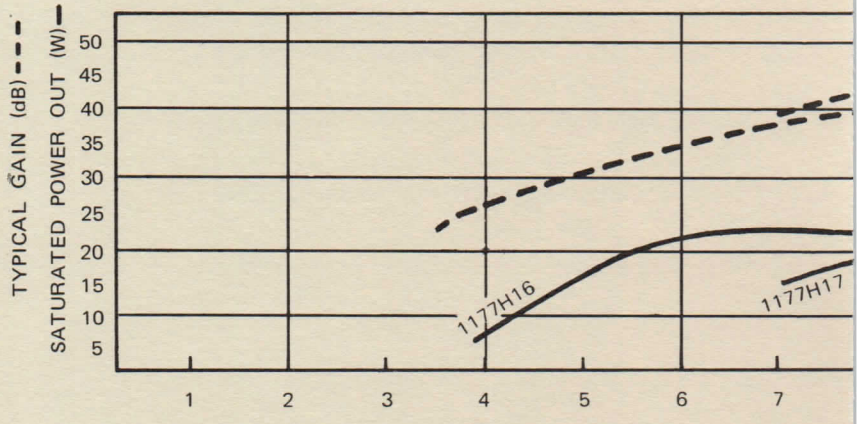

OUTLINE AND MOUNTING DRAWING

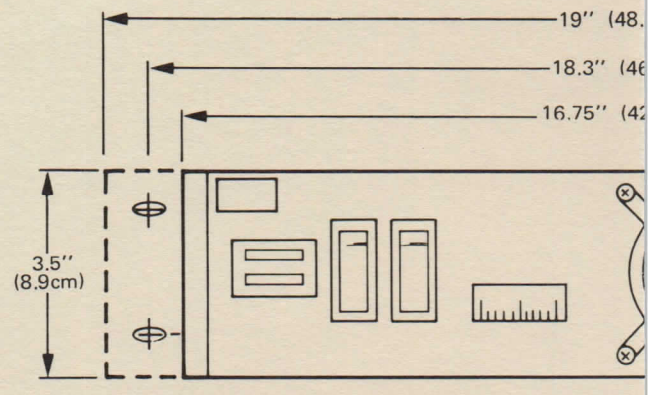

Note: L-band units have a modified rear panel for tube protection. Complete details available upon

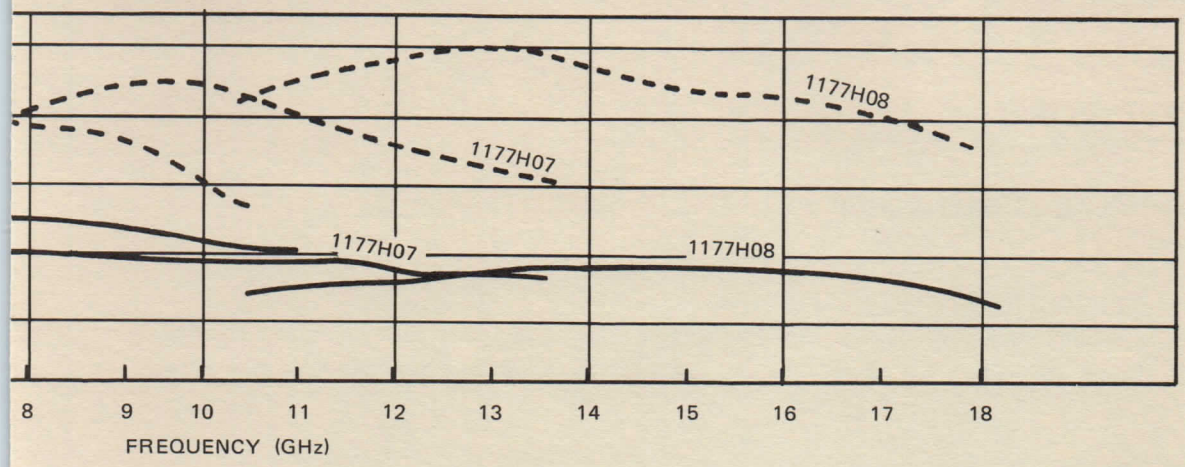
1177H08
1177H07
1177H07
1177H08
8 9 10 11 12 13 14 15 16 17 18
FREQUENCY (GHz)

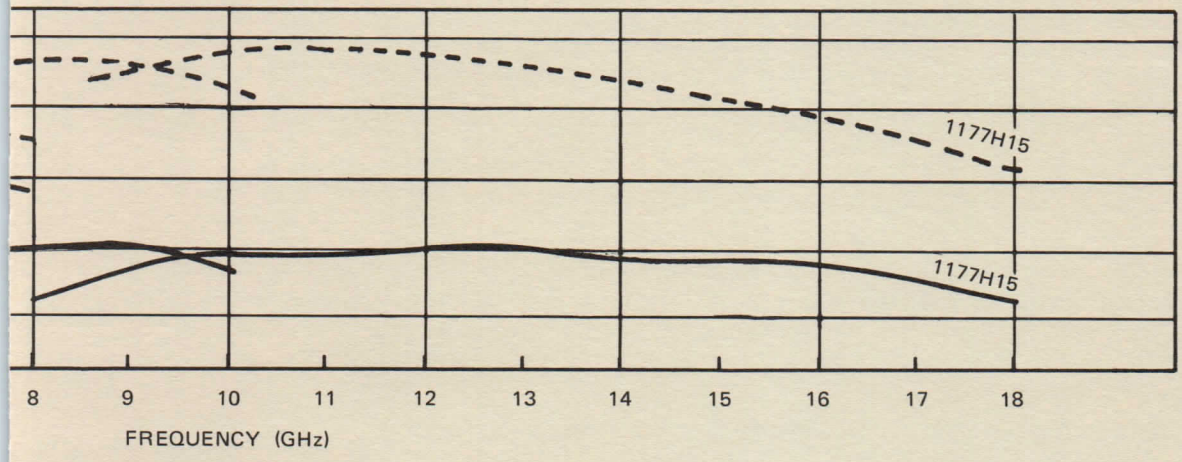
1177H15
1177H15
8 9 10 11 12 13 14 15 16 17 18
FREQUENCY (GHz)

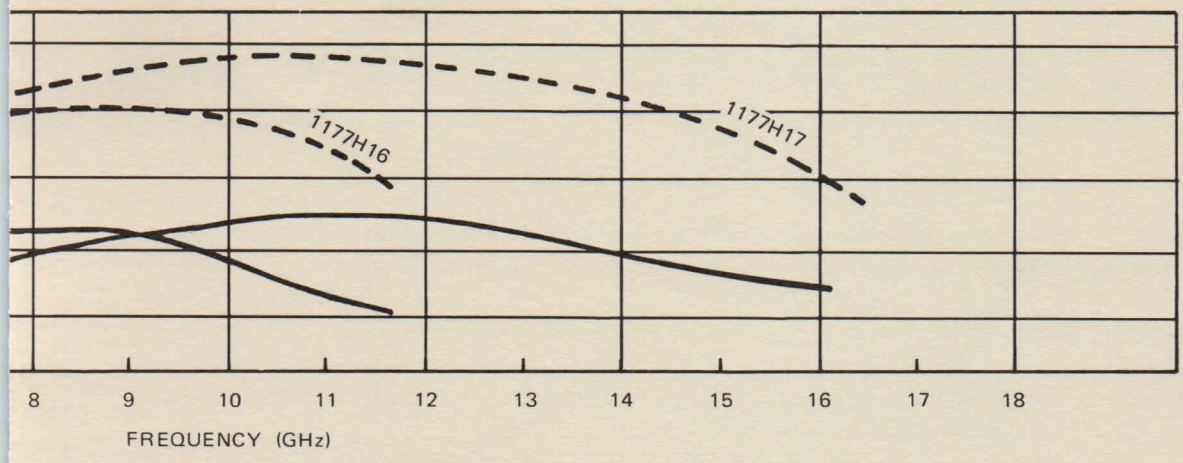
1177H16
1177H17
8 9 10 11 12 13 14 15 16 17 18
FREQUENCY (GHz)

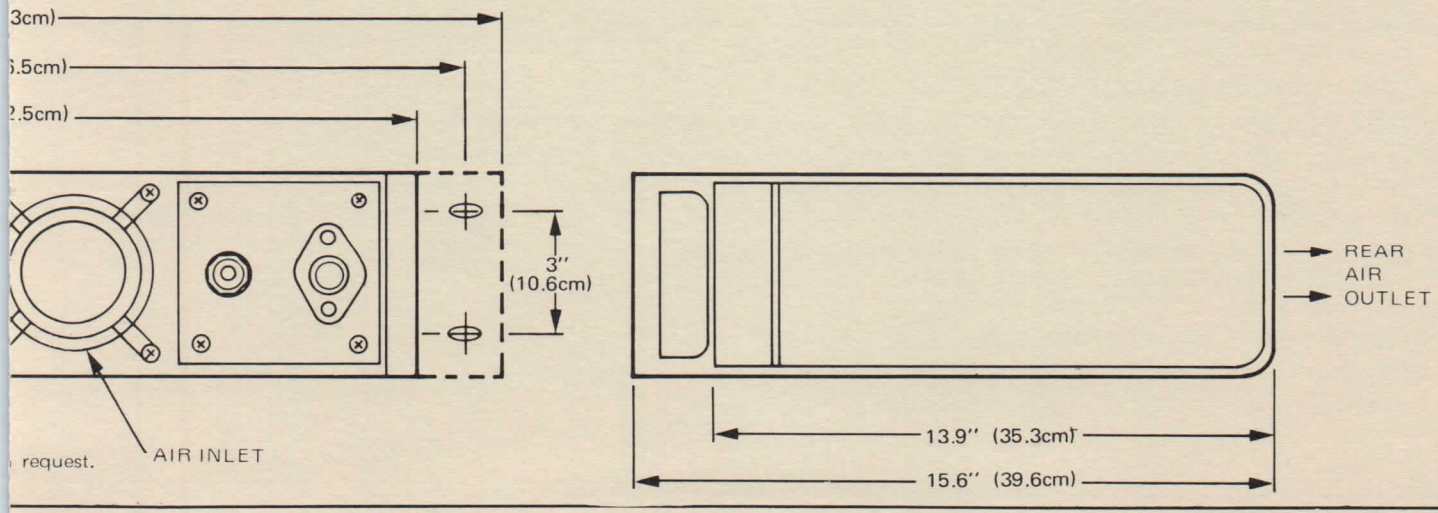
3cm)
.5cm)
.5cm)
3"
(10.6cm)
request.
AIR INLET
REAR
AIR
OUTLET
13.9" (35.3cm)
15.6" (39.6cm)

OPTIONS LIST

OPTION A 220/240 V INPUT VOLTAGE

Auto-transformer for 220 Vac±10% or 240 Vac±10% at 50/60 Hz operation.

OPTION B DC HEATER SUPPLY (Included in all units)

Reduces spurious content.

OPTION C HELIX VOLTAGE REGULATOR (Included in all units)

Incorporates regulator in the helix circuit to improve the short and long term gain stability and reduce gain variations due to temperature effects. Prime importance for communications applications or where a high degree of gain stability is required.

OPTION D UNATTENDED PROTECTION

For unattended applications such as ranges, component aging, ground terminals, communication links. Protects the amplifier from possible damage from extended operation in the standby mode by turning off all power in the event of helix overload. To restart the unit, the ac power line must be interrupted or power switch cycled. The unit will then time-in with the normal (heater warm-up) time delay.

OPTION E RACKMOUNTING

For 19-inch rack mounting.

OPTION F LOCAL/REMOTE

Duplicates the amplifier's RF on switch and status lights up to a distance of 50 feet. Interface requires 15A contacts rated to make or break 150 VDC.

OPTION G 48 to 420 Hz

For operation from a primary AC power source at any input frequency from 48 to 420 Hz.

OPTION H LOGIC CIRCUIT (TTL)

For computer compatible (TTL) logic command and control circuitry which provide remote turn-on, turn-off, and reset functions, as well as full status indication. With this option, line power must be supplied through an isolation transformer external to the amplifier. Prime power (28 VDC) for these control circuits is supplied from an external input to the amplifier.

OPTION I 28 V INPUT VOLTAGE

For operation from a 28 (±3) volt dc bus for various airborne or special lab requirements. Negative or positive polarity must be specified at time of order. This option is not available for all units.

OPTION J ISOLATOR/CIRCULATORS

Protects the traveling-wave tube from varying VSWR conditions. All isolators are mounted within the amplifier with the exception of the 10W and 20W L-band, 20W Ku-band, and the 1W K- and Ka-band units. Due to the insertion loss of the isolator, some units may not meet the specified power out at band edges.

OPTION K HIGH GAIN

Adds a solid state amplifier at the input to the traveling-wave tube for higher gain when minimal drive power is available.

OPTION L AUTOMATIC RESET

In the event of a momentary fault condition, such as a line voltage surge, helix overload, or temporary RF power reflections, the unit reverts to "READY." This option automatically recycles the TWTA from "READY" to "RF ON" after the initial 3 minute time delay. Recycling can be set for 1 to 8 times or set to recycle continuously. If the fault condition continues after the predetermined number of reset cycles, the unit will revert to the "OFF" mode. The fault condition must then be cleared and the amplifier manually reset. This option is valuable in remote unattended sites, such as antenna ranges, satellite earth stations, and communication links.

OPTION M -28 OR -48V INPUT VOLTAGE

For -25 to -31 or -44 to -56 Vdc bus operation. Designed for telecommunication applications. May be ordered with positive voltage, must be specified at time of order.

MULTI-BAND 10–20 WATT TWT AMPLIFIERS 1177H Series

HUGHES
HUGHES AIRCRAFT COMPANY
ELECTRON DYNAMICS DIVISION

SALES OFFICES

Arizona:

Odyssey 1
4558 W. Columbine Drive
Glendale 85304
602/246-8846

California:

Blair Associates
421 N. Brookhurst, Suite 220, Anaheim 92801
714/635-1350

MCH Associates
4100 Moorpark Ave., San Jose 95117
408/246-7330

Colorado:

FG Marketing Company
P.O. Box 1273
Englewood 80150
303/795-9176

Florida

E.G. Holmes & Associates, Inc.
316½ South Bumby St., Orlando 32802
305/894-8901

Georgia:

E.G. Holmes & Associates, Inc.
4185 Clairmont Rd., Chamblee 30341
404/451-6161

Maryland:

M. Lader Company, Inc.
P.O. Box 2308
6232 Copper Sky Court
Columbia 21045
301/730-1550

Missouri:

EIR Company
605 NW 44th Terrace
Kansas City 64116
816/452-7030

EIR Company
Rt. 1, Box 55, Leasburg, 65535
314/895-4100

New Hampshire:

JPR Electronic Sales
208 Coburn Woods
Nashua 03060
603/889-8285

New York:

Ascor Electronics, Inc.
559 North Avenue
New Rochelle 10801
914/235-8838

R.D. Sherman, Inc.
104½ Clinton Street
Fayetteville 13066
315/637-9861

Pennsylvania:

M. Lader Company, Inc.
460 Germantown Pike, Lafayette Hill 19444
215/825-3177

Washington:

Delcom Sales Company, Inc.
144 S.W. 153rd Street
Seattle 98166
206/248-0090

INTERNATIONAL OFFICES

Canada:

Giga-Tron Associates, Limited
7 Slack Road, Suite 205
Ottawa, Ontario K2G 0B7
613/225-4090

Other Countries:

Hughes Aircraft Company
Electron Dynamics Division
International Marketing
Post Office Box 2999
Torrance, California 90509
213/517-6820

Printed in U.S.A. 5/82 AL

HUGHES

HUGHES AIRCRAFT COMPANY

ELECTRON DYNAMICS DIVISION

1177H03 SERIES

BROADBAND MICROWAVE AMPLIFIERS

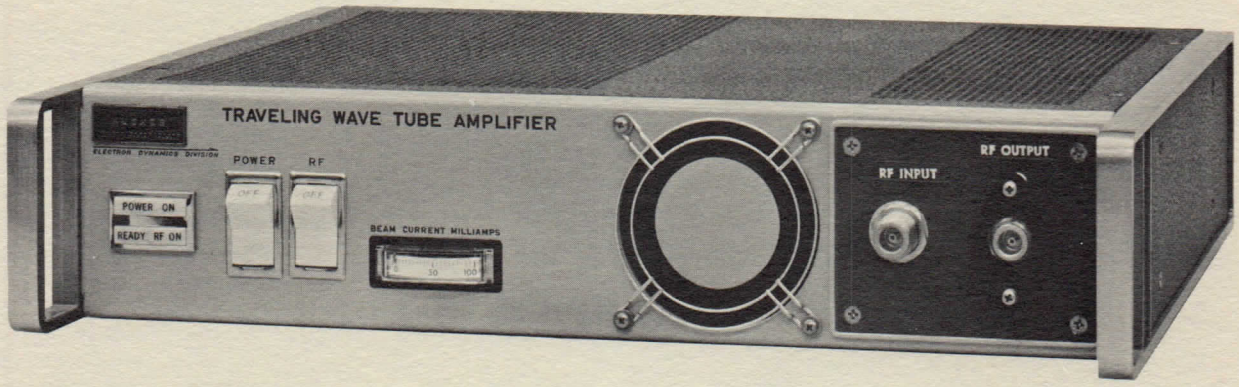

DESCRIPTION

The Hughes 1177H03 Series of amplifiers were designed for communications and ECM applications. The series consists of three broadband instrumentation amplifiers providing coverage in the frequency range of 3.7 to 16.3 GHz. With a midband gain and power output in excess of 50 dB and 10 watts respectively, the amplifiers provide several watts of output power at the band edges.

Each amplifier features a solid-state power converter and metal-ceramic output traveling-wave tube similar in design to the tubes used in the Hughes communication satellites. They are completely protected, both thermally and electrically, with an internal air cooling system operating from 115 volts, 50/60 Hz, single-phase power.

These amplifiers weigh only 24 pounds, making them particularly suited for transportation to remote sites. They can be mounted in a 19-inch relay rack with a panel height of 3½ inches and a maximum depth of 20 inches. They carry a one-year warranty with no limit on the hours of operation.

SPECIFICATIONS*

RF PERFORMANCE

1177H03F** – 003

Frequency (GHz)	7.4	8.0	9.0	10.0	11.0	12.0	13.0	14.0	15.0	16.0
Power Output (min. w)	10.0	10.0	10.0	10.0	10.0	10.0	10.0	10.0	5.0	5.0
Gain (min.)	30	30	30	30	30	30	30	30	24	22

1177H03F** – 005

Frequency (GHz)	3.9	4.0	5.0	6.0	7.0	8.0	9.0	10.0	11.0	11.7
Power Output	2.0	2.5	6.0	9.0	10.0	10.0	10.0	10.0	10.0	10.0
Gain (min.)	22	25	34	36	50	50	50	50	46	40

1177H03F** – 007

Frequency (GHz)	7.9	8.0	9.0	10.0	11.0	12.0	13.0	14.0	15.0	16.3
Power Output (min. w)	10.0	10.0	10.0	10.0	10.0	10.0	10.0	10.0	5.0	5.0
Gain (min.)	30	30	30	30	30	30	30	30	24	22

ELECTRICAL

Duty . . . . . CW
Input Voltage . . . . . 120 VAC ± 10% †
Input Frequency . . . . . 50/60 Hz †
Power Consumption . . . . . 250 W
Noise Figure . . . . . 35 dB maximum
Spurious Modulation . . . . . –35 dB minimum
VSWR . . . . . 3:1 maximum

MECHANICAL

Length . . . . . 15.5 inches
Width . . . . . 16.75 inches
Height . . . . . 3.5 inches
Weight . . . . . 30 pounds maximum
Connectors . . . . . Type N female

ENVIRONMENTAL

Operating Temperature . . . . . 0-50°C ambient

WARRANTY

One full year regardless of the hours of operation.

PROTECTIVE FEATURES

Automatic time delay
Helix current overload
Thermal overload
RF output connector interlock

REPLACEMENT TUBES

1177H03F–003 . . . . . 785H01
1177H03F–005 . . . . . 785H02
1177H03F–007 . . . . . 785H01

* Specifications subject to change without notice.
** For rear panel connector, use "R" in place of "F" when ordering.
† 230 VAC, 50 Hz available as an option.

PERFORMANCE CURVES

TYPICAL SATURATED POWER OUTPUT VERSUS FREQUENCY

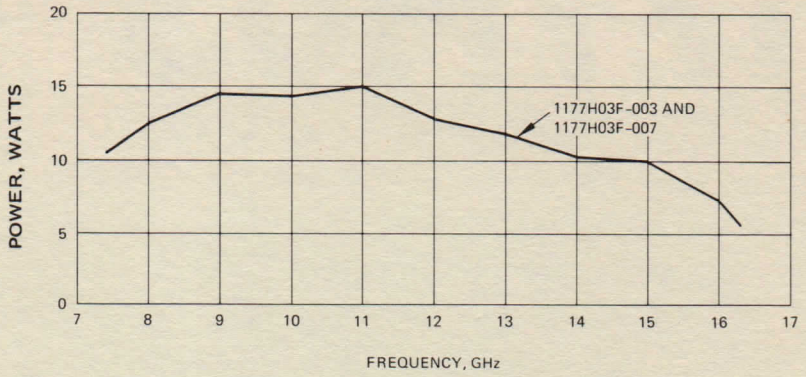

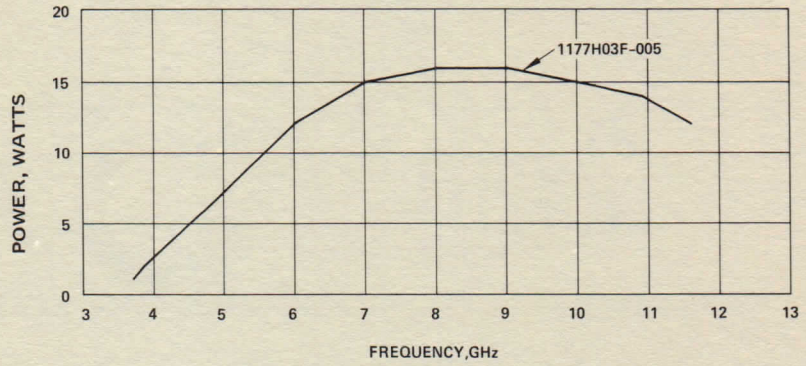

TYPICAL SATURATED GAIN VERSUS FREQUENCY

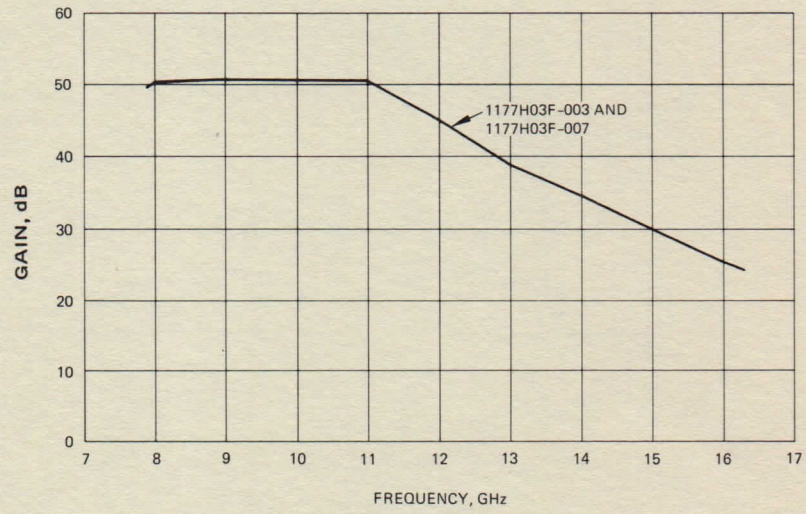

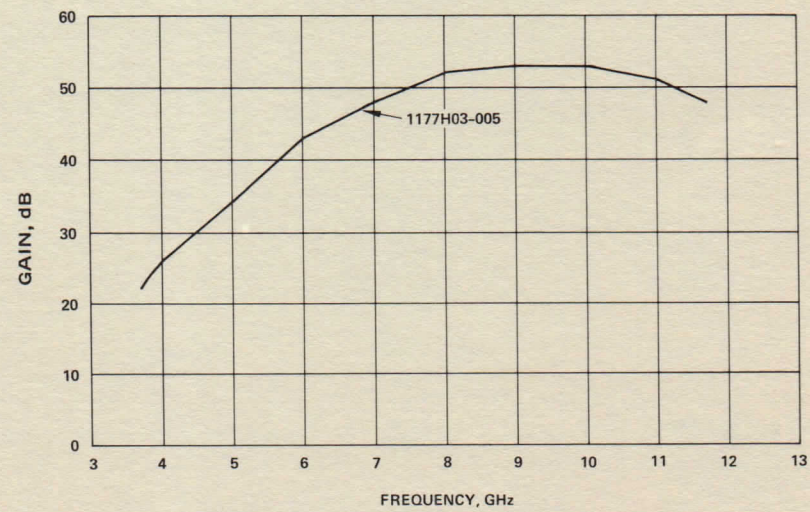

1177H03 SERIES

BROADBAND MICROWAVE AMPLIFIERS

HUGHES

HUGHES AIRCRAFT COMPANY

ELECTRON DYNAMICS DIVISION

OUTLINE AND MOUNTING DRAWING

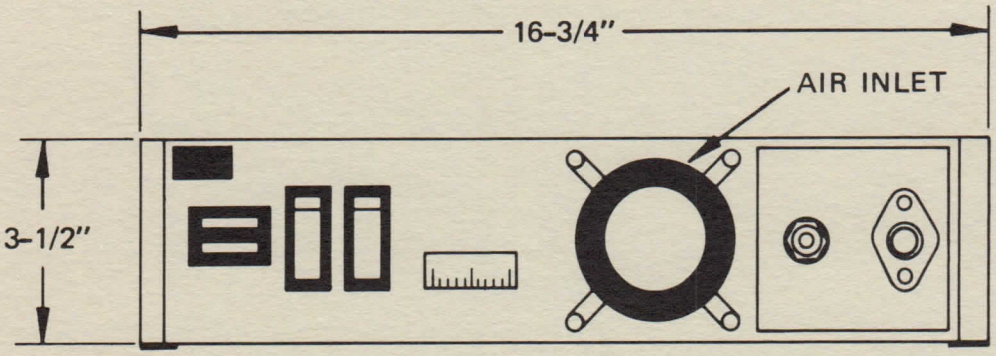

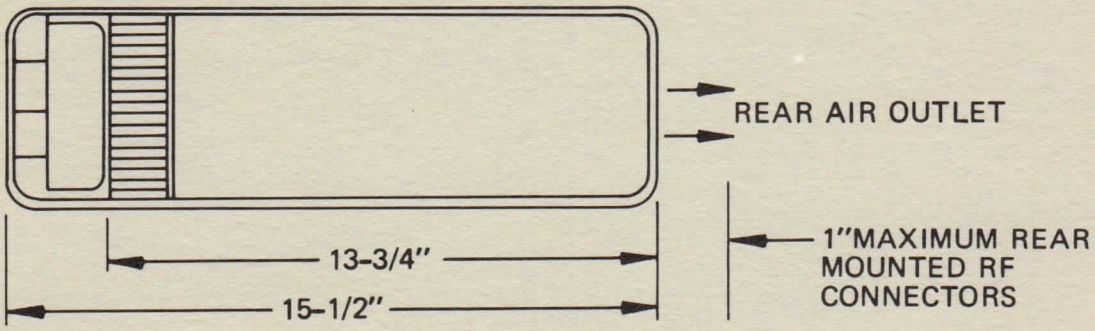

YOUR LOCAL REPRESENTATIVE

HUGHES
HUGHES AIRCRAFT COMPANY

ELECTRON DYNAMICS DIVISION / 3100 W. LOMITA BLVD. TORRANCE, CA. 90509 / TEL (213) 534-2121

Printed in U.S.A.– 2-72

HUGHES

HUGHES AIRCRAFT COMPANY

ELECTRON DYNAMICS DIVISION

1077H11

1 Watt 18 — 26.5 GHz TWTA

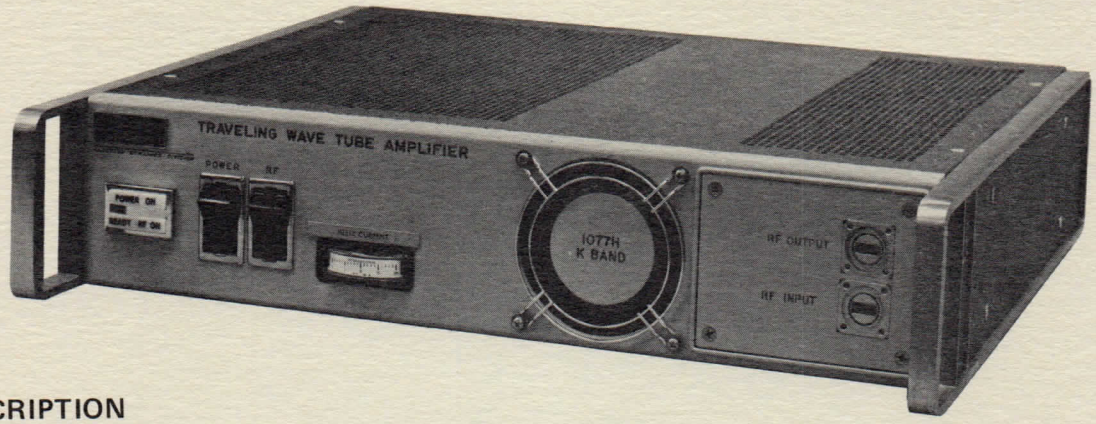

DESCRIPTION

The Hughes Model 1077H11 Traveling-Wave Tube Amplifier provides a minimum power output of 1 watt over the 18 — 26.5 GHz frequency range. The amplifier consists of a Hughes PPM metal-ceramic traveling-wave tube, a regulated solid state power supply and complete air cooling system assembled within a compact instrument case.

The design of the Hughes Model 911H traveling-wave tube utilized in the amplifier, was derived from knowledge gained in developing tubes for spacecraft and other applications where high reliability is of prime importance. This space-derived design allows us to warrant the complete amplifier package for a full year regardless of the hours of operation.

SPECIFICATIONS*

Electrical

Frequency	18 — 26.5 GHz
Power Output (minimum)	1 W
Duty	CW
Gain At Rated Power Output (minimum)	30 dB
Input Voltage	115 Vac 60 Hz
Power Consumption (maximum)	180 W
Noise Figure	35 dB
VSWR (cold) (maximum)	3:1

Mechanical

Size	15.5" x 16.75" x 3.5" (39.37 cm x 42.55 cm x 8.89 cm)
Weight (maximum)	20 pounds (9.07 kg)
Connectors (RF)	WR—42 waveguide

Environmental

Operating Temperature (ambient)	0° — 50°C

Warranty

One Year Regardless of Hours of Operation

Protective Features

Automatic Time Delay
Helix Current Overload
Thermal Overload

*Specifications are subject to change without prior notice.

1077H11

1 Watt 18 — 26.5 GHz TWTA

HUGHES

HUGHES AIRCRAFT COMPANY

ELECTRON DYNAMICS DIVISION

TYPICAL PERFORMANCE CURVES

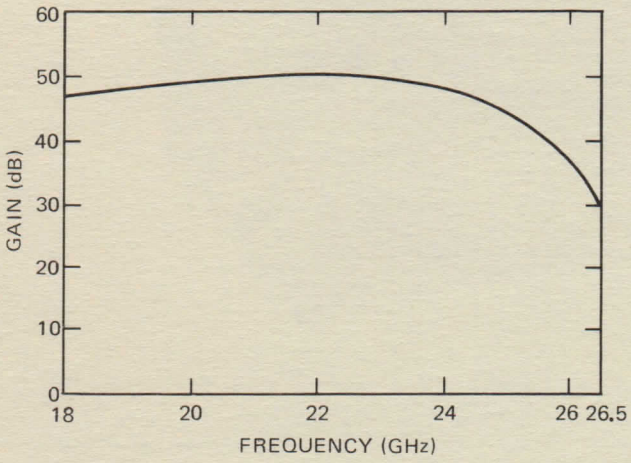

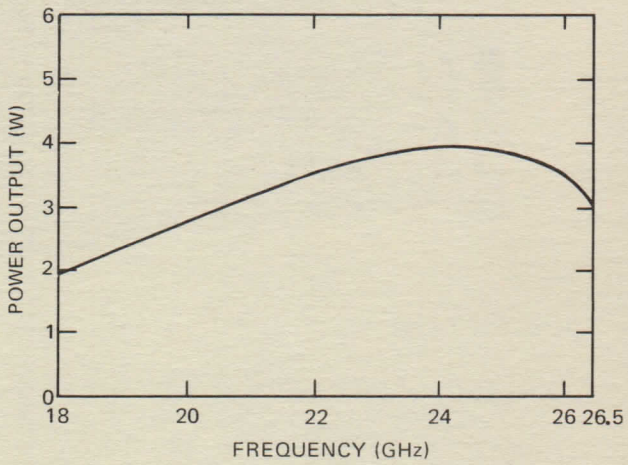

OUTLINE DRAWING

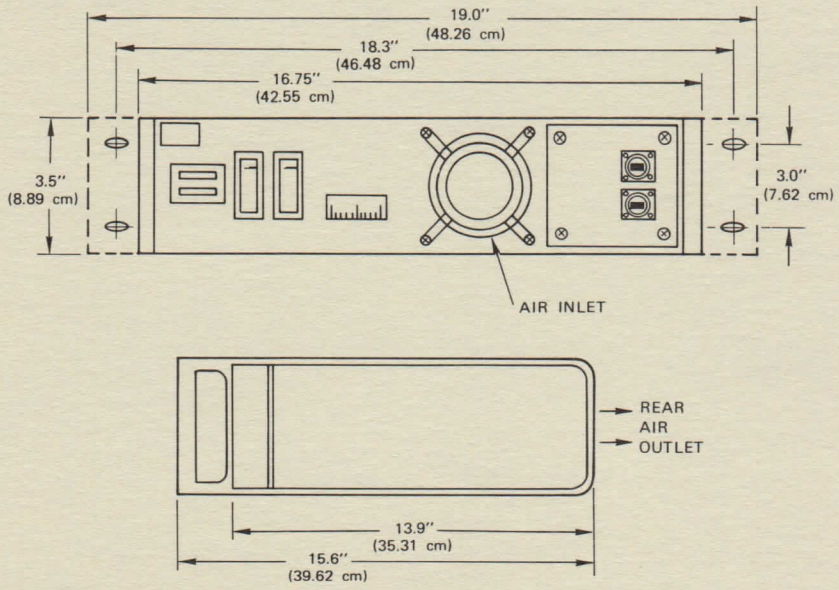

YOUR LOCAL REPRESENTATIVE

HUGHES
HUGHES AIRCRAFT COMPANY
ELECTRON DYNAMICS DIVISION 3100 West Lomita Boulevard, P.O. Box 2999. Torrance, California 90509. Tel (213) 534-2121

Printed in U.S.A. 11/79 AL

HUGHES

ELECTRON DYNAMICS DIVISION

1190H

10-15W 2.2-2.3 GHz CW TWTA

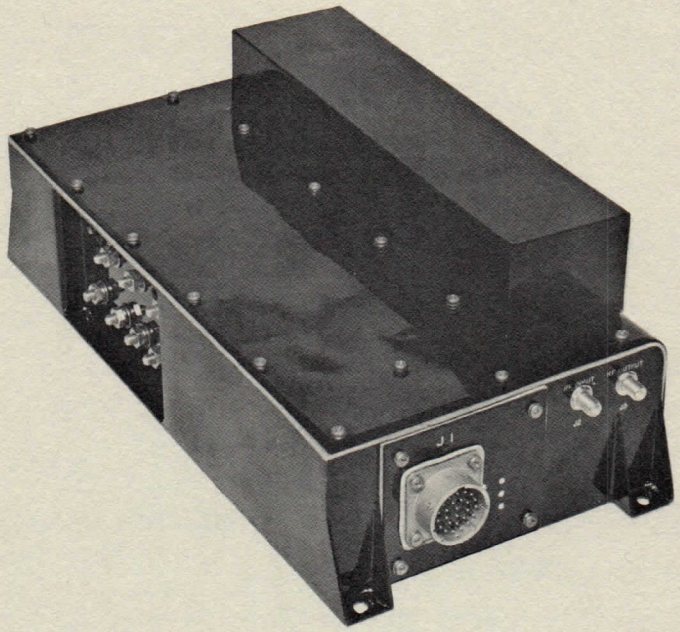

DESCRIPTION

The Hughes Model 1190H is a 10-15 watt S-band traveling-wave tube amplifier with or without band-pass filter (filter band-pass 2.2 to 2.3 GHz). The unit is qualified for space utilizing the Model 256H traveling-wave tube manufactured by the Hughes Electron Dynamics Division.

SPECIFICATIONS

Frequency (with Filter)	2.2 - 2.3 GHz
Power Output	10-15 W
Duty	CW
Gain (Saturated)	30 dB Minimum
Input Voltage	22-32 V dc
Input Power	60 W Maximum
Telemetry Outputs (0-5 V dc)	
Heater Voltage	
Helix Current	
Cathode Current	
Collector Voltage	
Collector Temperature	
Cooling	Conduction
Weight	8.5 Pounds Maximum
Size	11 x 6 x 4.2 Inches
Connectors	
RF	OSM
DC Input	Bendix (21-200216-26P)
Expected Life	5 Years Minimum

1190H

10-15W 2.2-2.3 GHz CW TWTA

HUGHES

ELECTRON DYNAMICS DIVISION

PERFORMANCE CURVE

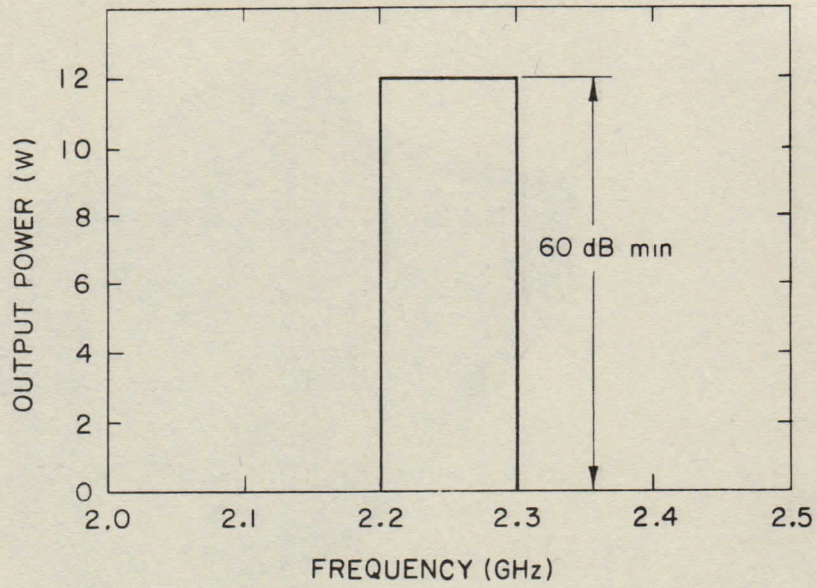

OUTLINE AND MOUNTING DRAWING

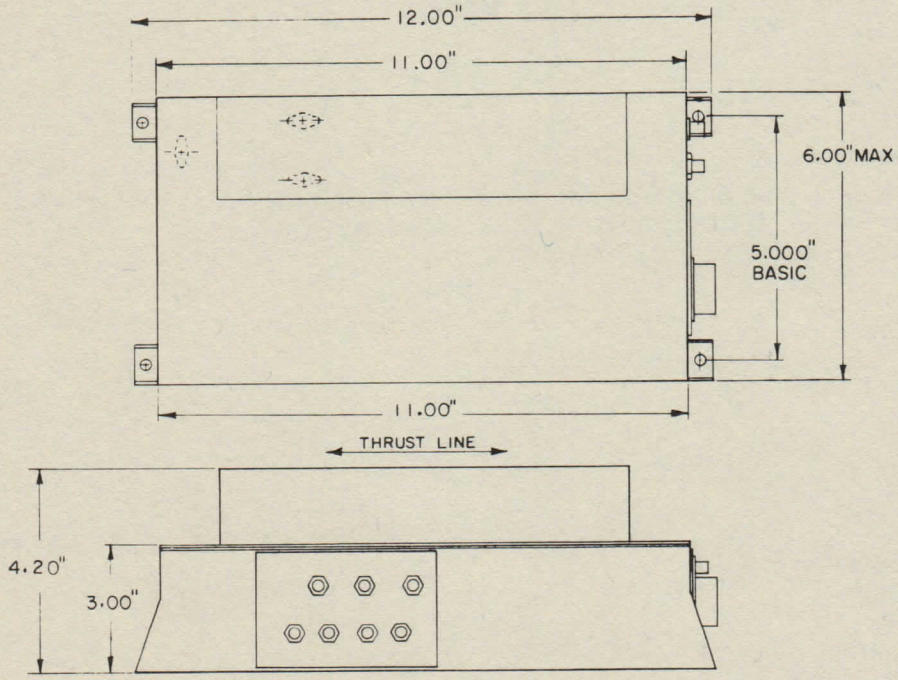

Specifications subject to change without notice.

YOUR LOCAL REPRESENTATIVE

HUGHES
HUGHES AIRCRAFT COMPANY

ELECTRON DYNAMICS DIVISION / 3100 W. LOMITA BLVD. TORRANCE, CA. 90509 / TEL (213) 534-2121

Printed in U.S.A.—11—71

HUGHES

HUGHES AIRCRAFT COMPANY

ELECTRON DYNAMICS DIVISION

1200H

500 mW 7.0-8.0 GHz CW TWTA

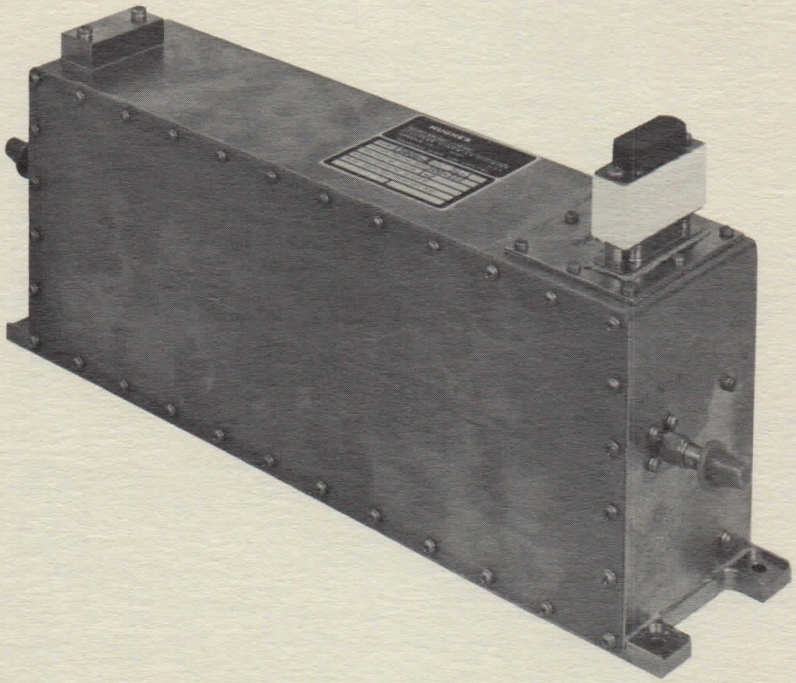

DESCRIPTION

The Hughes Model 1200H, which utilizes the Hughes Model 263H TWT, is a long life, highly reliable space qualified TWTA. This amplifier is used on military communication satellites as a driver for the Hughes model 1202H TWTA.

SPECIFICATIONS

Frequency	7.0–8.0 GHz
Power Output	500 mW
Duty	CW
Gain (saturation)	30 dB
Input Voltage	23–33 Vdc
Input Power	6.4 W max.
Telemetry Outputs (0–5 Vdc)	
• Helix current • Heater Voltage • Cathode to Helix Voltage • Input Current • Cathode Current	
Cooling	Conduction
Focusing	PPM
Weight	4.5 pounds
Size	10 x 4 x 3 inches
Connectors	
RF	3 MM
DC (power input)	DAMA–15P–NMB–2
(test)	DEMA–9P–NMB–2
Expected Life	> 100,000 hours

1200H

500 mW 7.0-8.0 GHz CW TWTA

HUGHES

HUGHES AIRCRAFT COMPANY

ELECTRON DYNAMICS DIVISION

PERFORMANCE CURVE

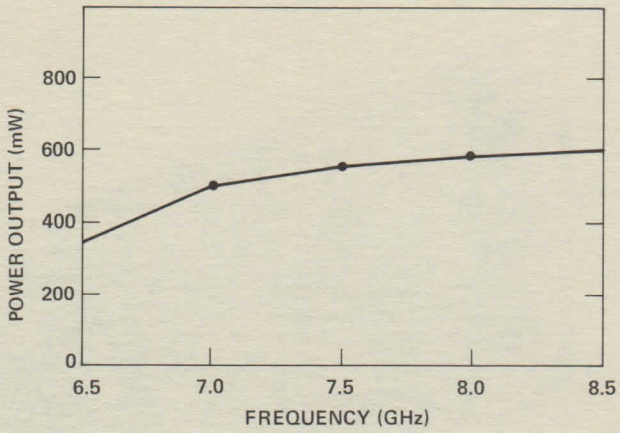

OUTLINE AND MOUNTING DRAWING

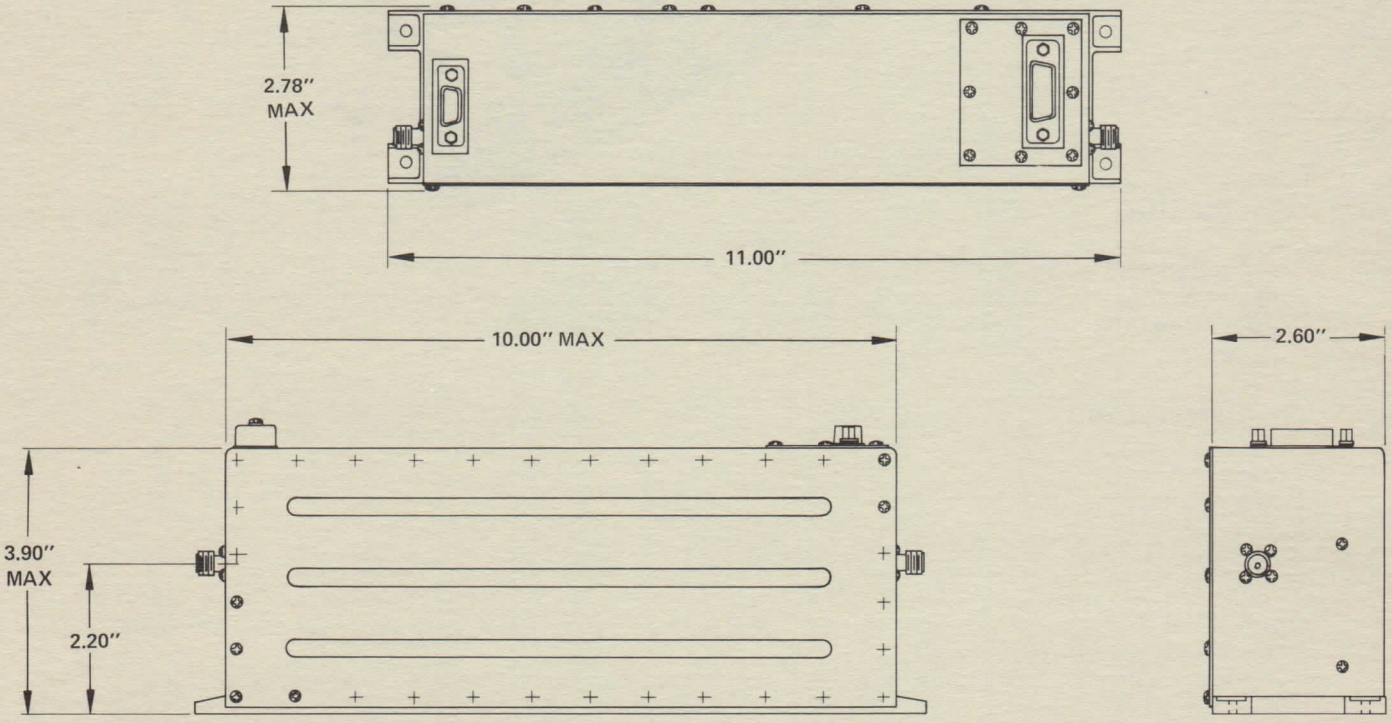

YOUR LOCAL REPRESENTATIVE

HUGHES
HUGHES AIRCRAFT COMPANY
ELECTRON DYNAMICS DIVISION / 3100 W. LOMITA BLVD. TORRANCE, CA.90509/TEL (213) 534-2121

Printed in U.S.A. —7—72

HUGHES

HUGHES AIRCRAFT COMPANY

ELECTRON DYNAMICS DIVISION

1202H

22 W 7-9 GHz CW TWTA

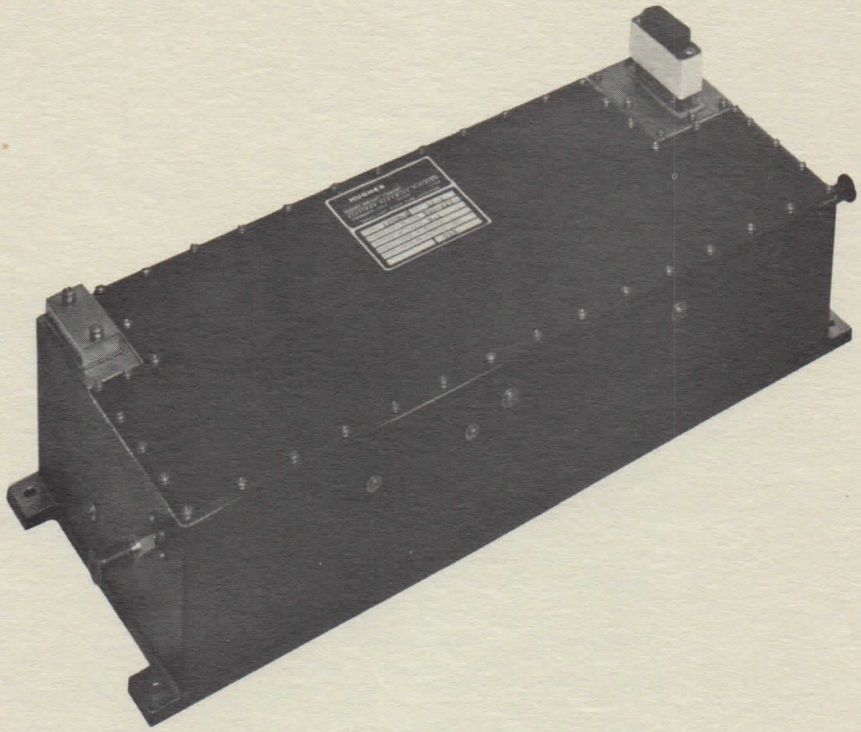

DESCRIPTION

The Hughes Model 1202H is a long life highly reliable space qualified TWTA developed for a military communication satellite utilizing the Hughes Model 265H TWT.

SPECIFICATIONS

Frequency	7–9 GHz
Power Output	22 W
Duty	CW
Gain (saturation)	46 dB
Input Voltage	23–33 Vdc
Input Power (at laboratory ambient)	98 W max.
Telemetry Outputs (0–5 Vdc)	
• Helix Current • Heater Voltage • Cathode to Helix Voltage • Input Current • Cathode Current	
Cooling	Conduction
Focusing	PPM
Weight	9.5 pounds
Size	12 x 5 x 3 inches
Connectors	
RF	3 MM
DC (power input)	DAMA-15P-NMB-2
(test)	DEMA-9P-NMB-2
Expected Life	> 100,000 hours

1202H

22 W 7-9 GHz CW TWTA

HUGHES

HUGHES AIRCRAFT COMPANY

ELECTRON DYNAMICS DIVISION

PERFORMANCE CURVE

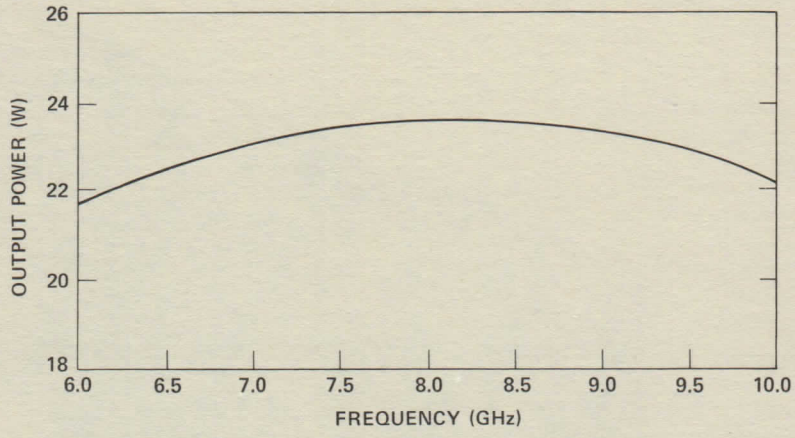

OUTLINE AND MOUNTING DRAWING

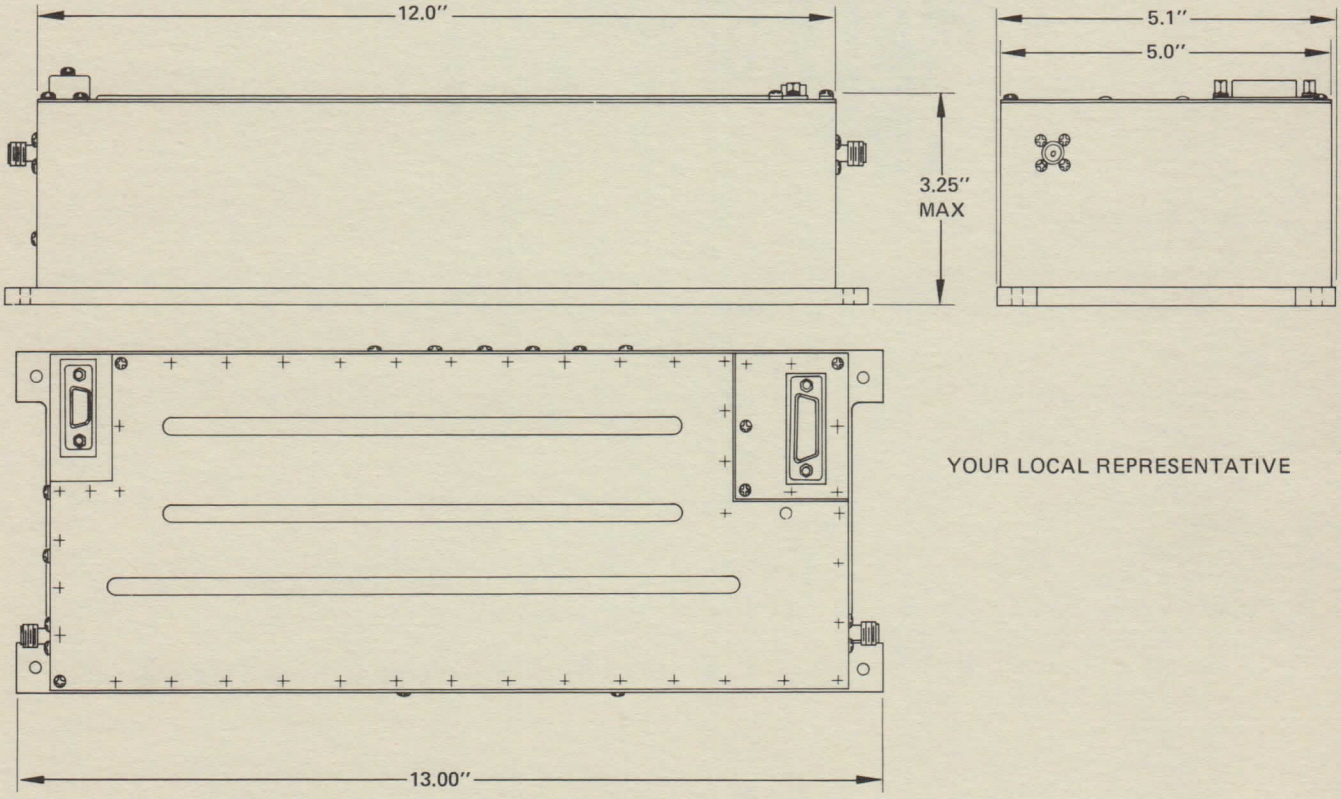

YOUR LOCAL REPRESENTATIVE

HUGHES
HUGHES AIRCRAFT COMPANY

ELECTRON DYNAMICS DIVISION / 3100 W. LOMITA BLVD. TORRANCE, CA.90509/TEL (213) 534-2121

Printed in U.S.A. –7–72

HUGHES

ELECTRON DYNAMICS DIVISION

1216H

10W 3.0-3.5 GHz RF Generator

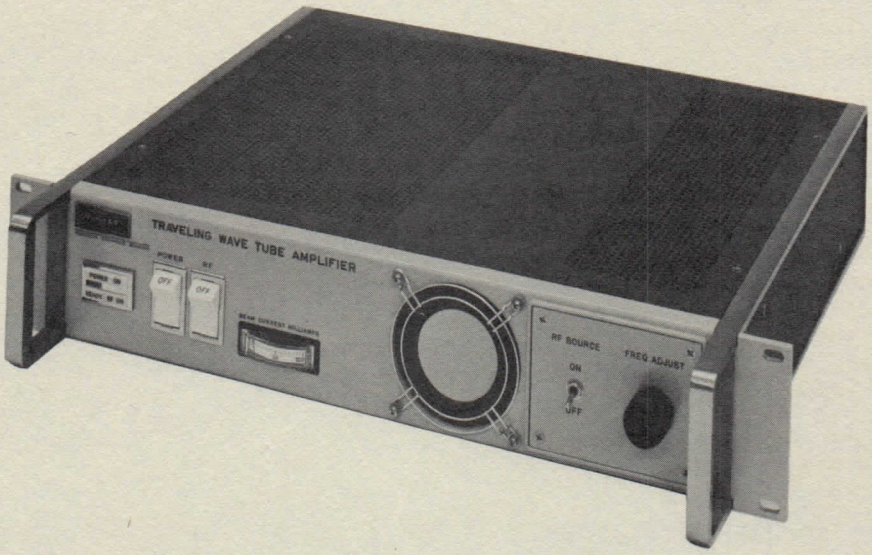

DESCRIPTION

The Hughes Model 1216H RF generator is tunable across the frequency range at 3.0 to 3.5 GHz with a minimum of 10 watts of RF power output. Each generator consists of a PPM metal-ceramic traveling-wave tube, a regulated solid-state power supply and complete air cooling system assembled in a compact instrument case. It was designed for use in automatic test equipment and has other applications in the microwave laboratory where 10 watts of RF power is required.

SPECIFICATIONS

ELECTRICAL

Frequency	3.0 to 3.5 GHz
Power Output	10 watts CW minimum
Duty	CW
Frequency Stability	±0.01%/2 hours
Power Stability	±0.5 dB/24 hours
Residual FM	100 KHz maximum in a 1 MHz bandwidth from carrier
Input Voltage	115V ± 10%
Input Frequency	50/60 Hz
Power Consumption	350 W
Noise Figure	35 dB maximum
Spurious Modulation	-35 dB minimum
VSWR (output)	3:1 maximum

MECHANICAL

Length	15.5 inches
Width	16.75 inches
Height	3.5 inches
Weight	25 pounds maximum
Rear Output Connector	type N
Mounting	bench or 19 inch rack

1216H

10W 3.0-3.5 GHz RF Generator

HUGHES

ELECTRON DYNAMICS DIVISION

SPECIFICATIONS (Cont'd)

ENVIRONMENTAL

Operating Temperature . . . . . 50°F to 100°F

WARRANTY

One full year regardless of the hours of operation

PROTECTIVE FEATURES

Automatic time delay
Helix current overload
Thermal overload
RF output connector interlock

OUTLINE AND MOUNTING DRAWING

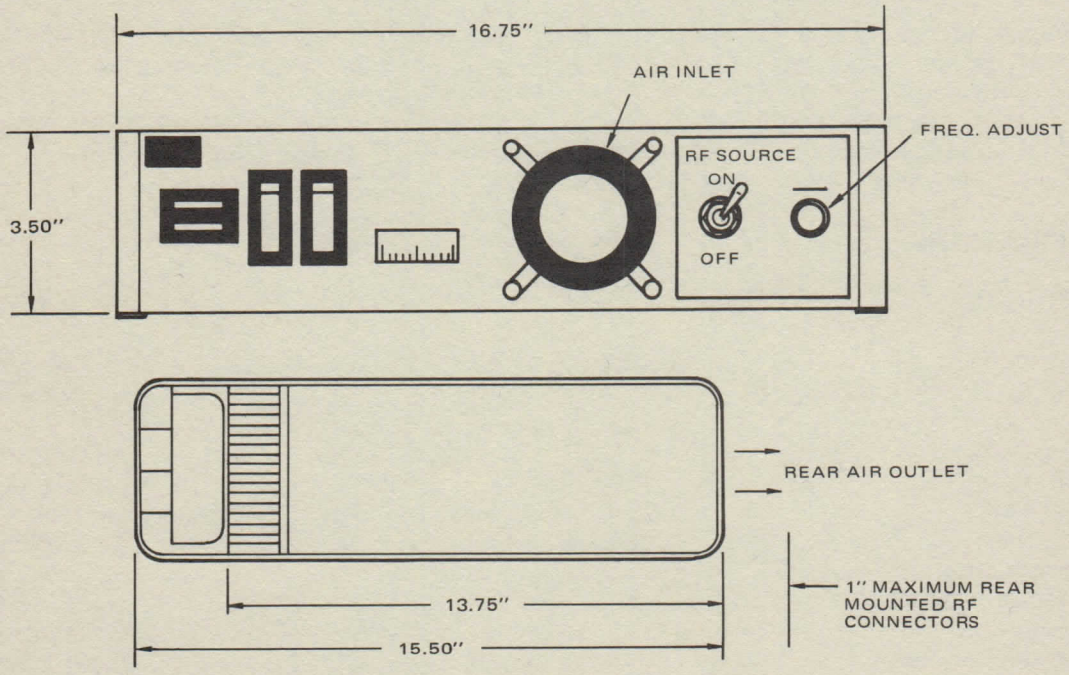

YOUR LOCAL REPRESENTATIVE

HUGHES
HUGHES AIRCRAFT COMPANY
ELECTRON DYNAMICS DIVISION / 3100 W. LOMITA BLVD. TORRANCE, CA. 90509/TEL (213) 534-2121

LITHO IN U.S.A. – 12-72

HUGHES

HUGHES AIRCRAFT COMPANY

ELECTRON DYNAMICS DIVISION

1220H

20 W 13.5-14.5 GHz CW TWTA

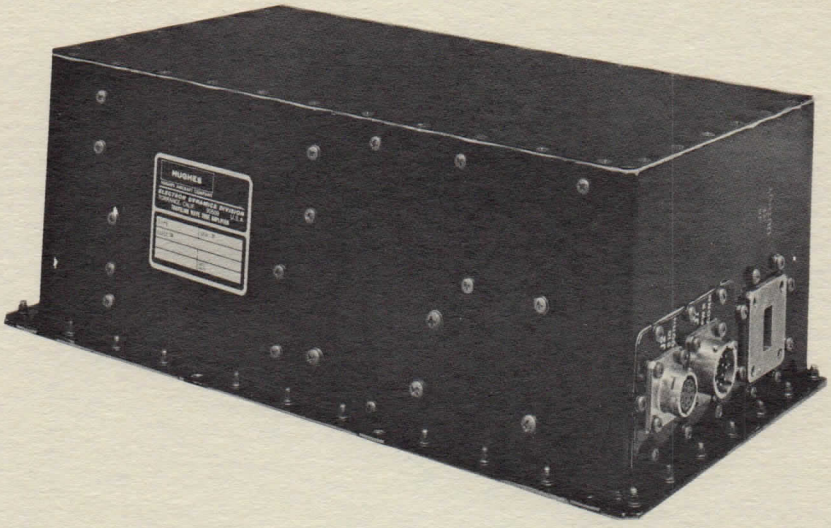

DESCRIPTION

The Hughes model 1220H is a space-qualified traveling-wave tube amplifier developed for the Skylab program. This amplifier will be used in the passive microwave and radar system to study the earth from space. It will be operated in a pulsed application and utilizes the Hughes model 851H traveling-wave tube.

SPECIFICATIONS

Frequency	13.5–14.0 GHz
Power Output	20 W
Duty	CW
Gain (saturation)	53 dB
Input Voltage	28 V +2/-4
Input Power (at laboratory ambient)	140 W
Cooling	conduction
Weight	10.0 pounds
Size	11.8 x 6.6 x 4.4 inches
Connectors	
RF	UG1665/U mates with UG419/U
DC (power input)	JTN02RE-12-9 Bendix
DC (test)	JTN02RE-10-35S Bendix
Telemetry Outputs (0-5 V)	
Helix Current	
Helix Voltage	
Helix Temperature	
Heater Voltage	
Collector Current	

1220H

20 W 13.5-14.5 GHz CW TWTA

HUGHES

HUGHES AIRCRAFT COMPANY

ELECTRON DYNAMICS DIVISION

PERFORMANCE CURVE

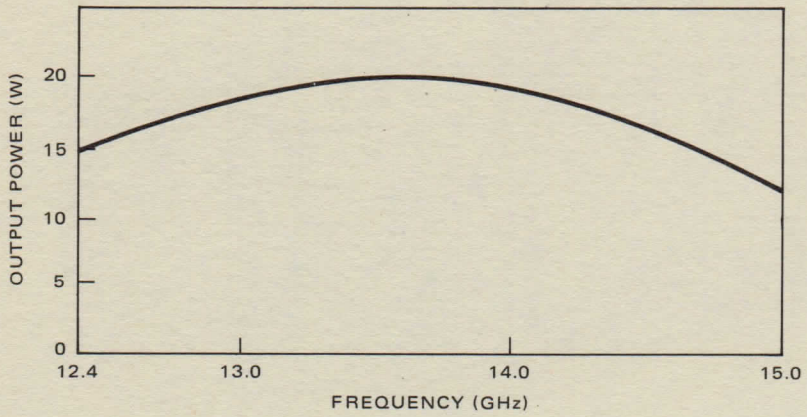

OUTLINE AND MOUNTING DRAWING

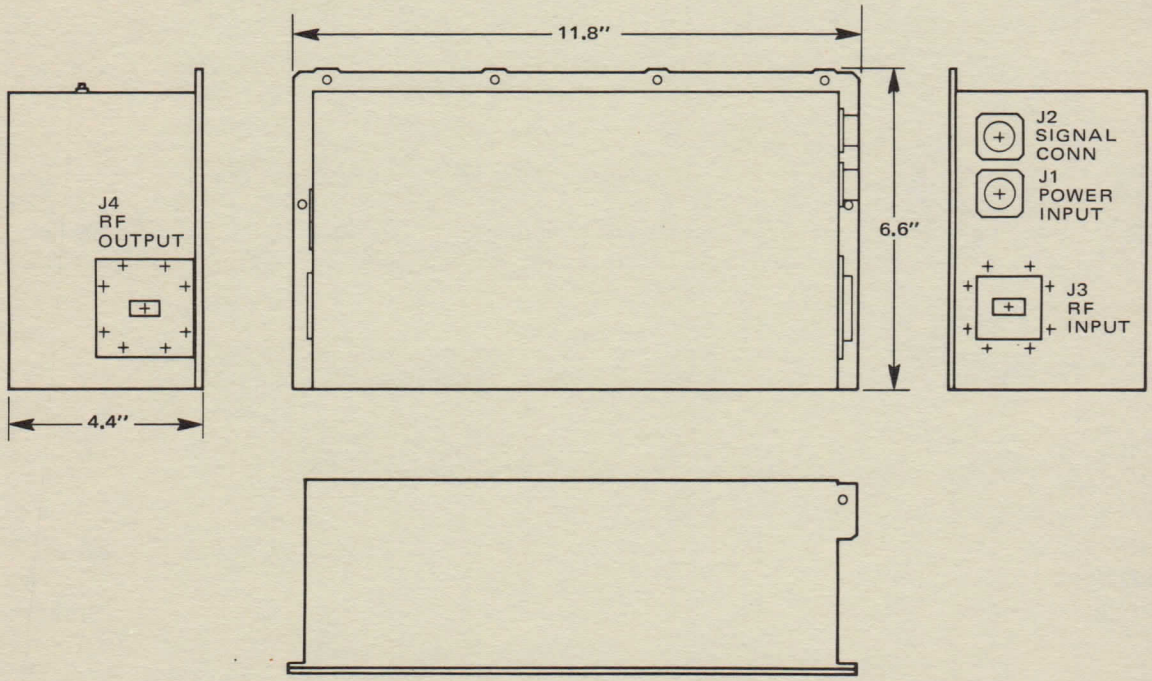

YOUR LOCAL REPRESENTATIVE

HUGHES
HUGHES AIRCRAFT COMPANY

ELECTRON DYNAMICS DIVISION / 3100 W. LOMITA BLVD. TORRANCE, CA. 90509/TEL (213) 534-2121

Printed in U.S.A.–3-73

HUGHES

HUGHES AIRCRAFT COMPANY

ELECTRON DYNAMICS DIVISION

1224H

200 mW 4.1-4.2 GHz CW TWTA

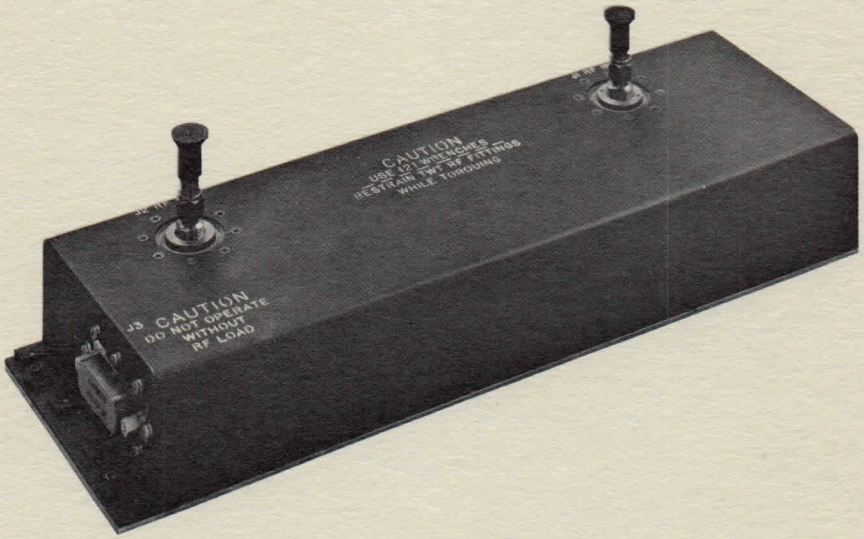

DESCRIPTION

The Hughes Model 1224H is a lightweight, high efficiency, long life space qualified traveling-wave tube amplifier. This small compact unit, which will be used as the output amplifier for analog communications, was developed for the propagation experiment onboard the ATS-F spacecraft. The amplifier utilizes the Hughes Model 233HC traveling-wave tube.

SPECIFICATIONS

Frequency	4.1 – 4.2 GHz
Power Output	200 mW
Duty	CW
Gain (saturation)	52 dB
Input Voltage	28 Vdc ±2%
Input Power	2.9 W
Telemetry (0–5 Vdc)	input current
Cooling	conduction
Weight	2.7 pounds
Size	11.0 x 3.5 x 1.7 inches
Connectors	
RF	SMA
DC	DAM-15P-NMB-1-A106
Expected Life	50,000 hours

1224H

200 mW 4.1-4.2 GHz CW TWTA

HUGHES

HUGHES AIRCRAFT COMPANY

ELECTRON DYNAMICS DIVISION

PERFORMANCE CURVE

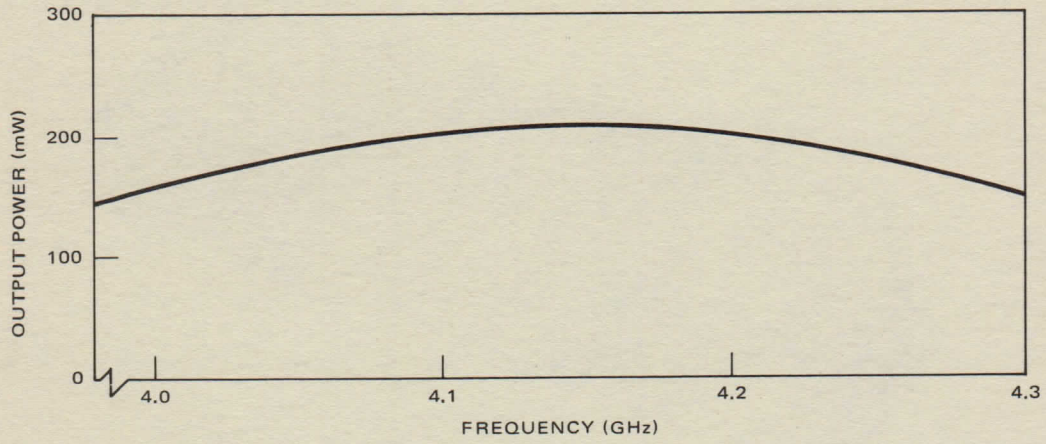

OUTLINE AND MOUNTING DRAWING

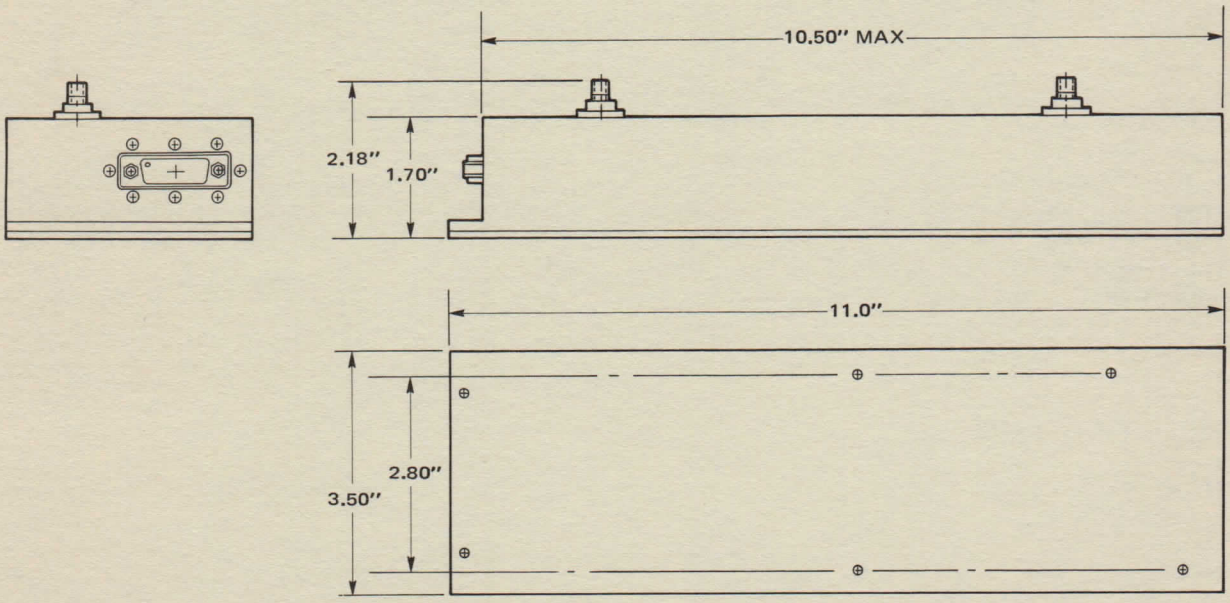

YOUR LOCAL REPRESENTATIVE

HUGHES
HUGHES AIRCRAFT COMPANY
ELECTRON DYNAMICS DIVISION / 3100 W. LOMITA BLVD. TORRANCE, CA. 90509/TEL (213) 534-2121

Printed in U.S.A.–3-73

HUGHES

HUGHES AIRCRAFT COMPANY

ELECTRON DYNAMICS DIVISION

1233H 1234H 1235H 1236H

Logic Controlled TWT Amplifiers

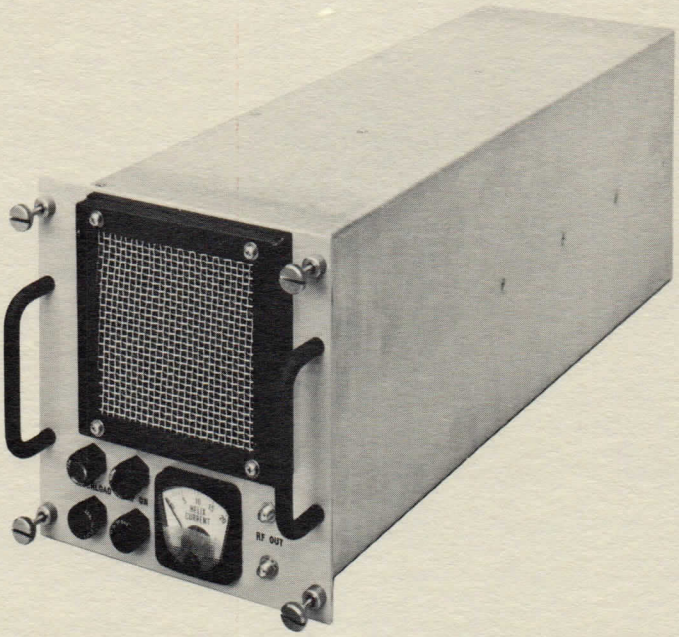

FEATURES

- 4 Models 2-18 GHz
- Programmable Controls
- TTL Compatible
- Ruggedized — Lightweight
- Protective Features
- Full one year warranty — no hour limit

APPLICATIONS

- Communications
- Automatic Test Systems
- Ground Terminals
- Shipboard Systems

DESCRIPTION

The Hughes Models 1233H through 1236H Logic Controlled Traveling-Wave Tube Amplifiers provide specialized performance over the frequency range of 2.0 to 18.0 GHz with power outputs to 20 watts. Designed for a specific shipboard test system, this series offers features and flexibility for a wide variety of automated test and communication applications. All control functions can be remotely programmed and are TTL compatible. Additional logic is provided for remote indication of amplifier status including TWT overload.

This amplifier series is a reconfigured version of the proven 1177H/1277H instrumentation amplifier adapted for 28 Vdc and 115 Vac, 400 Hz operation. Each amplifier consists of a PPM metal-ceramic traveling-wave tube, regulated solid state power supply, complete air cooling system, and logic control/protection circuitry. A high degree of power supply filtering and regulation insures stable low spurious operation. The units carry a full one year warranty with no limit on hours of operation.

A block diagram of the amplifiers is shown in this data sheet. Special variations are available to meet exacting system requirements. Complete information is available upon request.

SPECIFICATIONS

RF PERFORMANCE	1233H	1234H	1235H	1236H
Frequency	2.0 to 4.0 GHz	4.0 to 8.0 GHz	8.0 to 12.4 GHz	12.4 to 18 GHz
Saturated RF Power Output	8.0 W (minimum)	20 W (minimum)	4 W (minimum)	5.0 W (minimum)
Duty	CW	CW	CW	CW
Gain at Rated Power Output	35 dB (minimum)	38 dB (minimum)	33 dB (minimum)	37 dB (minimum)
Noise Power Output (Input Terminated)	3 dBm maximum (average power)	3 dBm maximum (average power)	4 dBm maximum (average power)	5 dBm maximum (average power)
Replacement TWT Model Number	564H	640H	771H	848H

Electrical

Noise Figure . . . . . 35 dB maximum
VSWR . . . . . 3.0:1 maximum
Small Signal Gain Stability . . . . . ±1 dB for ±10% line
Small Signal Gain Variation . . . . . 12 dB maximum
Maximum RF Input Power . . . . . +10 dBm (continuous without TWT damage)
Spurious Modulation . . . . . -60 dB typical
Input Voltage . . . . . 115 Vac (±10%) 400 Hz 3-Phase, 28 Vdc (+1,—3 volts)
Power Consumption . . . . . 330 W maximum

Mechanical

Size/Configuration . . . . . see outline drawing
Weight . . . . . 18.5 pounds
RF Connectors Input/Output . . . . . SMA female
Power Connector MS3124E-14-5P
Control Connector (includes 28 Vdc) MS3124E-14-15P

Environmental

Temperature — Operating . . . . . 0 - 50°C
— Non-Operating . . . . . –45 to +75°C
Altitude — Operating . . . . . 0 - 10,000 feet
— Non-Operating . . . . . 0 - 50,000 feet
Relative Humidity - Operating and Non-Operating . . . . up to 90% without condensation
Vibration — Operating and Non-Operating . . . . . 5 - 15 Hz, 0.06" DA
15 - 25 Hz, 0.04" DA
25 - 55 Hz, 0.02" DA
Shock - Non-Operating . . . . . 15 G's, 11 msec, 1/2 sinewave

WARRANTY

One full year regardless of the hours of operation.

PROTECTIVE FEATURES

Automatic Time Delay
Helix Current Overload
Thermal Overload
Line Surge
Arc Protection

PANEL INDICATOR

Helix Current Meter
Power On
Standby
Overload
RF On

DESCRIPTION OF REMOTE PROGRAMMING FEATURES

The 1233H, 1234H, 1235H and 1236H amplifiers provide TTL compatible inputs/outputs permitting remote programming and monitoring. The incorporated logic circuitry and protection circuitry allows completely automatic operation and operation at unattended sites. Three (3) control lines and four (4) monitor lines and their associated returns are accessible via a rear panel connector. Local controls can be optionally provided at the amplifier or via a small control box.

Each control will be inactive when the associated line is high (+2.5 to 5.0 Vdc) or Logic 1 and active when the line is low (0 to +0.7 Vdc) or Logic 0. The difference between the *POWER ON* state and *STANDBY* state is approximately 3 minutes and determined by the power supply (high voltage) delay timer. The amplifier can be remotely reset from an *OVERLOAD* state (Helix Current) to an *RF ON* state by a reset pulse (Logic 0, ≥1 msec) via the *RESET* control lines.

CONTROL LINES	TWTA STATES				
	OFF	POWER ON	STANDBY	RF ON	RESET
1	1	0	0	0	0
2	1	1	1	0	0
3	1	1	1	1	0≥1 msec

Four (4) monitor outputs associated with the panel indicators *(POWER ON, STANDBY, OVERLOAD,* and *RF ON)* are provided. Logic 0 indicates panel indicator is *ON* and Logic 1 indicates the lamp is de-energized or *OFF*. Indicator lamps and monitor outputs relate directly to the amplifier state.

BLOCK DIAGRAM

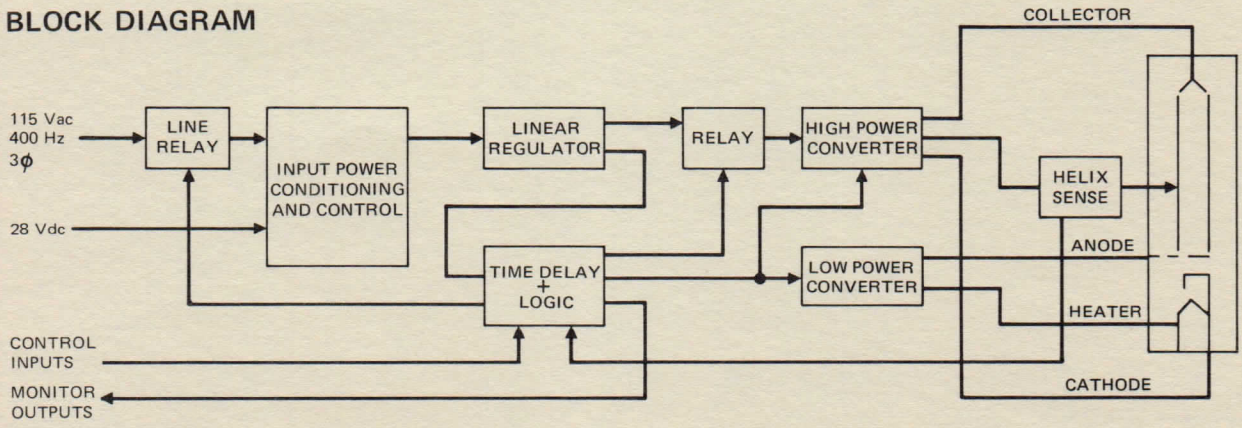

1233H 1234H 1235H 1236H

Logic Controlled TWT Amplifiers

HUGHES

HUGHES AIRCRAFT COMPANY

ELECTRON DYNAMICS DIVISION

OUTLINE AND MOUNTING DRAWING

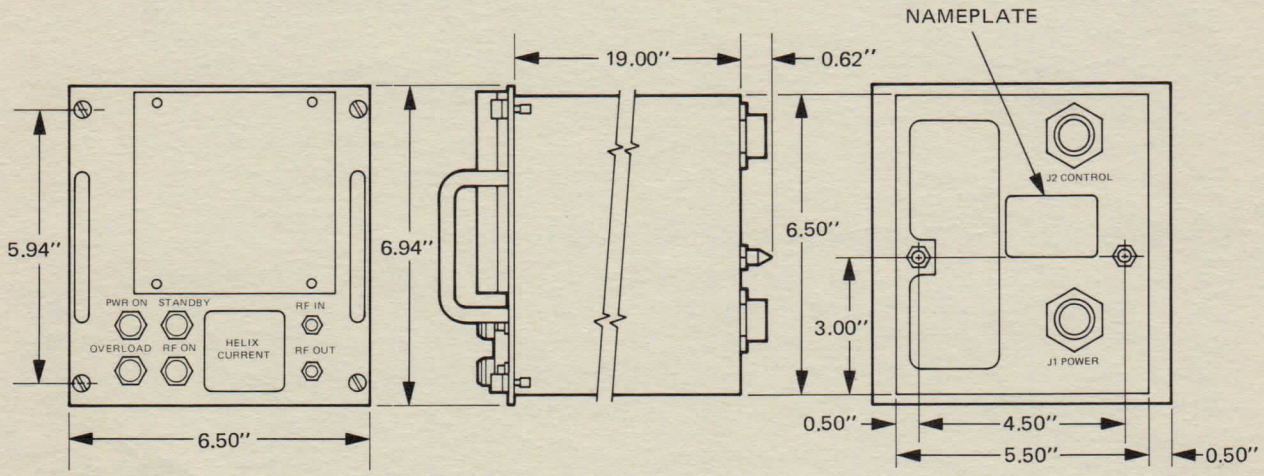

YOUR LOCAL REPRESENTATIVE

HUGHES
HUGHES AIRCRAFT COMPANY

ELECTRON DYNAMICS DIVISION / 3100 W. LOMITA BLVD. TORRANCE, CA. 90509 / TEL (213) 534-2121

Printed in U.S.A. – 8/73

HUGHES

HUGHES AIRCRAFT COMPANY

ELECTRON DYNAMICS DIVISION

1243H

4.5 W, 3.7-4.2 GHz TWTA

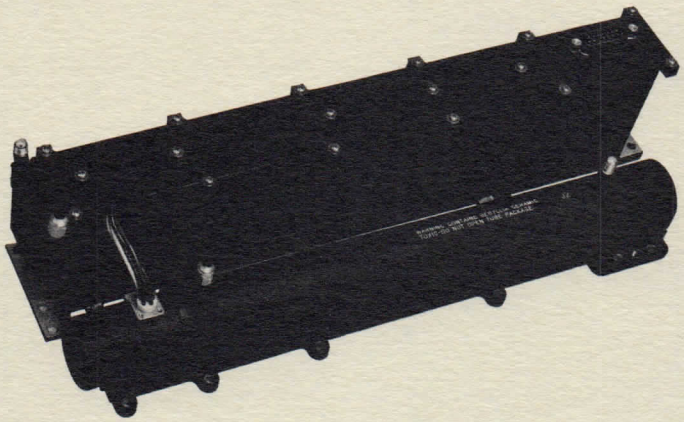

DESCRIPTION

The Hughes Model 1243H traveling-wave tube amplifier is a 4.5 watt C-Band unit designed and built for the intelsat V spacecraft. This high efficiency, long-life TWTA in combination with the environmentally rugged package makes this unit ideally suited for space communications applications. The TWTA utilizes the 244H TWT with an equalizer on the RF input for constant gain;

SPECIFICATIONS*

ELECTRICAL

Frequency	3.7–4.2 GHz
Output Power	4.5 W minimum
Duty	CW
Saturated Gain	56 dB typical
Input Voltage	25.5–42.5 V(dc)
Power Consumption	17.6 W maximum
Noise Figure	30 dB maximum
VSWR (hot input)	2.5:1
(hot output)	2.5:1
Telemetry	helix current, heater on/off

MECHANICAL

Cooling	conduction
Size	13.4" L x 3.95" W x 4.21" H (34.04 cm x 10.03 cm x 10.7 cm)
Weight	3.1 pounds (1.41 kg)
Connectors (RF)	SMA (female)
(DC)	Cannon DAM-15P

ENVIRONMENTAL

Operating Temperature	$-40^{\circ}C$ to $+60^{\circ}C$
Expected Operating Life	10 years

PROTECTIVE FEATURES

- Undervoltage
- Input Overcurrent

*Specifications subject to change without prior notice.

1243H

4.5 W, 3.7-4.2 GHz TWTA

HUGHES

HUGHES AIRCRAFT COMPANY

ELECTRON DYNAMICS DIVISION

TYPICAL PERFORMANCE CURVE

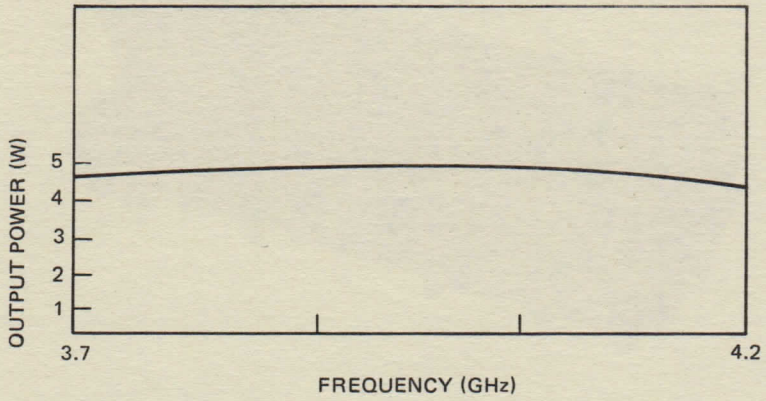

OUTLINE AND MOUNTING DRAWING

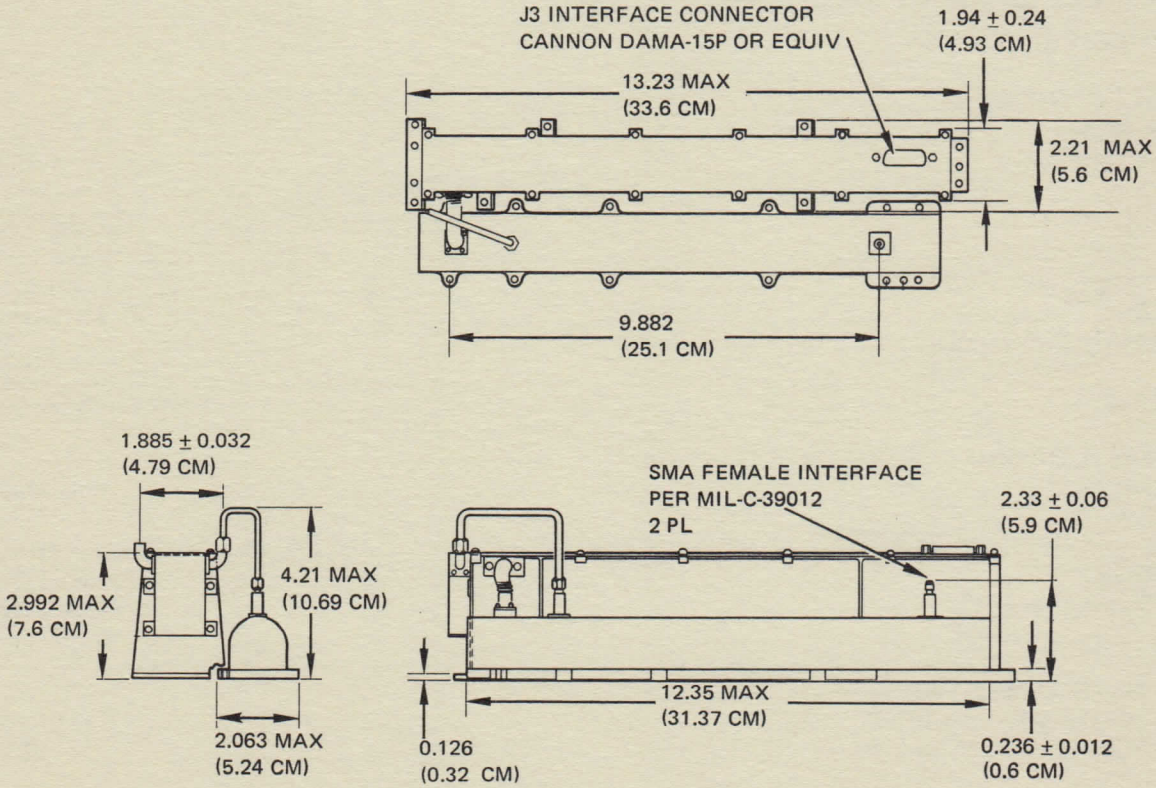

HUGHES
HUGHES AIRCRAFT COMPANY
ELECTRON DYNAMICS DIVISION 3100 West Lomita Boulevard, Torrance, California 90509, Tel (213) 534-2121

Printed in U.S.A. 7-78 AL

HUGHES

HUGHES AIRCRAFT COMPANY

ELECTRON DYNAMICS DIVISION

1244H

8.5 W, 3.7-4.2 GHz TWTA

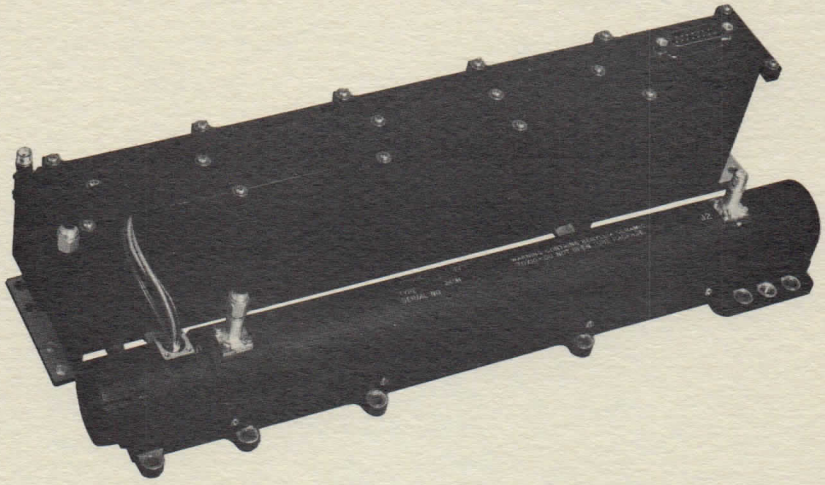

DESCRIPTION

The Hughes Model 1244H traveling-wave tube amplifier is an 8.5 watt, C-Band unit designed and built for the Intelsat V communication satellite. This high efficiency, long-life TWTA in combination with the environmentally rugged package makes the unit ideally suited for space applications. The TWTA utilizes the 249H TWT.

SPECIFICATIONS*

Electrical

Frequency	3.7–4.2 GHz
Output Power	8.5W
Duty	CW
Saturated Gain	55dB
Input Voltage	26.5–42.5V
Power Consumption	29 W maximum
Noise Figure	30dB
VSWR (hot input)	2.5:1
(hot output)	2.5:1
Telemetry	helix current, heater on/off

MECHANICAL

Cooling	conduction
Size	13.4 L x 3.95 W x 4.21H (30.04 cm x 10.03 cm x 10.7 cm)
Weight	3.3 pounds (1.5 kg)
Connectors (RF)	SMA Female
(DC)	Cannon DAM-15P

ENVIRONMENTAL

Operating Temperature	-40°C to +60°C
Expected Operating Life	10 years

PROTECTIVE FEATURES

- Undervoltage
- Input Overcurrent

*Specifications subject to change without prior notice.

1244H

8.5 W, 3.7-4.2 GHz TWTA

HUGHES

HUGHES AIRCRAFT COMPANY

ELECTRON DYNAMICS DIVISION

TYPICAL PERFORMANCE CURVE

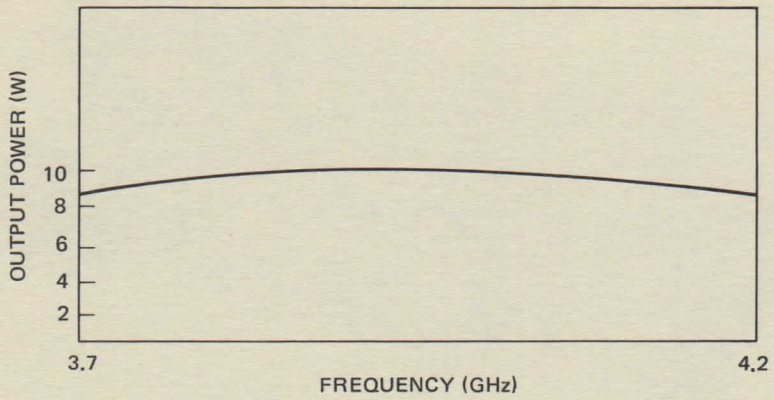

OUTLINE AND MOUNTING DRAWING

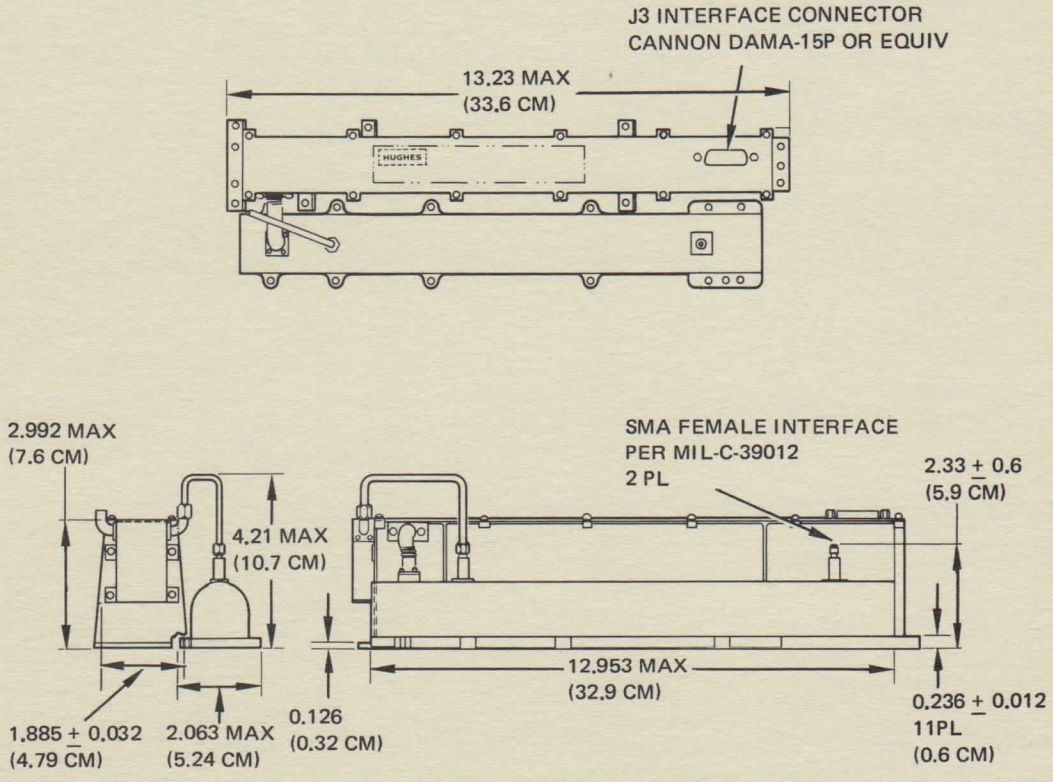

Your Local Representative

HUGHES

HUGHES AIRCRAFT COMPANY

ELECTRON DYNAMICS DIVISION 3100 West Lomita Boulevard, Torrance, California 90509, Tel (213) 534-2121

AL PRINTED IN USA AUG 78

HUGHES

HUGHES AIRCRAFT COMPANY

ELECTRON DYNAMICS DIVISION

1247H

20W CW TWTA

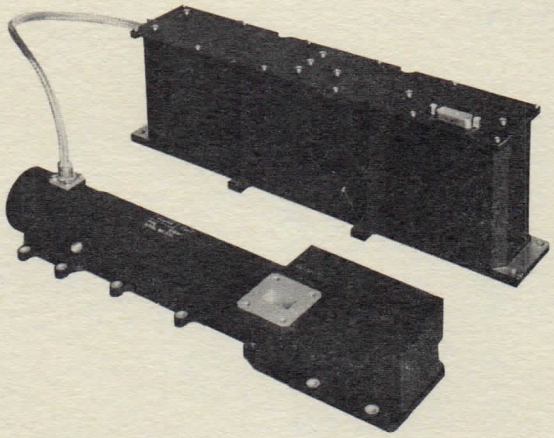

DESCRIPTION

The Hughes Model 1247H is a 20 watt Ku-Band traveling-wave tube amplifier. This long-life, high reliability, space qualified unit is designed for telemetry and communication applications. The TWTA utilizes either the Hughes Model 286HP or 286HM traveling-wave tube.

SPECIFICATIONS*

ELECTRICAL

Frequency	286HP 11.7-12.2 GHz
	286HM 14.5-15.5 GHz
Power Output	20 W minimum
Bandwidth	500 MHz
Duty	CW
Saturated Gain	60 dB
Efficiency	30% minimum
AM/PM Conversion	$<5.0^{o}$/dB
Noise Figure	32 dB
Telemetry	helix current
Input Voltage	21 – 35 Vdc
Design Life	10 years

MECHANICAL

Cooling		conduction
Size	TWT	12.75" L x 2.5" W x 2.15" H (32.4 cm x 6.4 cm x 5.5 cm)
	EPC	12.75" L x 2.5" W x 4.0" H (32.4 cm x 6.4 cm x 10.2 cm)
Weight		7.5 pounds (3.4 kg)
Connectors	(RF input)	SMA
	(RF output)	286HP (WR 75), 286HM (WR 62 waveguide
	(DC)	DAMA 15P

PROTECTIVE FEATURES

- Overvoltage
- DC Input Power

*Specifications subject to change without prior notice.

1247H

20W CW TWTA

HUGHES

HUGHES AIRCRAFT COMPANY

ELECTRON DYNAMICS DIVISION

OUTLINE AND MOUNTING DRAWING

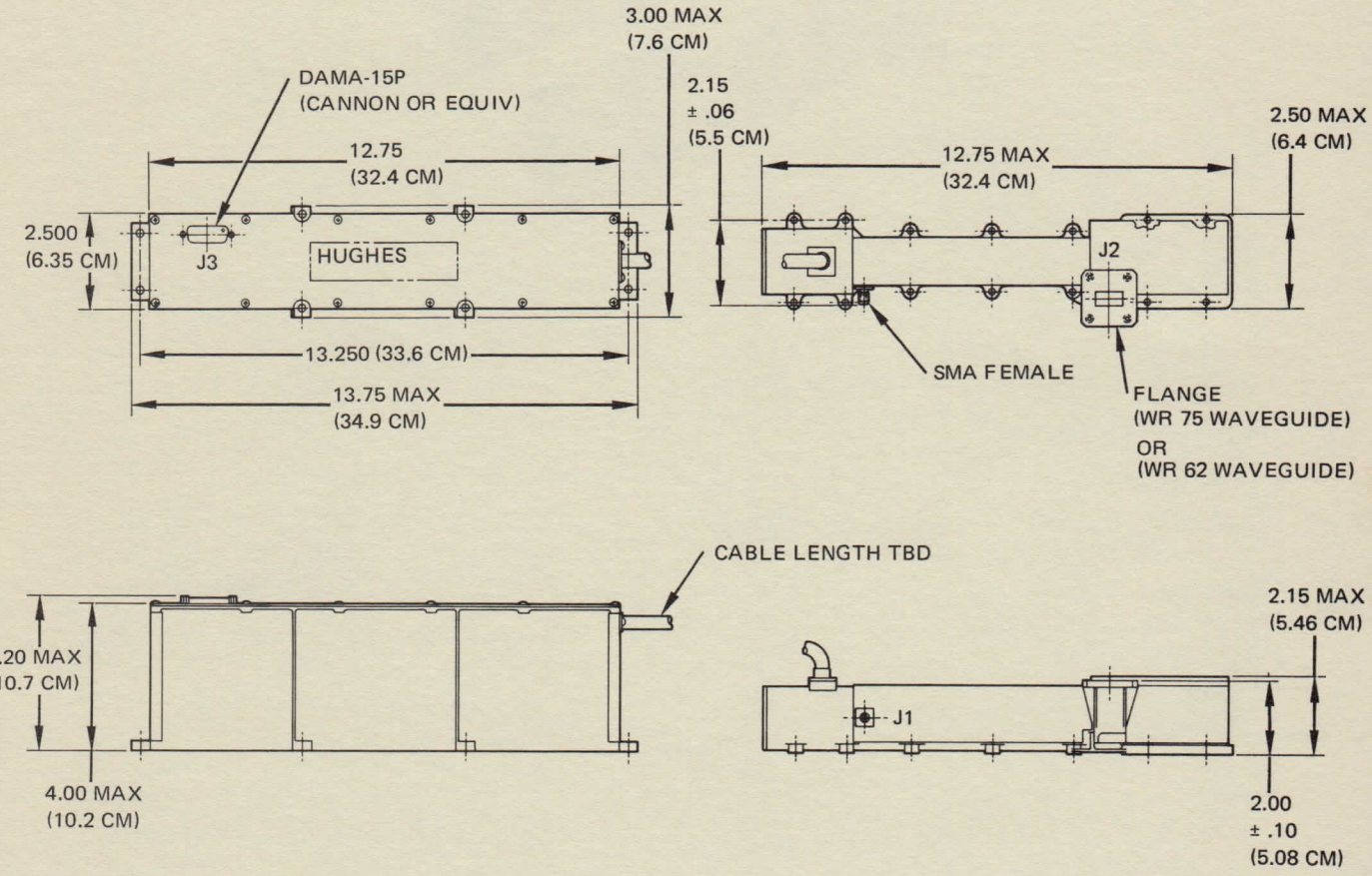

HUGHES ELECTRON DYNAMICS DIVISION 3100 West Lomita Boulevard, Torrance, California 90509, Tel (213) 534-2121

HUGHES AIRCRAFT COMPANY

HUGHES

HUGHES AIRCRAFT COMPANY

ELECTRON DYNAMICS DIVISION

1277H

Instrumentation TWT Amplifiers

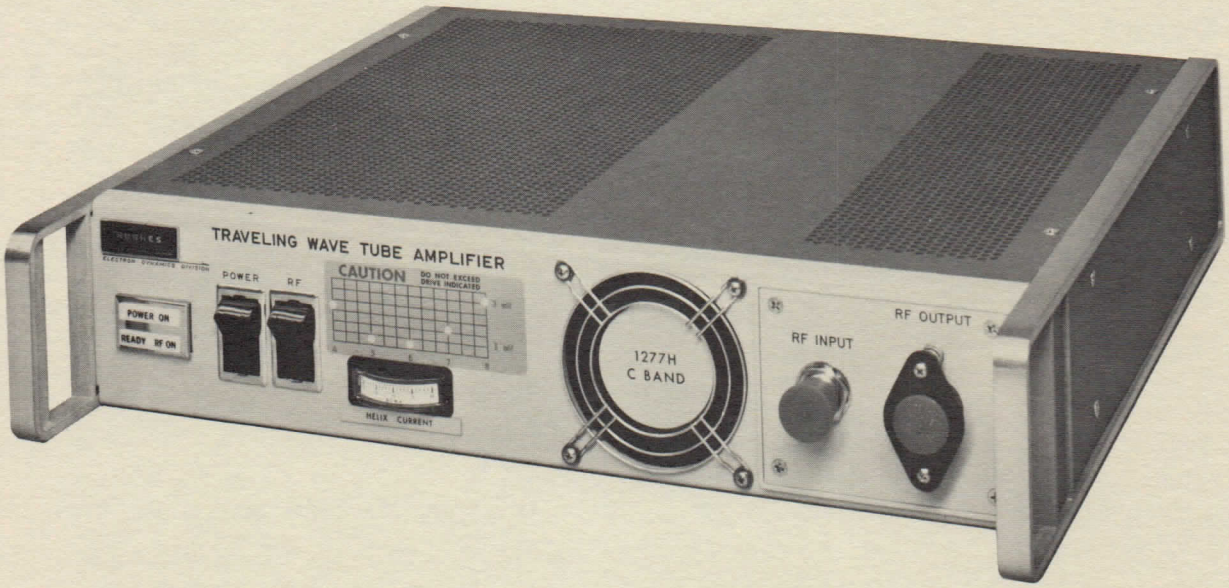

FEATURES

- 5 Models 1–18 GHz
- 20 Watts Minimum
- Protective Features
- Lightweight – Compact
- Full One Year Warranty – No Hour Limit

APPLICATIONS

- RFI/EMI Testing
- Communications
- Antenna Testing
- Component Testing
- Laboratory Instrumentation
- System Testing

DESCRIPTION

The five models in the 1277H Traveling-Wave Tube Amplifier Series cover a 1 to 18 GHz frequency range with a minimum power output of 20 watts CW. Each amplifier consists of a PPM metal-ceramic traveling-wave tube, a regulated solid state power supply and complete air cooling system assembled within a compact instrument case.

The 1277H Series utilizes any of five traveling-wave tubes which have originated from our space tube family.

The knowledge gained in developing "space" tubes allows us to warrant the complete amplifier package for a full year, regardless of the hours of use.

The 1277H's light-weight compactness makes it ideal for either bench or 19 inch rack mounting. This size-weight feature is the result of the unique circuit design.

The 1277H has a wide variety of uses in such applications as EMI testing, antenna testing, communications, component testing, system testing and general laboratory requirements.

SPECIFICATIONS *

1277H

RF Performance

Model	Frequency	Power Output
1277H09	1.0 – 2.0 GHz	20 watts
1277H01	2.0 – 4.0 GHz	20 watts
1277H02[3]	4.0 – 8.0 GHz	20 watts
1277H03	8.0 – 12.4 GHz	20 watts
1277H04	12.4 – 18.0 GHz	20 watts

Electrical

Gain at Rated Power Output (20 W) . . . . . 30 dB minimum
Duty . . . . . CW
Input Voltage . . . . . 120 Vac ± 10%
Power Consumption . . . . . 300 W[3]
Noise Figure . . . . . 35 dB maximum
Spurious Modulation (at saturation) . . . . . -50 dB minimum
VSWR . . . . . 3:1 maximum

Mechanical

Size/Configuration . . . . . See back cover
Weight . . . . . 20 pounds maximum[1]
Connectors . . . . . N type female
1277H04 uses a WR-62 waveguide output with UG-419/U flange and SMA input connector.
1277H04 does not have an RF interlock. Waveguide output is available at rear panel.

Environmental

Operating Temperature . . . . . 0-50°C ambient[2]

Warranty

One full year regardless of the hours of operation.

Protective Features

Automatic time delay
Helix current overload
Thermal overload at TWT collector
RF output connector interlock

To Order Specify

1277H	01	F –	OOO	Replacement Tubes
Series Number	**01** – 2.0 to 4.0 GHz	**F** – Front Panel Connector	**OOO** – Standard Unit	568H
	02 – 4.0 to 8.0 GHz	**R**[4] – Rear Panel Connector	**XXX** – Factory Assigned	640H
	03 – 8.0 to 12.4 GHz			783H
	04 – 12.4 to 18.0 GHz			856H
	09 – 1.0 to 2.0 GHz		Special	418H

Options: See Option List

*Specifications subject to change without prior notice.

1. 25 pounds maximum for Model 1277H09.
2. 40°C maximum for 1277H04.
3. Power consumption 350 W for 1277H02
4. Except for Model 1277H09

POWER OUT AND GAIN AT RATED OUTPUT VERSUS FREQUENCY

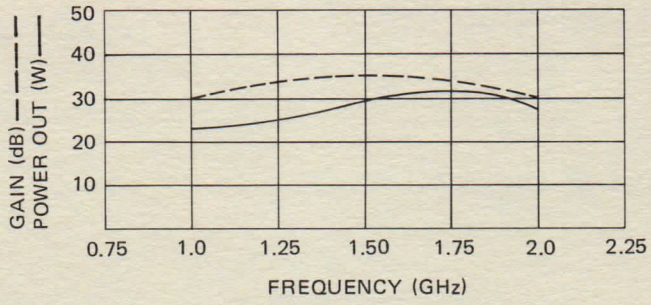

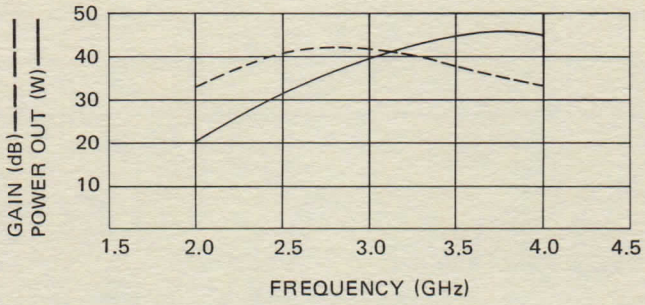

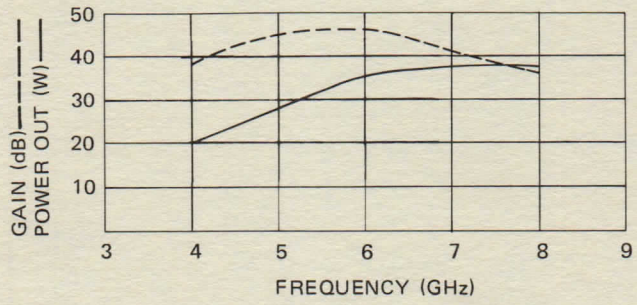

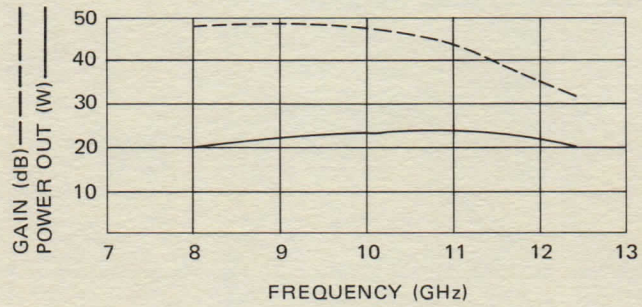

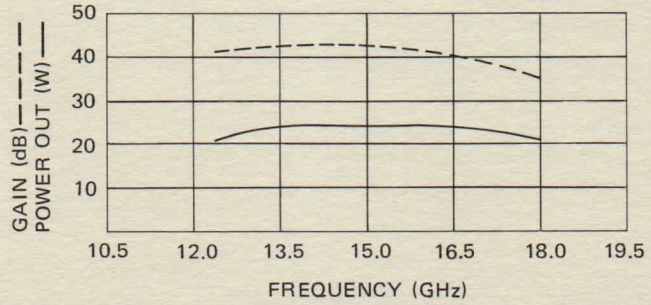

1277H

Instrumentation TWT Amplifiers

HUGHES

HUGHES AIRCRAFT COMPANY

ELECTRON DYNAMICS DIVISION

OUTLINE AND MOUNTING DRAWING

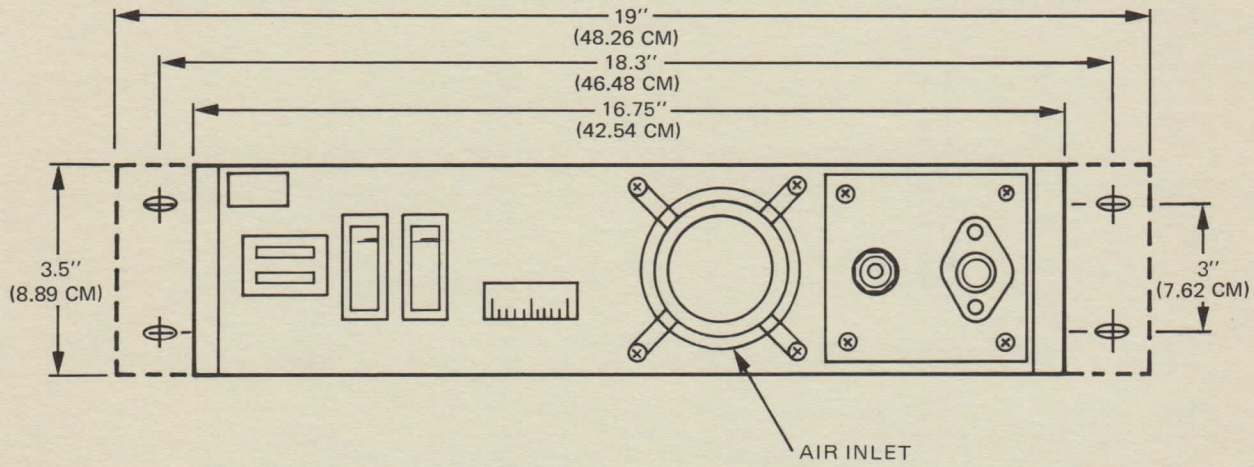

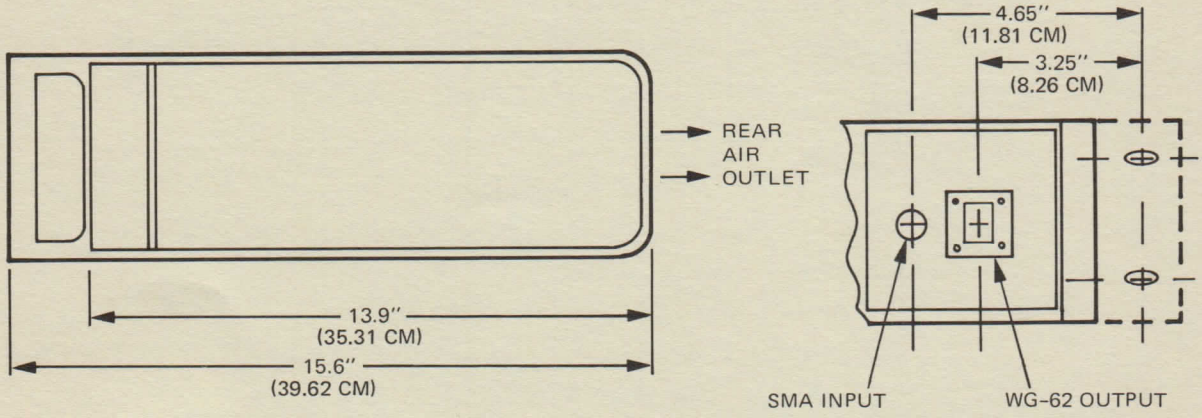

1277H04 CONNECTOR CONFIGURATION

Note: L-band units have a modified rear panel for tube protection. Complete details available upon request.

YOUR LOCAL REPRESENTATIVE

HUGHES
HUGHES AIRCRAFT COMPANY

INSTRUMENTATION AMPLIFIER PRODUCTS
ELECTRON DYNAMICS DIVISION 3100 West Lomita Boulevard, Torrance, California 90509, Tel (213) 534-2121

Printed in U.S.A. 8/79 AL

OPTION LIST
1177H AND 1277H SERIES
TWT AMPLIFIERS

EFFECTIVE MAY 1973

HUGHES

HUGHES AIRCRAFT COMPANY

ELECTRON DYNAMICS DIVISION

OPTION A — **220/240 V INPUT** — **$150.00**

This option allows operation from either 220 Vac ± 10% or 240 Vac ± 10% (specify which) at 50/60 hertz. Unit weight increases by approximately 10 pounds. All other specifications remain the same. Option A precludes 120 Vac operation.

OPTION B — **DC HEATER SUPPLY** — **$75.00**

Reduces spurious coherent harmonics caused by the ac heater and provides cleaner spectrum. (AC heater harmonics are at 10 kHz intervals.)

OPTION C — **HELIX VOLTAGE REGULATOR** — **$200.00**

This option improves the short and long term gain stability and reduces the gain variations due to environmental effects (temperature, etc.). Spurious harmonics at 60 Hz are also reduced.

OPTION D — **REMOTE UNATTENDED OPERATION** — **$100.00**

This option allows remote unattended operation by turning off all power in the event of a helix overload. This prevents tube damage since helix overload normally returns the unit to STANDBY, and operation in STANDBY for more than 15 minutes may damage the TWT.

OPTION E — **RACKMOUNTING** — **No Charge**

Standard rackmounting hardware is available on request.

All prices and specifications are subject to change without notice.
All prices are F.O.B. Torrance, California. Options must be requested at the time of instrument order.

HUGHES
HUGHES AIRCRAFT COMPANY
ELECTRON DYNAMICS DIVISION / 3100 W. LOMITA BLVD. TORRANCE, CA. 90509 / TEL (213) 534-2121

HUGHES

HUGHES AIRCRAFT COMPANY

ELECTRON DYNAMICS DIVISION

COMMERCIAL TWTS

FEATURES

Covering 1 Watt in K-band
10 and 20 Watts in L-, S-, C-, X-, and Ku-bands

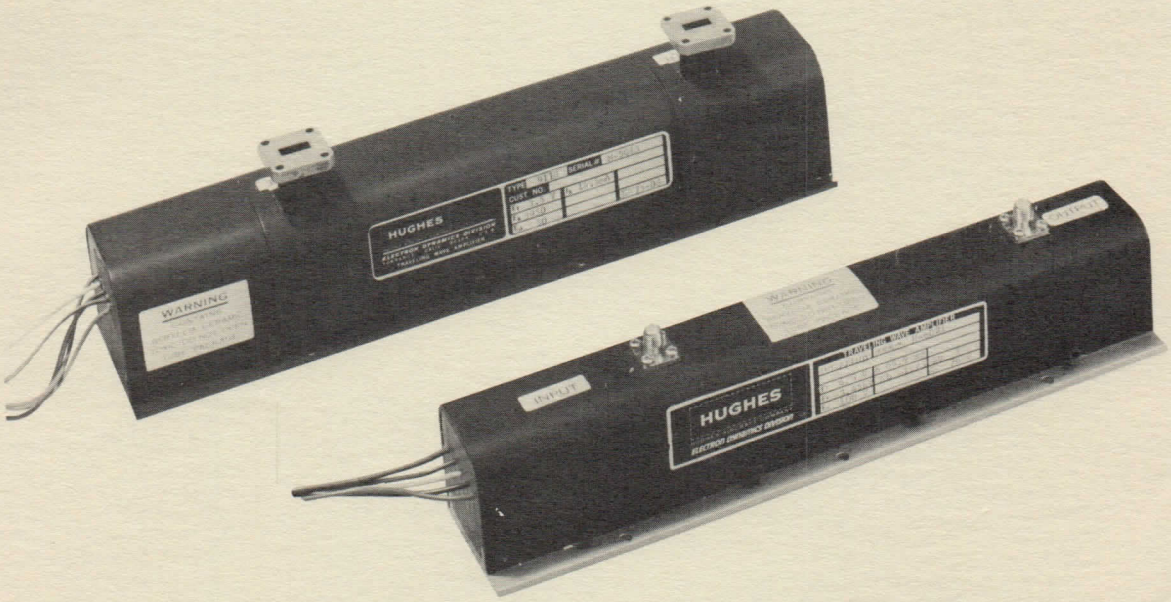

DESCRIPTION

The Hughes Commercial Traveling-wave Tubes (TWTs) in this series have a wide variety of applications for laboratory testing and systems requirements. Their construction is based on knowledge gained in the design and manufacture of the Hughes space TWTs which have won world-wide recognition for their proven quality and reliability. Millions of hours of operation in space have been logged by these tubes aboard the Surveyor, Mariner, Early Bird, Pioneer, ATS, Syncom, TACSAT, Intelsat and Apollo spacecrafts. The same facilities, technical know-how and craftsmanship is utilized in producing these commercial TWTs. This, combined with proven reliability, allows us to warrant these TWTs for one year, regardless of the hours of operation.

SPECIFICATIONS①

ELECTRICAL

Gain (at rated power out)	30 dB minimum
Duty	CW
Noise Figure	30 dB typical, 35 dB maximum
VSWR	2.5:1 maximum

MECHANICAL

Construction	metal ceramic
Cooling	conduction
Focusing	PPM
Weight	3 pounds (1.4 kilograms) maximum②
Connectors (input & output)	SMA③

ENVIRONMENTAL

Temperature (baseplate)	85°C maximum④
Altitude (non-operating)	50,000 feet (15,250 meters) maximum

The TWT is rugged in design and, in general, will meet the requirements of MIL-E-5400. Contact Hughes Electron Dynamics Division for specific details.

WARRANTY

One year – no hour limit.

① Specifications subject to change without notice.

② Model 417HD and 418HD TWT is 7 pounds (3.2 kg) maximum.

③ Model number 856H TWT uses WR-62 waveguide on the output only. Model 911H TWT uses WR-42 waveguide on both the input and output.

④ 911H maximum base plate temperature not to exceed 50°C.

1 WATT SERIES

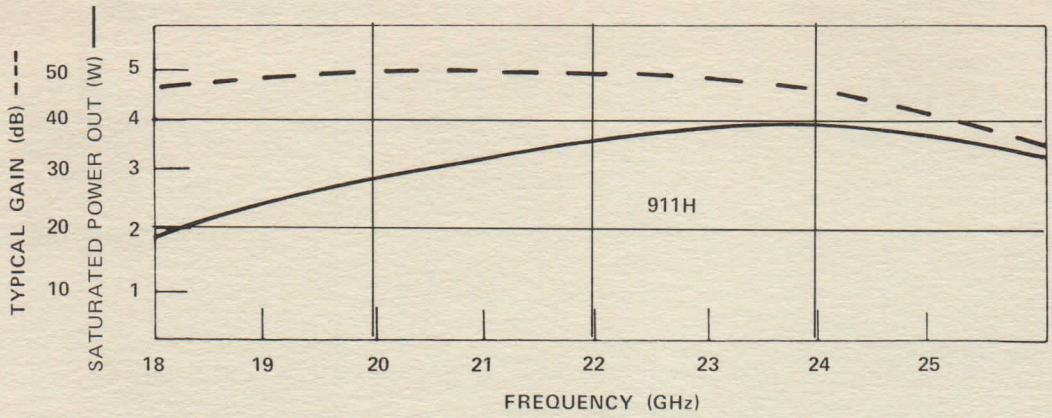

10 WATT SERIES

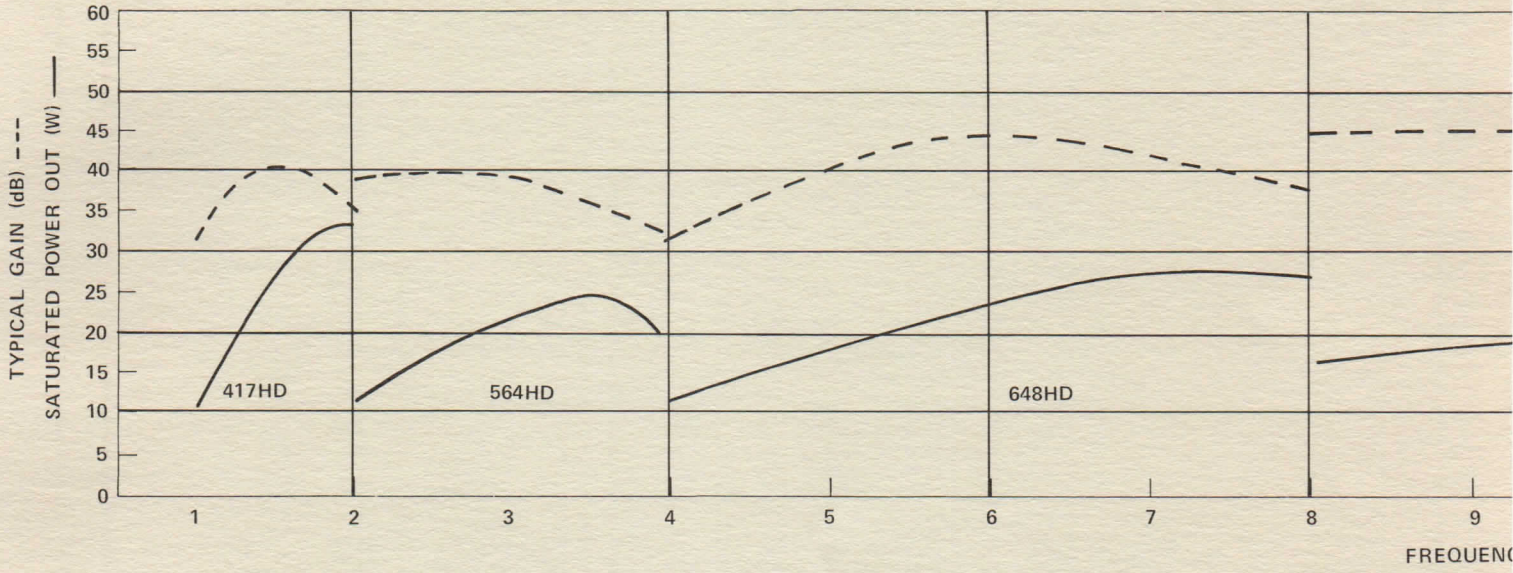

20 WATT SERIES

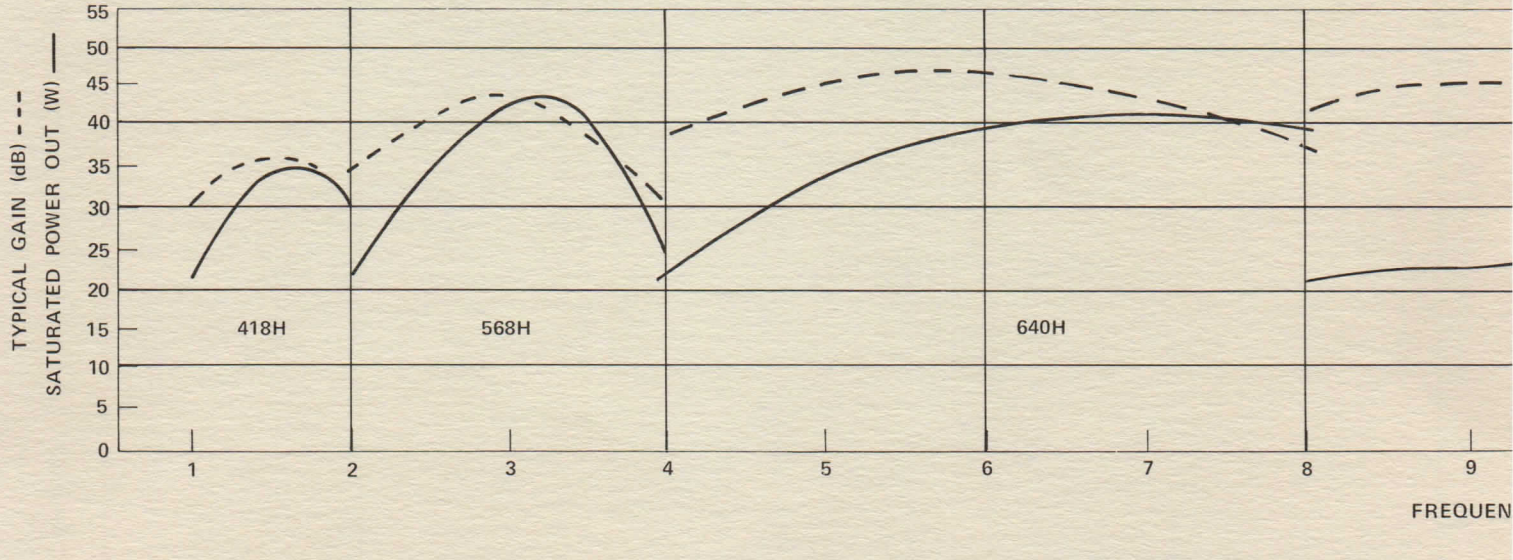

HUGHES
HUGHES AIRCRAFT COMPANY

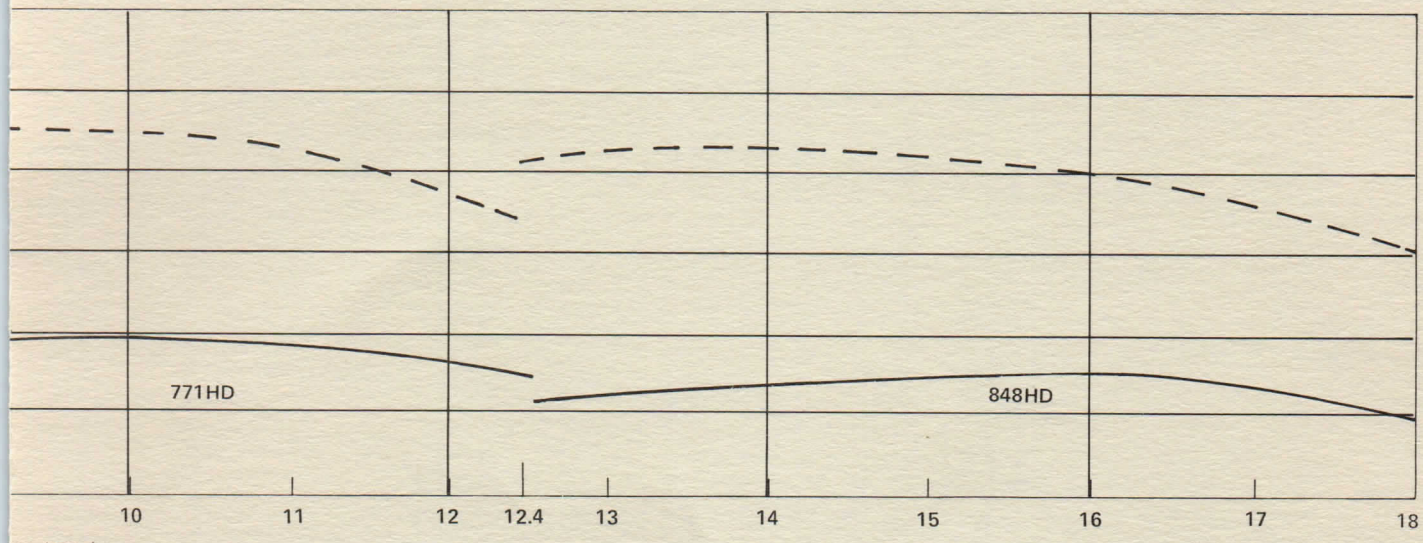

CY (GHz)

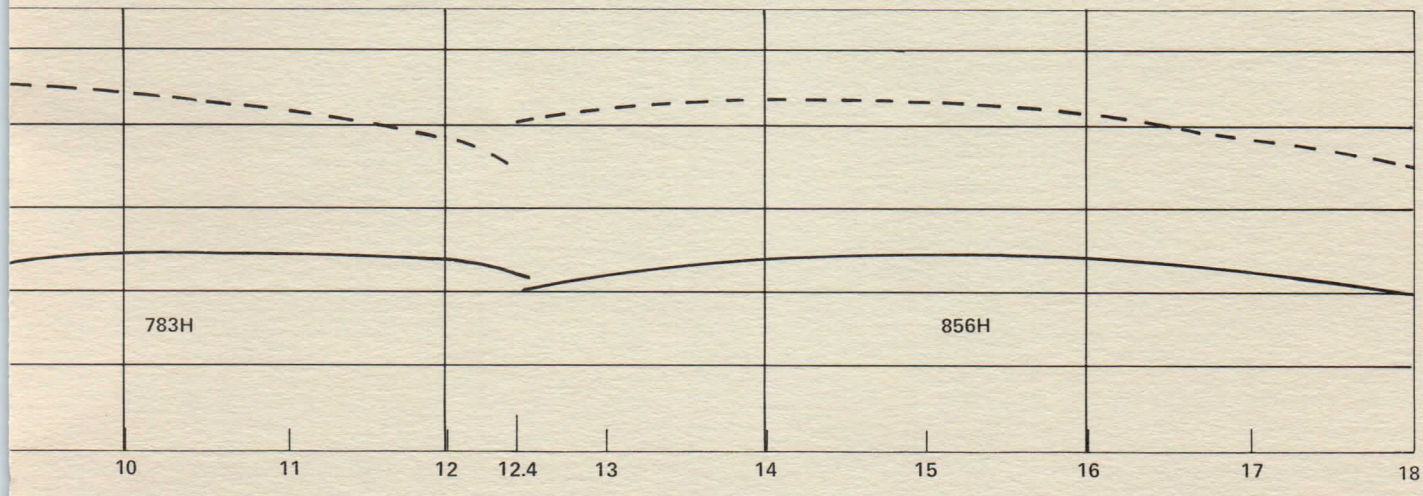

CY (GHz)

OPERATING PARAMETERS

1 WATT SERIES

Model Number	Frequency (GHz)	Cathode Voltage (E_k) (−Vdc)	Cathode Current (I_k) (mA maximum)	Anode Voltage (E_a) (Vdc maximum)	Anode Current (I_a) (mA maximum)	% Collector Depression (max.) (% of E_k)	Body Current (I_w) (mA maximum)
911H	18 – 26	3700 ±200	16.0	400	0.002	70	2.0

10 WATT SERIES

Model Number	Frequency (GHz)	Cathode Voltage (E_k) (−Vdc)	Cathode Current (I_k) (mA maximum)	Anode Voltage (E_a) (Vdc maximum)	Anode Current (I_a) (mA maximum)	% Collector Depression (max.) (% of E_k)	Body Current (I_w) (mA maximum)
417HD	1.0 – 2.0	1750 ±100	110	400	2.0	30	15.0
564HD	2.0 – 4.0	1500 ±100	80	400	2.0	30	15.0
648HD	4.0 – 8.0	2800 ±100	65	400	2.0	50	6.0
771HD	8.0 – 12.4	3400 ±100	50	400	1.5	50	6.0
848HD	12.4 – 18.0	3600 ±200	60	400	1.5	50	6.0

20 WATT SERIES

Model Number	Frequency (GHz)	Cathode Voltage (E_k) (−Vdc)	Cathode Current (I_k) (mA maximum)	Anode Voltage (E_a) (Vdc maximum)	Anode Current (I_a) (mA maximum)	% Collector Depression (max.) (% of E_k)	Body Current (I_w) (mA maximum)
418H	1.0 – 2.0	1700 ±150	165	400	2.0	30	15.0
568H	2.0 – 4.0	1950 ±100	120	400	1.0	30	15.0
640H	4.0 – 8.0	3500 ±150	100	400	1.0	50	6.0
783H	8.0 – 12.4	3950 ±150	65	400	1.0	50	6.0
856H	12.4 – 18.0	4500 ±200	80	400	0.5	50	3 0

BLOCK DIAGRAM

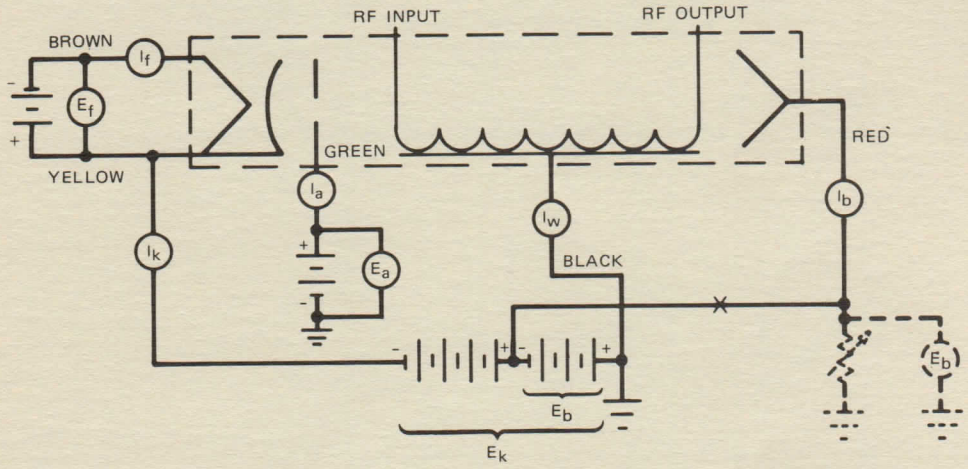

APPLICATIONS

The block diagram shows the interconnection between the tube and power supply and indicates monitoring points for voltages and currents. The configuration, as shown, is for depressed collector operation. As an alternate approach for depressed collector operation, eliminate the wire at point "X" and substitute dashed resistor. For non-depressed operation, eliminate the wire at point "X" and connect the collector lead (red) directly to ground.

EXTREME CAUTION should be taken when setting up tube voltages so as not to create an undervoltage or overvoltage condition. Power supply voltages must be within the following tolerances of name plate voltage prior to making connection to the tube: Heater (E_f ±5%; Anode (E_a) ±10%; Cathode (E_k) ±2%; Collector (E_b) ±5% of nameplate value.

COMMERCIAL TWTS

HUGHES
HUGHES AIRCRAFT COMPANY
ELECTRON DYNAMICS DIVISION

OUTLINE AND MOUNTING DRAWING

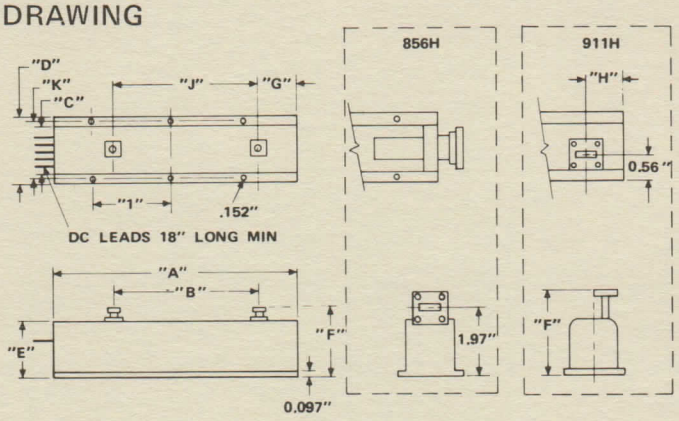

1 WATT SERIES

TWT	A	B	C	D	E	F	G	H	I	J	K
911H	10.50	6.10	1.90	2.25	2.0	2.8	N/A	1.75	N/A	4.00	2.05

DIMENSIONS ARE IN INCHES

10 WATT SERIES

TWT	A	B	C	D	E	F	G	H	I	J	K
417HD	13.00	9.20	1.80	2.25	2.00	3.50	2.50	1.30	4.00	8.00	2.05
564HD	9.50	5.57	1.38	2.00	1.77	2.27	1.75	1.50	3.00	6.00	1.75
648HD	9.50	5.57	1.38	2.00	1.77	2.27	1.75	1.50	3.00	6.00	1.75
771HD	9.50	5.32	1.38	2.00	1.77	2.27	1.75	1.50	3.00	6.00	1.75
848HD	8.50	4.60	1.38	2.00	1.77	2.27	1.25	1.50	3.00	6.00	1.75

DIMENSIONS ARE IN INCHES

20 WATT SERIES

TWT	A	B	C	D	E	F	G	H	I	J	K
418H	16.00	11.46	1.80	2.25	2.00	3.50	1.50	2.00	3.25	13.00	2.05
568H	9.50	5.57	1.38	2.00	1.77	2.27	1.75	1.50	3.00	6.00	1.75
640H	10.7	6.77	1.38	2.00	1.77	2.27	2.36	1.50	3.00	6.00	1.75
783H	9.50	5.32	1.38	2.00	1.77	2.27	1.75	1.50	3.00	6.00	1.75
856H	8.50		1.38	2.00	1.80	2.30	1.25		3.00	6.00	1.75

DIMENSIONS ARE IN INCHES

YOUR LOCAL REPRESENTATIVE

HUGHES
HUGHES AIRCRAFT COMPANY
ELECTRON DYNAMICS DIVISION MICROWAVE TRAVELING-WAVE TUBE PRODUCTS 3100 West Lomita Boulevard, Torrance, California 90509, Tel (213) 534-2121

Printed in USA - 8-76

HUGHES
HUGHES AIRCRAFT COMPANY
ELECTRON DYNAMICS DIVISION

GaAs FET PRODUCTS

MODELS C2421H-1000 & C2422H-1000 10 GHz MATCHED GaAs POWER FETs

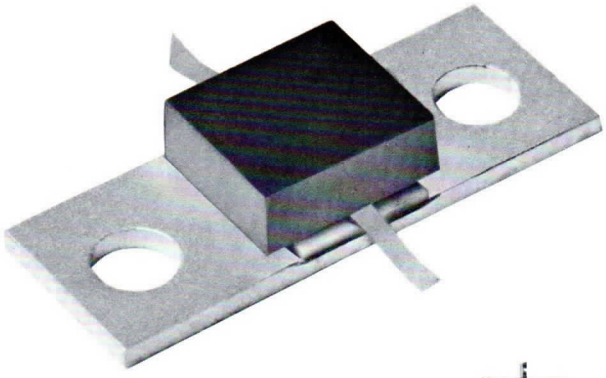

Actual size

FEATURES

1½ Watts Output
2 GHz 1 dB Bandwidth
27% Efficiency
50 ohms in/out

DESCRIPTION

Hughes model number C2421H-1000 and C2422H-1000 are single cell and dual cell 10 GHz broadband GaAs power FET chips mounted on internally matched chip carriers. The passivated chips are protected against mechanical damage by a plastic cap. The devices are guaranteed to operate in a 50-ohm system with no additional matching required by the user over a typically 2 GHz bandwidth. The chip carriers are compatible with 25 mil (0.635 mm) alumina microstrip circuits and have 25 x 1 mil (0.635 x 0.0254 mm) gold ribbon leads. The dual cell device is rated at 1¼ Watts minimum output power, and the single cell device is rated at ½ Watt minimum. The devices can be cascaded directly for multi-stage amplifier applications and/or combined with quadrature couplers to achieve higher power levels.

The matched transistors are 100% DC and RF tested with the measured values of power output, gain, power added efficiency, and the associated bias conditions supplied with each unit. The devices are RF tested in an alumina microstrip test circuit with precision APC-7 to microstrip transitions. This test fixture, Hughes model number Z1010H-1000, is available for sale separately.

The 0.8 micron aluminum gate devices are 100% visually inspected at 1000X magnification. Devices are screened by rejecting those with excessive change in DC characteristics after a 72-hour high temperature bake.

ABSOLUTE MAXIMUM RATINGS (Ambient Temperature Ta=25°C)

C2421H-1000 ½ WATT POWER FETs

Item	Symbol	Condition	Rating	Unit
Drain-Source Voltage	V_{DS}		12	V
Gate-Source Voltage	V_{GS}		−6	V
Total Power Dissipation	P_T	T_c = 25°C	3	W
Storage Temperature	T_{stg}		−65 to +175	°C
Channel Temperature	T_{ch}		+175	°C
Thermal Resistance	R_{th}	Channel to Case	50	°C/W

C2422H-1000 1¼ WATTS POWER FETs

Item	Symbol	Condition	Rating	Unit
Drain-Source Voltage	V_{DS}		12	V
Gate-Source Voltage	V_{GS}		−6	V
Total Power Dissipation	P_T	T_c = 25°C	6	W
Storage Temperature	T_{stg}		−65 to +175	°C
Channel Temperature	T_{ch}		+175	°C
Thermal Resistance	R_{th}	Channel to Case	25	°C/W

ELECTRICAL CHARACTERISTICS (Ambient Temperature Ta=25°C)

C2421H-1000 ½ WATT POWER FETs

Item	Symbol	Test Condition	Limit Min.	Limit Typ.	Limit Max.	Unit
Drain Current	I_{DSS}	V_{DS}=2V V_{GS}=0V	300	400	450	mA
Transconductance	g_m	V_{DS}=2V I_{DS}=200	—	100	—	mS
Pinch-Off Voltage	V_p	V_{DS}=2V I_{DS}=10mA	—	−4.5	—	V
Output Power*	P_{out}	V_{DS}=8.0 to 9.0V I_{DS}=$I_{DSS/2}$	27	27.8	—	dBm
Power Gain	G_p	f=10 GHz	6	6.8	—	dB
Power-Added Efficiency	η_{add}	Pin=+21 dBm	—	25	—	%

*Chip carrier tested in 50Ω system with the power levels referenced to the chip carrier

C2422H-1000 1¼ WATTS POWER FETs

Item	Symbol	Test Condition	Limit Min.	Limit Typ.	Limit Max.	Unit
Drain Current	I_{DSS}	V_{DS}=2V V_{GS}=0V	600	750	900	mA
Transconductance	g_m	V_{DS}=2V I_{DS}=400	—	190	—	mS
Pinch-Off Voltage	V_p	V_{DS}=2V I_{DS}=10mA	—	−4.5	—	V
Output Power*	P_{out}	V_{DS}=8.0 to 9.0V I_{DS}=$I_{DSS/2}$	31	31.8	—	dBm
Power Gain	G_p	f=10 GHz	5	5.8	—	dB
Power-Added Efficiency	η_{add}	Pin=+26 dBm	—	27	—	%

*Chip carrier tested in 50Ω system with the power levels referenced to the chip carrier

MODELS C2421H-1000 & C2422H-1000
10 GHz MATCHED GaAs POWER FETs

HUGHES
HUGHES AIRCRAFT COMPANY
ELECTRON DYNAMICS DIVISION

GaAs FET PRODUCTS

INPUT IMPEDANCE VS FREQUENCY (GHz)
(Model C2422H-1000 typical)

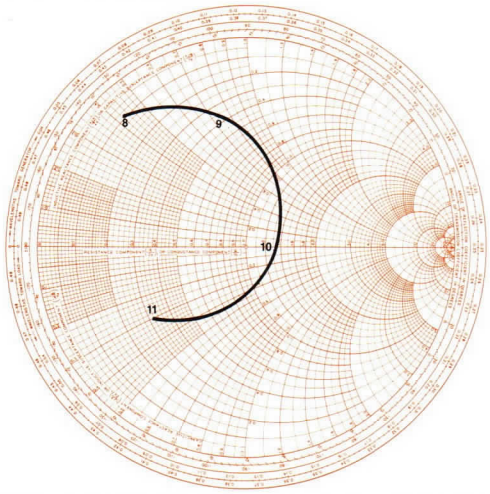

CONTOURS OF CONSTANT OUTPUT POWER ON THE LOAD IMPEDANCE PLANE AT 10 GHz (Model C2422H-1000 typical)

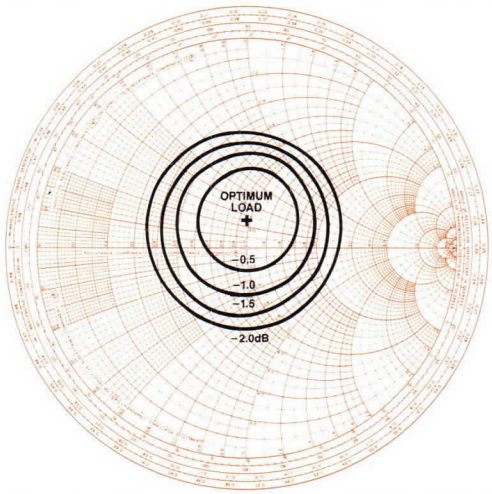

OUTPUT POWER VS FREQUENCY
(Model C2422H-1000 typical)

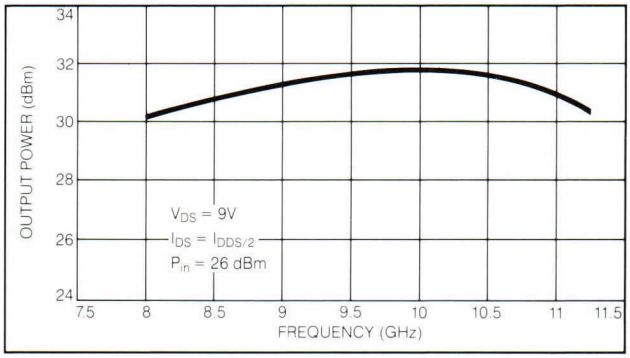

OUTPUT POWER AND EFFICIENCY VS INPUT POWER
(Model C2422H-1000 typical)

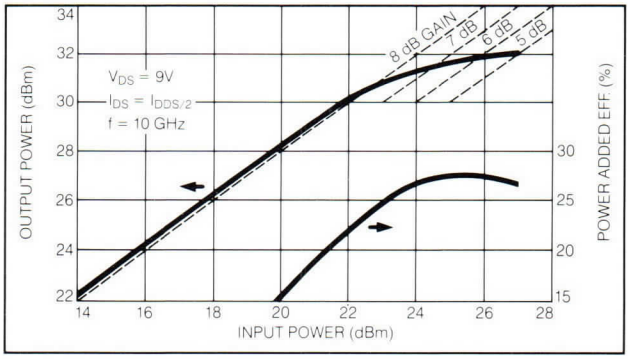

OUTLINE AND MOUNTING DRAWING

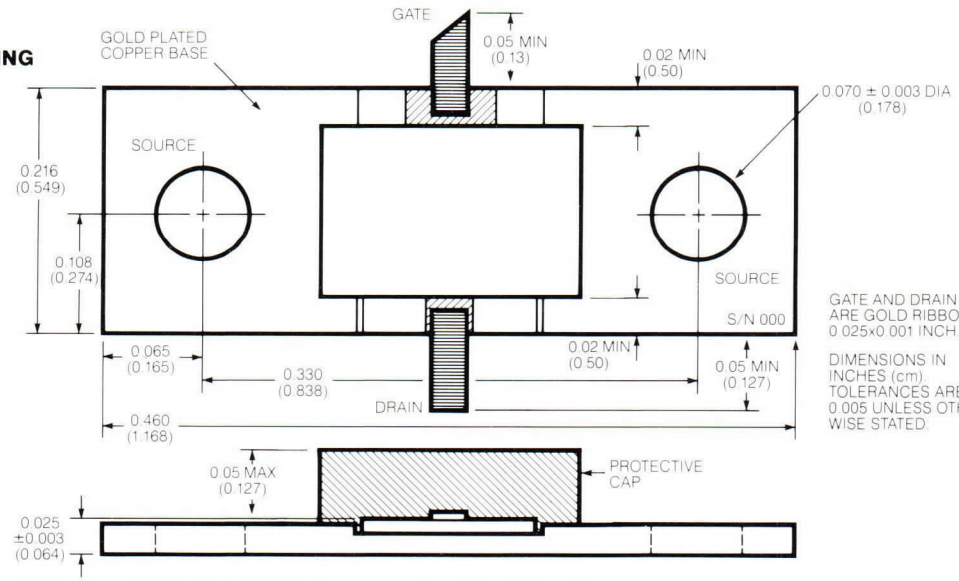

GATE AND DRAIN LEADS ARE GOLD RIBBON 0.025×0.001 INCH.

DIMENSIONS IN INCHES (cm). TOLERANCES ARE 0.005 UNLESS OTHERWISE STATED.

Printed in U.S.A. 5/83

HUGHES
HUGHES AIRCRAFT COMPANY
ELECTRON DYNAMICS DIVISION

GaAs FET
PRODUCTS

MODELS C2421H-1300 & C2422H-1300
13 GHz MATCHED GaAs POWER FETs

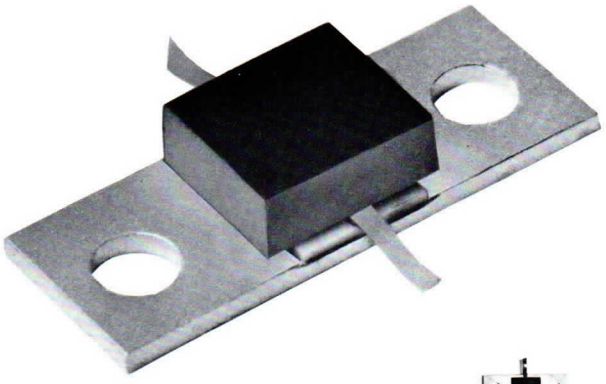

Actual size

FEATURES

1½ Watts Output
2 GHz 1 dB Bandwidth
27% Efficiency
50 ohms in/out

DESCRIPTION

Hughes model number C2421H-1300 and C2422H-1300 are single cell and dual cell 13 GHz broadband GaAs power FET chips mounted on internally matched chip carriers. The passivated chips are protected against mechanical damage by a plastic cap. The devices are guaranteed to operate in a 50-ohm system with no additional matching required by the user over a typically 2 GHz bandwidth. The chip carriers are compatible with 25 mil (0.635 mm) alumina microstrip circuits and have 25 x 1 mil (0.635 x 0.0254 mm) gold ribbon leads. The dual cell device is rated at 1¼ Watts minimum output power, and the single cell device is rated at ½ Watt minimum. The devices can be cascaded directly for multi-stage amplifier applications and/or combined with quadrature couplers to achieve higher power levels.

The matched transistors are 100% DC and RF tested with the measured values of power output, gain, power added efficiency, and the associated bias conditions supplied with each unit. The devices are RF tested in an alumina microstrip test circuit with precision APC-7 to microstrip transitions. This test fixture, Hughes model number Z1010H-1300, is available for sale separately.

The 0.8 micron aluminum gate devices are 100% visually inspected at 1000X magnification. Devices are screened by rejecting those with excessive change in DC characteristics after a 72-hour high temperature bake.

ABSOLUTE MAXIMUM RATINGS (Ambient Temperature Ta=25°C)

C2421H-1300 ½ WATT POWER FETs

Item	Symbol	Condition	Rating	Unit
Drain-Source Voltage	V_{DS}		12	V
Gate-Source Voltage	V_{GS}		−6	V
Total Power Dissipation	P_T	T_c = 25°C	3	W
Storage Temperature	T_{stg}		−65 to +175	°C
Channel Temperature	T_{ch}		+175	°C
Thermal Resistance	R_{th}	Channel to Case	50	°C/W

C2422H-1300 1¼ WATTS POWER FETs

Item	Symbol	Condition	Rating	Unit
Drain-Source Voltage	V_{DS}		12	V
Gate-Source Voltage	V_{GS}		−6	V
Total Power Dissipation	P_T	T_c = 25°C	6	W
Storage Temperature	T_{stg}		−65 to +175	°C
Channel Temperature	T_{ch}		+175	°C
Thermal Resistance	R_{th}	Channel to Case	25	°C/W

ELECTRICAL CHARACTERISTICS (Ambient Temperature Ta=25°C)

C2421H-1300 ½ WATT POWER FETs

Item	Symbol	Test Condition	Limit			Unit
			Min.	Typ.	Max.	
Drain Current	I_{DSS}	V_{DS}=2V V_{GS}=0V	300	400	450	mA
Transconductance	g_m	V_{DS}=2V I_{DS}=200	—	100	—	mS
Pinch-Off Voltage	V_p	V_{DS}=2V I_{DS}=10mA	—	−4.5	—	V
Output Power*	P_{out}	V_{DS}=8.0 to 9.0V I_{DS}=$I_{DSS/2}$	27	27.8	—	dBm
Power Gain	G_p	f=13 GHz	6	6.8	—	dB
Power-Added Efficiency	η_{add}	Pin=+21 dBm	—	25	—	%

*Chip carrier tested in 50Ω system with the power levels referenced to the chip carrier

C2422H-1300 1¼ WATTS POWER FETs

Item	Symbol	Test Condition	Limit			Unit
			Min.	Typ.	Max.	
Drain Current	I_{DSS}	V_{DS}=2V V_{GS}=0V	600	750	900	mA
Transconductance	g_m	V_{DS}=2V I_{DS}=400	—	190	—	mS
Pinch-Off Voltage	V_p	V_{DS}=2V I_{DS}=10mA	—	−4.5	—	V
Output Power*	P_{out}	V_{DS}=8.0 to 9.0V I_{DS}=$I_{DSS/2}$	31	31.8	—	dBm
Power Gain	G_p	f=13 GHz	5	5.8	—	dB
Power-Added Efficiency	η_{add}	Pin=+26 dBm	—	27	—	%

*Chip carrier tested in 50Ω system with the power levels referenced to the chip carrier

MODELS C2421H-1300 & C2422H-1300
13 GHz MATCHED GaAs POWER FETs

HUGHES
HUGHES AIRCRAFT COMPANY
ELECTRON DYNAMICS DIVISION

GaAs FET PRODUCTS

INPUT IMPEDANCE VS FREQUENCY (GHz)
(Model C2422H-1300 typical)

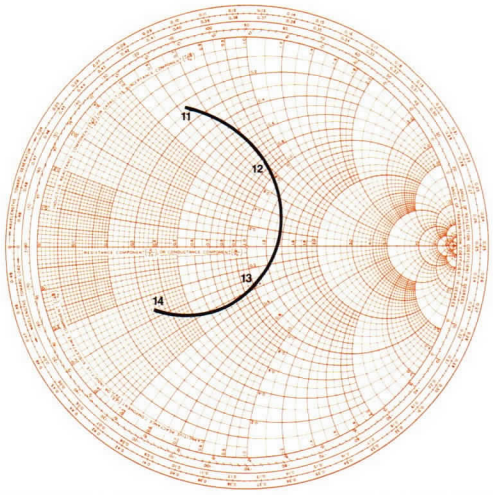

CONTOURS OF CONSTANT OUTPUT POWER ON THE LOAD IMPEDANCE PLANE AT 13 GHz (Model C2422H-1300 typical)

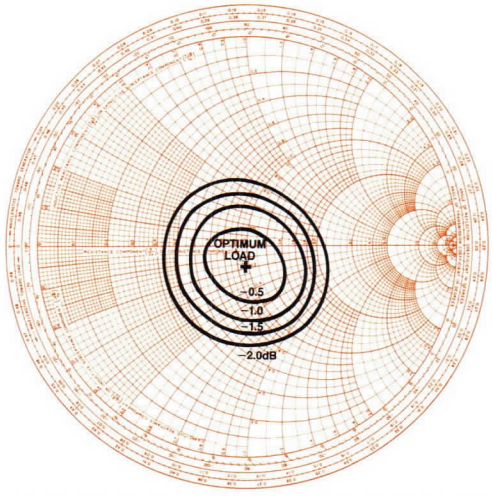

OUTPUT POWER VS FREQUENCY
(Model C2422H-1300 typical)

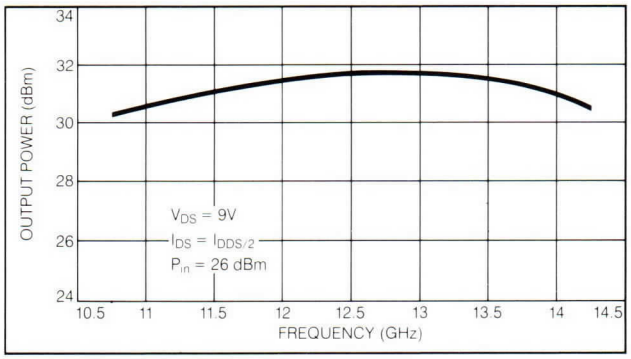

OUTPUT POWER AND EFFICIENCY VS INPUT POWER
(Model C2422H-1300 typical)

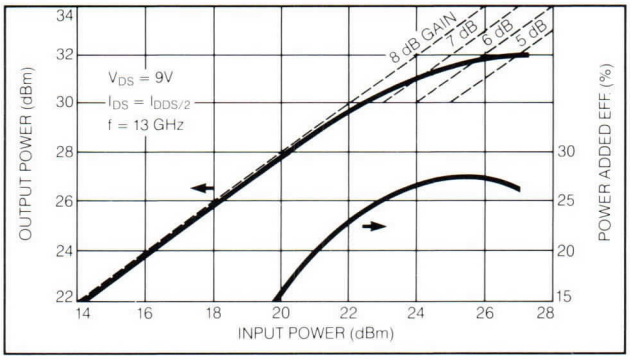

OUTLINE AND MOUNTING DRAWING

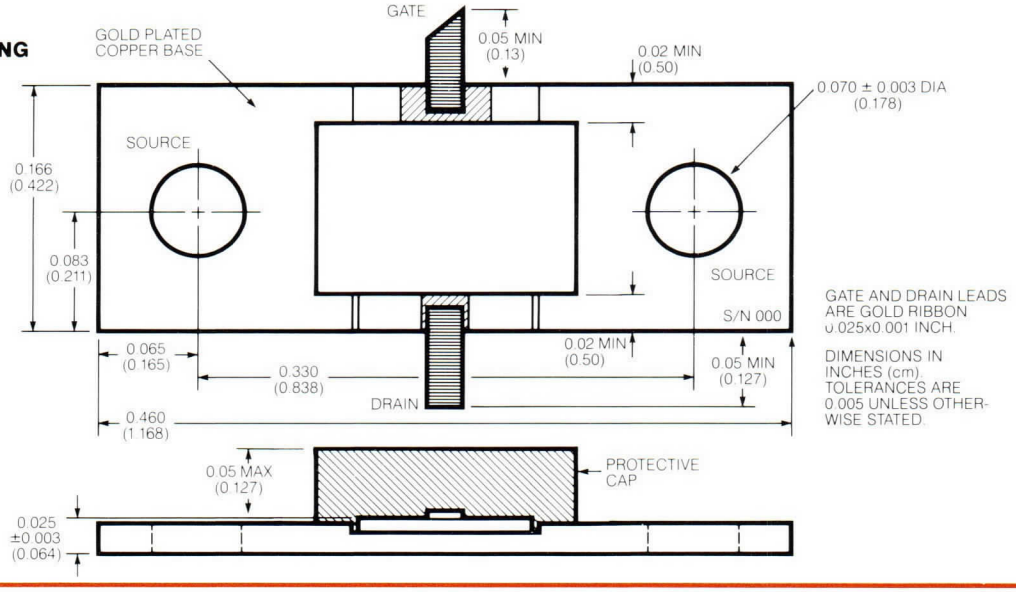

GATE AND DRAIN LEADS ARE GOLD RIBBON 0.025x0.001 INCH.

DIMENSIONS IN INCHES (cm). TOLERANCES ARE 0.005 UNLESS OTHERWISE STATED.

Printed in U.S.A. 5/83

HUGHES
HUGHES AIRCRAFT COMPANY
ELECTRON DYNAMICS DIVISION

GaAs FET
PRODUCTS

MODELS C2421H-1500 & C2422H-1500
15 GHz MATCHED GaAs POWER FETs

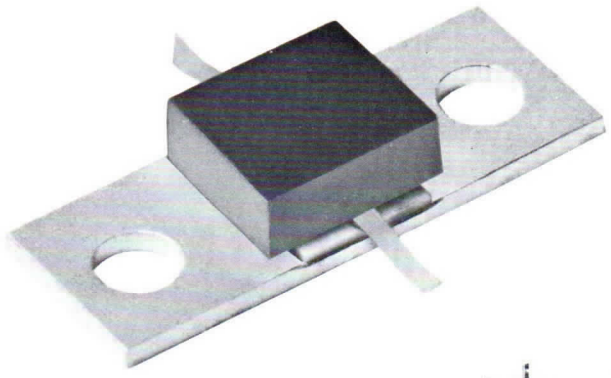

Actual Size

FEATURES

1½ Watts Output
2 GHz 1 dB Bandwidth
24% Efficiency
50 ohms in/out

DESCRIPTION

Hughes model number C2421H-1500 and C2422H-1500 are single cell and dual cell 15 GHz broadband GaAs power FET chips mounted on internally matched chip carriers. The passivated chips are protected against mechanical damage by a plastic cap. The devices are guaranteed to operate in a 50-ohm system with no additional matching required by the user over a typically 2 GHz bandwidth. The chip carriers are compatible with 25 mil (0.635 mm) alumina mircrostrip circuits and have 25 x 1 mil (0.635 x 0.0254 mm) gold ribbon leads. The dual cell device is rated at 1¼ Watts minimum output power, and the single cell device is rated at ½ Watt minimum. The devices can be cascaded directly for multi-stage amplifier applications and/or combined with quadrature couplers to achieve higher power levels.

The matched transistors are 100% DC and RF tested with the measured values of power output, gain, power added efficiency, and the associated bias conditions supplied with each unit. The devices are RF tested in an alumina microstrip test circuit with precision APC-7 to microstrip transitions. This test fixture, Hughes model number Z1010H-1500, is available for sale separately.

The 0.8 micron aluminum gate devices are 100% visually inspected at 1000X magnification. Devices are screened by rejecting those with excessive change in DC characteristics after a 72-hour high temperature bake.

ABSOLUTE MAXIMUM RATINGS (Ambient Temperature T_a=25°C)

C2421H-1500 ½ WATT MINIMUM POWER FETs

Item	Symbol	Condition	Rating	Unit
Drain—Source Voltage	V_{DS}		12	V
Gate—Source Voltage	V_{GS}		−6	V
Total Power Dissipation	P_T	T_C=25°C	3	W
Storage Temperature	T_{stg}		−65 to +175	°C
Channel Temperature	T_{ch}		+175	°C
Thermal Resistance	R_{th}	Channel to Case	50	°C/W

C2422H-1500 1¼ WATTS MINIMUM POWER FETs

Item	Symbol	Condition	Rating	Unit
Drain—Source Voltage	V_{DS}		12	V
Gate—Source Voltage	V_{GS}		−6	V
Total Power Dissipation	P_T	T_C=25°C	6	W
Storage Temperature	T_{stg}		−65 to +175	°C
Channel Temperature	T_{ch}		+175	°C
Thermal Resistance	R_{th}	Channel to Case	25	°C/W

ELECTRICAL CHARACTERISTICS (Ambient Temperature T_a=25°C)

C2421H-1500 ½ WATT MINIMUM POWER FETs

Item	Symbol	Test Condition	Limit			Unit
			Min.	Typ.	Max.	
Drain Current	I_{DSS}	V_{DS}=2V V_{GS}=0V	300	400	450	mA
Transconductance	g_m	V_{DS}=2V I_{DS}=200	—	100	—	mS
Pinch-Off Voltage	V_p	V_{DS}=2V I_{DS}=10mA	—	−4.5	—	V
Output Power*	P_{out}	V_{DS}=8.0 to 9.0V I_{DS}=$I_{DSS/2}$	27	27.6	—	dBm
Power Gain*	G_p	f=15 GHz	6	6.6	—	dB
Power-Added Efficiency*	η_{add}	Pin=+21 dBm	—	22	—	%

*Chip carrier tested in 50Ω system with the power levels referenced to the chip carrier

C2422H-1500 1¼ WATTS MINIMUM POWER FETs

Item	Symbol	Test Condition	Limit			Unit
			Min.	Typ.	Max.	
Drain Current	I_{DSS}	V_{DS}=2V V_{GS}=0V	600	750	900	mA
Transconductance	g_m	V_{DS}=2V I_{DS}=400	—	190	—	mS
Pinch-Off Voltage	V_p	V_{DS}=2V I_{DS}=10mA	—	−4.5	—	V
Output Power*	P_{out}	V_{DS}=8.0 to 9.0V I_{DS}=$I_{DSS/2}$	31	31.3	—	dBm
Power Gain*	G_p	f=15 GHz	5	5.3	—	dB
Power-Added Efficiency*	η_{add}	Pin=+26 dBm	—	24	—	%

*Chip carrier tested in 50Ω system with the power levels referenced to the chip carrier

MODELS C2421H-1500 & C2422H-1500
15 GHz MATCHED GaAs POWER FETs

HUGHES
HUGHES AIRCRAFT COMPANY
ELECTRON DYNAMICS DIVISION

GaAs FET PRODUCTS

INPUT IMPEDANCE VS FREQUENCY (GHz)
(Model C2422H-1500 typical)

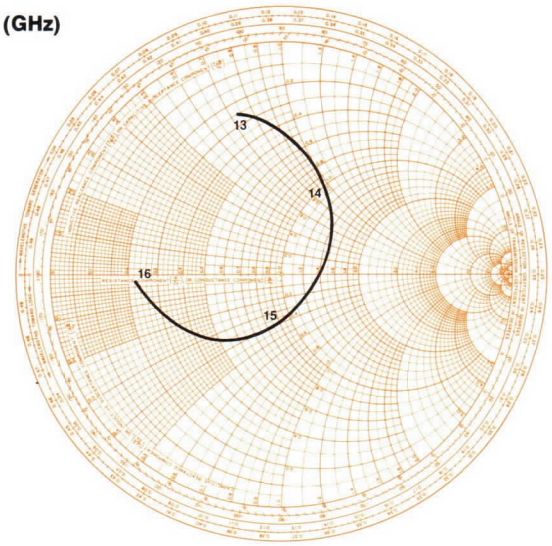

OUTPUT POWER VS FREQUENCY
(Model C2422H-1500 typical)

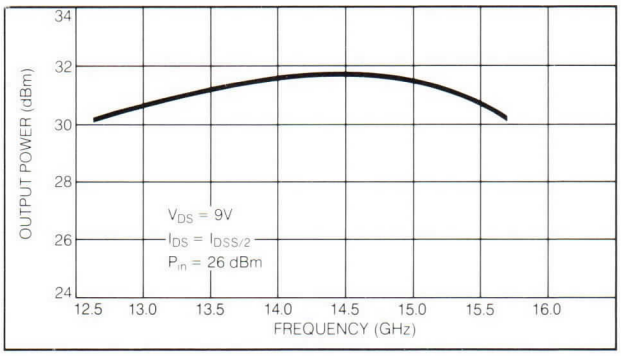

OUTPUT POWER AND EFFICIENCY VS INPUT POWER
(Model C2422H-1500 typical)

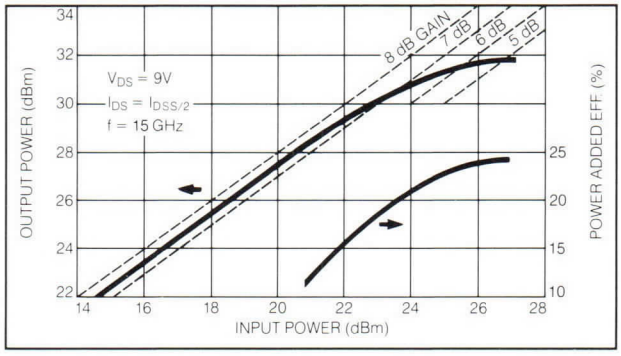

OUTLINE AND MOUNTING DRAWING

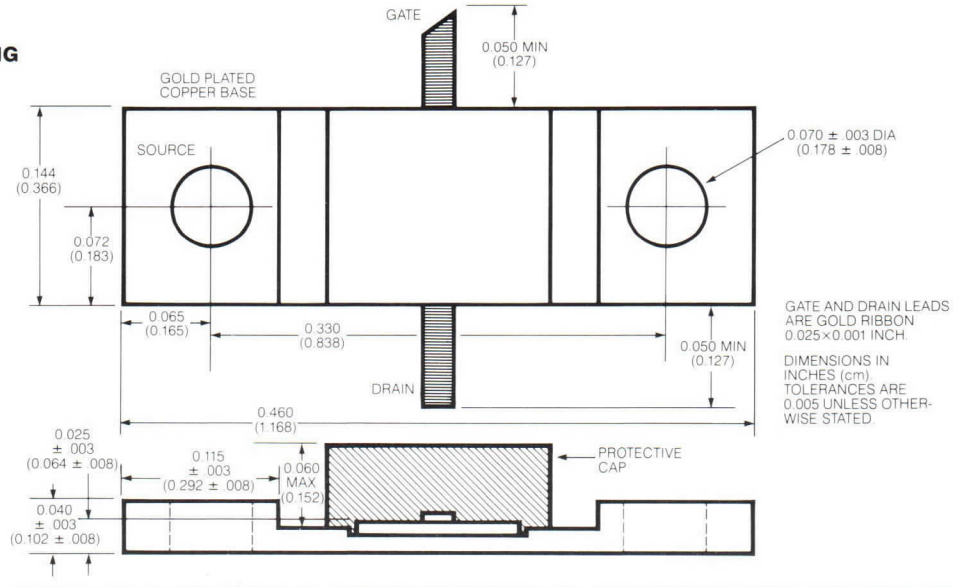

Printed in U.S.A. 9/83

HUGHES
HUGHES AIRCRAFT COMPANY
ELECTRON DYNAMICS DIVISION

SOLID-STATE
MILLIMETER-WAVE
PRODUCTS

SUPPLEMENTARY DATA TO RECEIVER PRODUCTS CATALOG

44957H

94 GHz TRANSCEIVER/CONVERTER

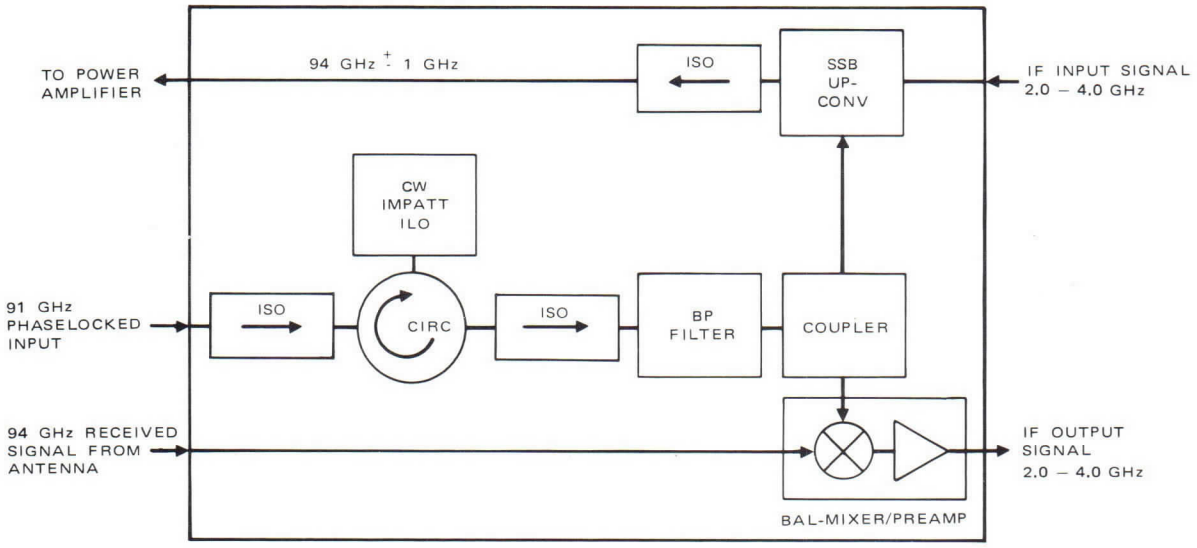

DESCRIPTION

The Hughes Model No. 44957H 94 GHz Transceiver/Converter is a complete RF subsystem that allows the user to easily convert an S-band system to 94 GHz operation. The subsystem consists of a single-sideband upconverter which is driven by a 91 GHz local oscillator. This local oscillator also drives the balanced mixer-preamplifier which then downconverts the received 94 GHz signal back to the original S-band frequency. Frequency stability for this local oscillator is determined by an externally supplied 91 GHz phase-locked oscillator. This 91 GHz signal is amplified by an injection-locked IMPATT oscillator and then filtered before it is split to serve both the upconverter and the balanced mixer preamplifier. The output of the upconverter can be power amplified to the appropriate level.

SPECIFICATIONS

91 GHz Input Power	+5 dBm minimum
S-band Signal Input Power	+17 dBm minimum
S-band Signal Frequency	2.0 – 4.0 GHz
Upconverter Output Power	
Upper Sideband	0 dBm minimum
Lower Sideband	-30 dBm maximum
Local Oscillator	-15 dBm maximum
DSB Receiver Noise Figure	10 dB maximum
Receiver IF Bandwidth	2.0 – 4.0 GHz
Receiver RF-IF Gain	20 dB minimum
Receiver LO to RF Isolation	20 dB minimum

NOTE: All specifications apply at 25° C

HUGHES
HUGHES AIRCRAFT COMPANY
ELECTRON DYNAMICS DIVISION 3100 West Lomita Boulevard, P.O. Box 2999, Torrance, California 90509, Tel (213) 534-2121

Printed in U.S.A. 3/80

HUGHES

HUGHES AIRCRAFT COMPANY

ELECTRON DYNAMICS DIVISION

VOLTAGE CONTROLLED GUNN EFFECT OSCILLATORS 8.0 - 12.4 GHz

FEATURES

- Electronic Tuning to 1200 MHz
- Output Powers to 300 mW
- Low AM Noise
- Modulation Rates Over 40 MHz

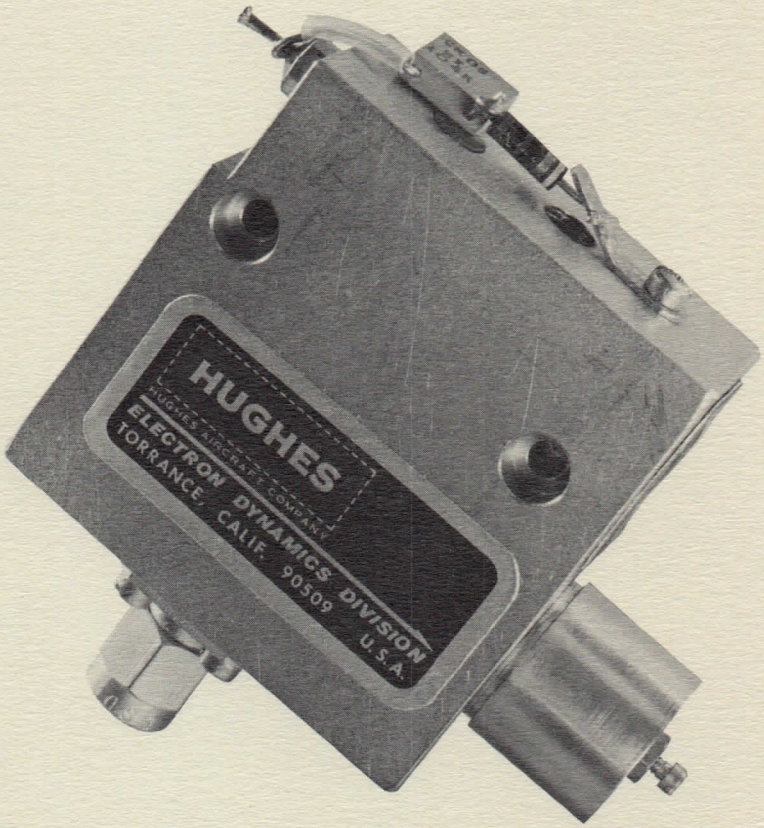

DESCRIPTION

The Hughes 416XXH Series of 8 to 12.4 GHz Voltage Controlled Oscillators are varactor-tuned Gunn oscillators. They are designed to achieve high frequency modulation while preserving the low AM and FM noise and high stability typical of Gunn oscillators. Intended for use in AFC or phase-locked loops or as directly modulatable transmitter oscillators, the range of specifications available make these oscillators appropriate for many custom applications.

The oscillators in this series deliver from 50 mW to 300 mW of power with voltage-tuned bandwidths of 350 to 1200 MHz. Each unit is factory adjusted to one specific frequency, power level and tuning bandwidth, and is mechanically tunable ±50 MHz about the center frequency. Upon request, Hughes can supply these oscillators with higher power levels and/or wider tuning bandwidths to meet specific customer requirements. Additionally, Hughes has several circuits available for linearizing voltage-frequency response, electrically compensating temperature drifts, and regulating oscillator temperatures.

SPECIFICATIONS

CENTER FREQUENCY (GHz) ①	MINIMUM POWER OUTPUT (mW)	MINIMUM VOLTAGE TUNING BANDWIDTH (MHz)	MAXIMUM DC BIAS (V)	TYPICAL DC BIAS CURRENT (mA)	MAXIMUM THRESHOLD CURRENT (mA)	MODEL NUMBER
8.0 – 12.4	50	1200	+12	1300	2000	41602H
	50	350	+12	800	1200	41603H
	100	800	+12	1300	2000	41604H
	300	350	+12	1300	2000	41605H

ELECTRICAL

Mechanical Tuning Bandwidth . . . . . ±50 MHz minimum
Power Stability . . . . . –0.03 dB/°C maximum
Frequency Stability . . . . . –0.75 MHz/°C maximum
Pushing Factor (primary power) . . . . . 15 MHz/V typical
Pulling Factor (at maximum VSWR) . . . . . 10 MHz typical
Load VSWR . . . . . 1.2:1 maximum
AM Noise ② . . . . . –120 dBc typical
Modulation Sensitivity . . . . . 10 to 40 MHz/V typical
Tuning Voltage (referred to ground) . . . . . +12 to –25 V typical
Modulation Rate . . . . . to 40 MHz minimum
Spurious Suppression . . . . . –60 dBc minimum ③
Harmonic Suppression . . . . . –25 dBc typical

MECHANICAL

Primary DC Connector . . . . . solder pin
Voltage Tuning Connector . . . . . solder pin
RF Connector . . . . . SMA male ④
Weight . . . . . 7.0 (108.8 g) maximum
Mounting and Dimensions . . . . . see outline drawing

ENVIRONMENTAL

Operating Temperature (flange temperature) . . . . . 0° to 50°C ⑤
Storage Temperature . . . . . –54 to +85°C

NOTES:

① When ordering, specify the exact center frequency and power output. The value of center frequency plus tuning range cannot exceed the upper limit of frequency coverage.

② AM noise as measured on a typical oscillator in a 1 kHz bandwidth 10 kHz from the carrier.

③ In tuning bandwidth; –60 dBc typical 8.0 to 12.4 GHz bandwidth.

④ SMA female also available.

⑤ Oscillators may be operated up to +70°C and below 0°C without deleterious effects. If continued operation at these temperatures is required, consult factory.

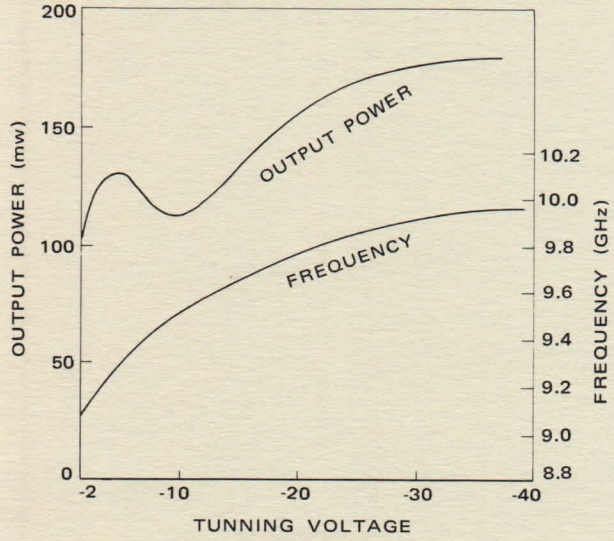

TYPICAL OUTPUT POWER AND FREQUENCY VERSES TUNING VOLTAGE

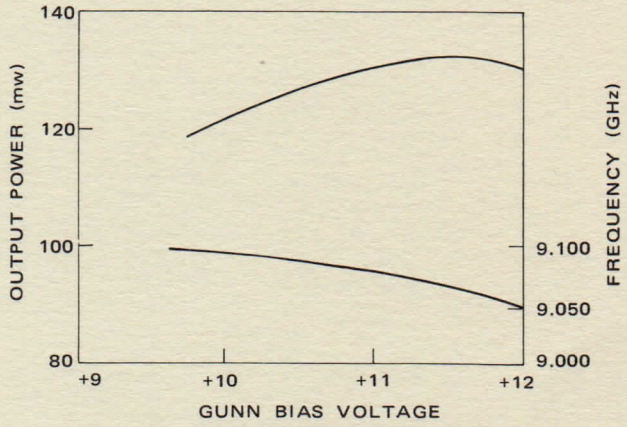

TYPICIAL OUTPUT POWER AND FREQUENCY VERSES GUNN BIAS VOLTAGE

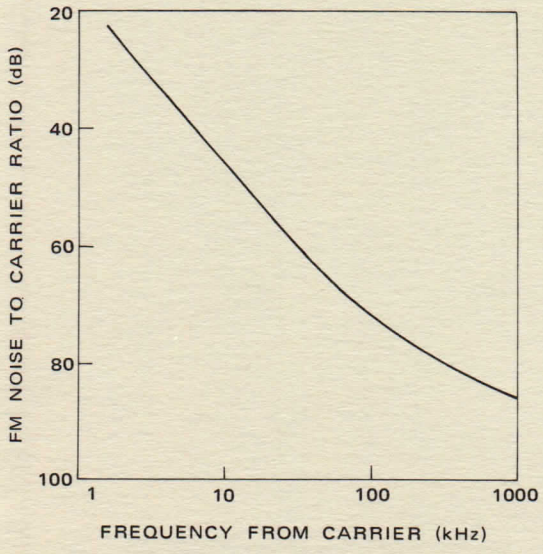

SINGLE SIDEBAND FM NOISE TO CARRIER RATIO IN A 1 kHz BANDWIDTH

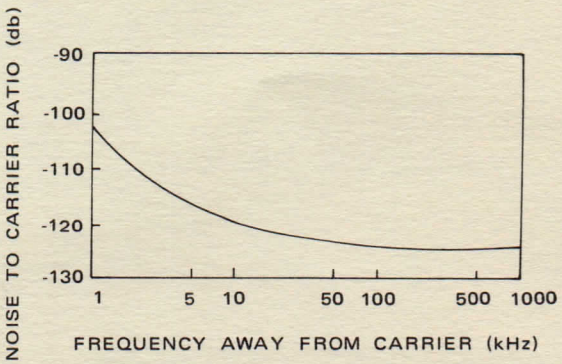

AM NOISE TO CARRIER RATIO IN 1 kHz BANDWIDTH

VOLTAGE CONTROLLED GUNN EFFECT OSCILLATORS 8.0 - 12.4 GHz

HUGHES

HUGHES AIRCRAFT COMPANY

ELECTRON DYNAMICS DIVISION

OUTLINE AND MOUNTING DRAWING

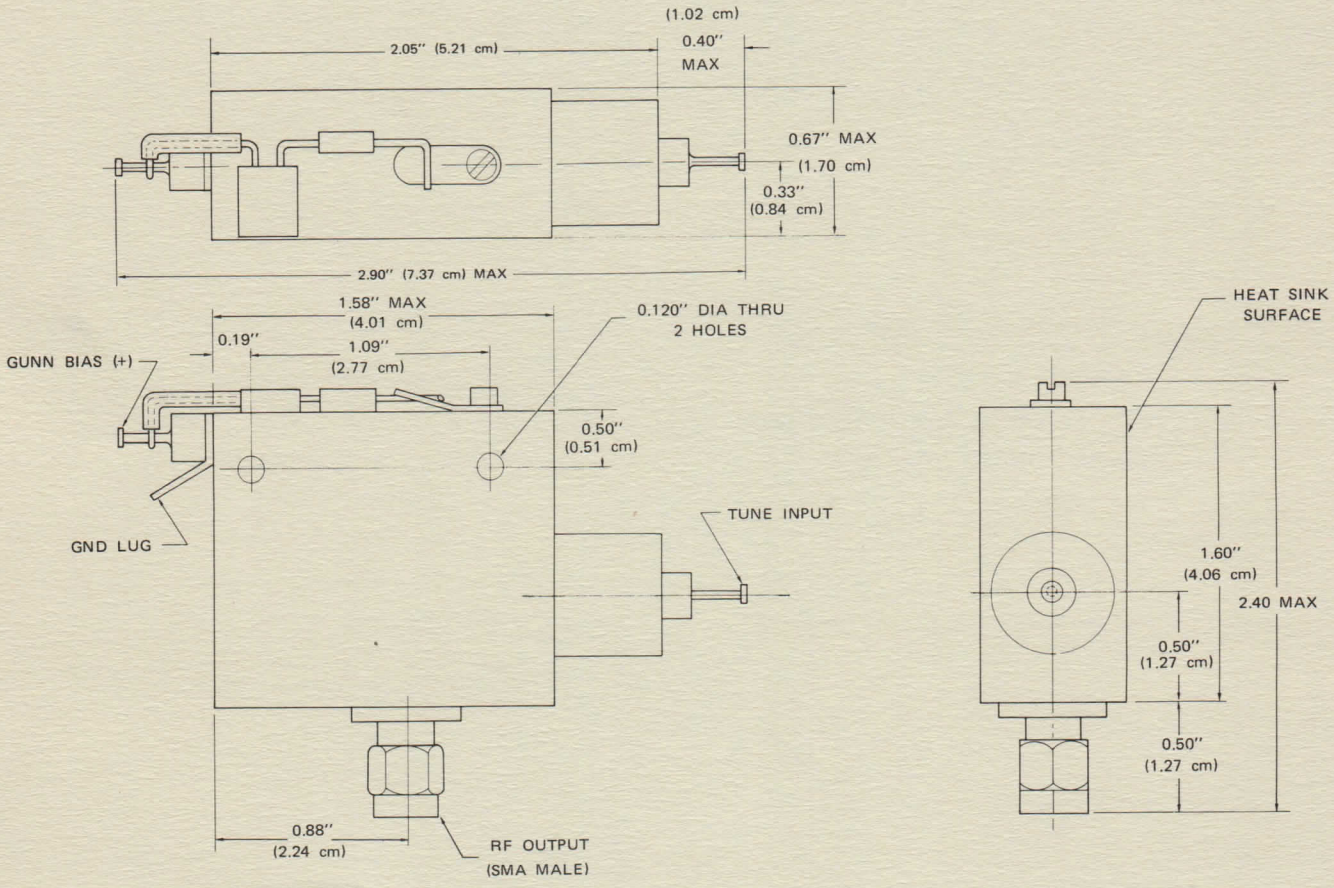

YOUR LOCAL REPRESENTATIVE

HUGHES AIRCRAFT COMPANY

ELECTRON DYNAMICS DIVISION SOLID-STATE MICROWAVE PRODUCTS 3100 West Lomita Boulevard, Torrance, California 90509, Tel (213) 534-2121

HUGHES

HUGHES AIRCRAFT COMPANY

ELECTRON DYNAMICS DIVISION

SUPPLEMENTARY DATA TO TRANSMITTER PRODUCTS CATALOG*

CW IMPATT SOURCES

FEATURES

- 200 mW 26.5 to 96 GHz
- 50 mW to 110 GHz
- 100 MHz Electrical Tunability
- Integral Isolator and Regulator

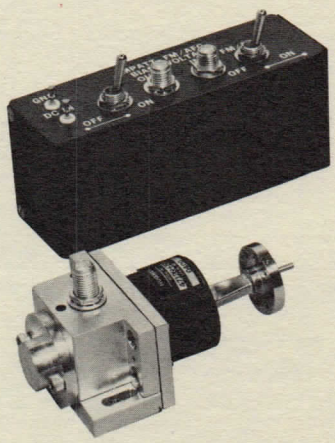

DESCRIPTION

Hughes CW IMPATT Sources consist of a silicon IMPATT oscillator with an integral isolator and a regulator with connecting cable. They are available in six waveguide bands between 26.5 GHz and 110 GHz.

The sources feature power outputs of 200 mW to 96 GHz and 50 mW to 110 GHz. The frequency of oscillation can be electrically tuned over 100 MHz by an external 0 to 10 volt signal applied to an input connector on the regulator. This tuning feature allows frequency stabilization of the source by an external AFC loop. A complete line of phase locked sources is also available. (See Receiver Products catalog).

ELECTRICAL SPECIFICATIONS ①

Electrical Tuning Bandwidth at 3 dB pts. (MHz min)	100
Spurious Outputs (dBc typ)	50
Frequency Stability (%/°C typ)	−0.001
Amplitude Stability (dB/°C typ)	−0.01
Operating Case Temperature (°C min/max)	15/50
DC Power Requirements (V/mA typ)	+50/100
Tuning Voltage (V)	0–10

POWER OUTPUTS AVAILABLE

② Frequency Band (GHz)	Ka (26.5–40)	Q (33–50)	U (40–60)	V (50–75)	E (60–90)	W (75–110)
Power Output (mW)	200	200	200	100 200	50 100 200	20 50 100** 200**

**Available to 96 GHz only.

NOTE: All specifications apply at 25°C ambient temperature.

① Consult factory for requirements not covered by those specifications.

② Center frequency to be specified at time of order.

*Data sheet supplements pages 6 and 7 of Transmitter Products Catalog.

SUPPLEMENTARY DATA TO TRANSMITTER PRODUCTS CATALOG

CW IMPATT SOURCES

HUGHES

HUGHES AIRCRAFT COMPANY

ELECTRON DYNAMICS DIVISION

MECHANICAL SPECIFICATIONS

FREQUENCY BAND (GHz)		Ka (26.5-40)	Q (33-50)	U (40-60)	V (50-75)	E (60-90)	W (75-110)
DIMENSIONS (inches (cm))	A	1.47 (3.73)	1.47 (3.73)	1.47 (3.73)	1.10 (2.79)	1.10 (2.79)	1.10 (2.79)
	B	3.60 (9.14)	3.30 (8.38)	3.20 (8.13)	2.80 (7.11)	2.70 (6.86)	2.65 (6.73)
	C	1.88 (4.77)	1.88 (4.77)	1.88 (4.77)	1.56 (3.96)	1.56 (3.96)	1.56 (3.96)
	D	0.66 (1.67)	0.66 (1.67)	0.66 (1.67)	0.49 (1.24)	0.49 (1.24)	0.49 (1.24)
	E	1.56 (3.96)	1.56 (3.96)	1.56 (3.96)	1.25 (3.17)	1.25 (3.17)	1.25 (3.17)
	F	0.50 (1.27)	0.50 (1.27)	0.50 (1.27)	0.38 (0.96)	0.38 (0.96)	0.38 (0.96)
WAVEGUIDE SIZE ①		WR-28	WR-22	WR-19	WR-15	WR-12	WR-10
WAVEGUIDE FLANGE ②		UG-381/U ② UG-599/U ③	UG-383/U	UG-383/U mod	UG-385/U	UG-387/U	UG-387/U mod

① Refer to page 16 of Transmitter Products Catalog for specifications and MIL specification cross reference
② Round flange ③ Square flange

OUTLINE AND MOUNTING DRAWINGS

OSCILLATOR

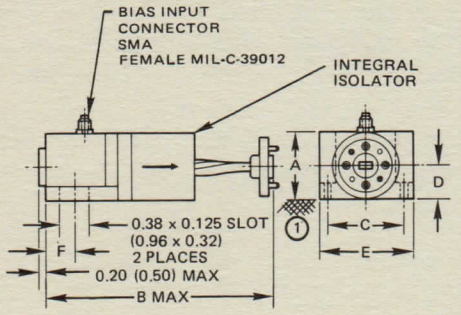

① THIS SURFACE MUST BE MOUNTED ON A CONDUCTIVE HEAT SINK TO MAINTAIN CAVITY AT 50°C MAX.

REGULATOR

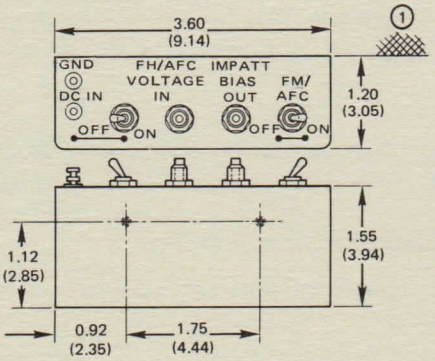

① THIS SURFACE MUST BE MOUNTED ON A CONDUCTIVE HEAT SINK TO MAINTAIN CHASSIS AT 50°C MAX

HOW TO ORDER (Center frequency to be specified at time of order)

CW IMPATT Source Model Number 4717**X**H-**X**O**XX**

Frequency Band
1:Ka
2:Q
3:U
4:V
5:E
6:W

Flange
1:Round
2:Square (Ka-band only)

Power Output
02:20 mW
05:50 mW
10:100 mW
20:200 mW

EXAMPLE: To order a W-Band CW IMPATT source, 100 mW power output and center frequency of 80 GHz, specify 47176H-1010.

Printed in U.S.A. 3/79 AL

HUGHES

HUGHES AIRCRAFT COMPANY

ELECTRON DYNAMICS DIVISION

SUPPLEMENTARY DATA TO TRANSMITTER PRODUCTS CATALOG*

PULSED IMPATT SOURCES

FEATURES

- 10 W at 35 GHz
- 5 W at 94 GHz
- Matched Modulator

DESCRIPTION

Hughes 4715XH series Pulsed IMPATT Sources consist of a temperature stabilized waveguide cavity IMPATT oscillator with an integral isolator, matched pulse modulator, and a special low-impedence interconnecting cable. These sources are available in Ka-(35 GHz), V-(60 GHz) and W-(94 GHz) Bands, with peak power outputs ranging from 10 Watts at 35 GHz to 5 Watts at 94 GHz.

Pulse widths can be specified between 50 and 100 nanoseconds with a maximum PRF of 100 KHz. Frequency variation during the pulse, (chirp bandwidth), must be specified at time of order and can be any value between 0.5 and 1.0 GHz. Power variation during pulse can be as low as ±1 dB at a chirp bandwidth of 1%. A modulator is provided and tuned with each source for the specific requirement.

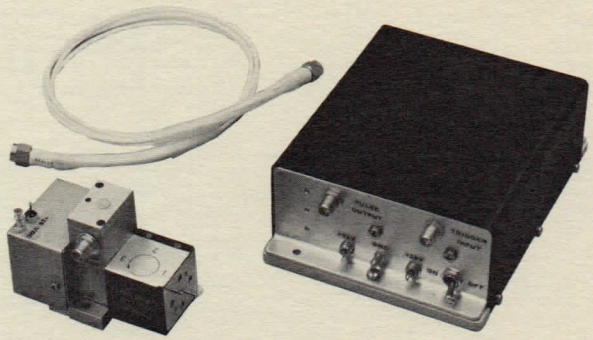

Additional options, such as the injection locked pulsed source shown in the picture, are available.

OTHER ELECTRICAL SPECIFICATIONS ①

PULSE WIDTH ② (nsec min/max)	50/100
PRF ② (KHz max)	100
CHIRP BANDWIDTH ② ③ (GHz min/max)	0.5/1.0
EFFICIENCY (% typ)	5.0
PEAK POWER OUTPUTS AVAILABLE ① (W, min)	
Ka BAND (34-36 GHz)	5.0 or 10
V BAND (58-62 GHz)	1.0
W BAND (92-96 GHz)	3.0 or 5.0
DC POWER REQUIREMENTS	
MODULATOR (V/mA max)	+70/100
TEMPERATURE CONTROLLER (V/A max)	+28/1.50
MODULATOR TRIGGER PULSE	+5 V TTL

① Consult factory for requirements not covered by these specifications.

② Operations frequency (0.15%) accuracy, pulse width, PRF and chirp bandwidth to be specified at time of order.

③ Peak power variation is a function of specified chirp bandwidth. Minimum variation of ± 1 dB occurs with a chirp bandwidth of 1%.

NOTE: Specifications apply at 25° Ambient Temperature.

*Data sheet supplements pages 4 and 5 of Transmitter Products Catalog

SUPPLEMENTARY DATA TO TRANSMITTER PRODUCTS CATALOG

PULSED IMPATT SOURCES

HUGHES

HUGHES AIRCRAFT COMPANY

ELECTRON DYNAMICS DIVISION

MECHANICAL SPECIFICATIONS

FREQUENCY BAND (GHz)		Ka (34-36)	V (58-62)	W (92-96)
DIMENSIONS (inches (cm))	A	1.47 (3.73)	1.21 (3.07)	1.21 (3.07)
	B	3.60 (9.14)	2.80 (7.11)	2.65 (6.73)
	C	1.88 (4.77)	1.56 (3.96)	1.56 (3.96)
	D	0.66 (1.67)	0.49 (1.24)	0.49 (1.24)
	E	1.56 (3.96)	1.25 (3.17)	1.25 (3.17)
	F	0.50 (1.27)	0.38 (0.96)	0.38 (0.96)
WAVEGUIDE SIZE ①		WR-28	WR-15	WR-10
WAVEGUIDE FLANGE ①		UG-381/U ② UG-599/U ③	UG-385/U	UG-387/U mod

① Refer to page 16 of Transmitter Products Catalog for specifications and MIL specification cross reference

② Round flange ③ Square flange

OUTLINE AND MOUNTING DRAWINGS

Pulsed IMPATT Sources

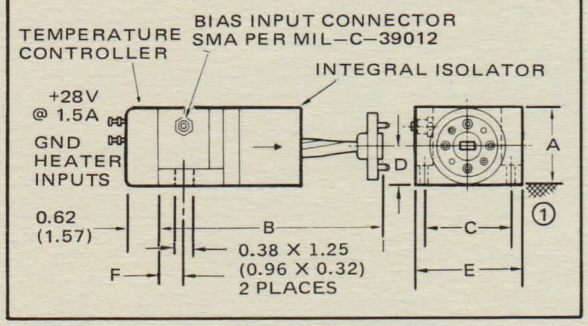

Bias Pulse Modulator

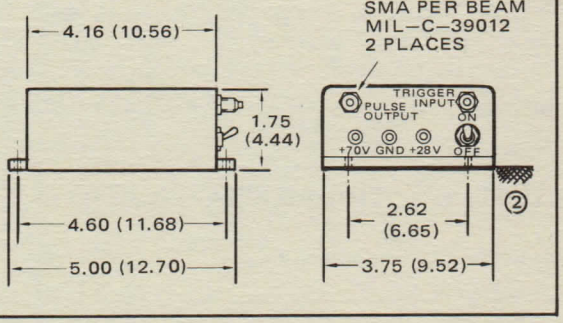

① Cavity temperature is preset at factory approximately 35°C.

Note: Special 24 inch (61.06 cm) low impedence cable furnished.

① Mounting surface to be thermally insulated.

② Heat sink this surface to maintain chassis at 50°C max.

HOW TO ORDER

Model Number* 4715XH-XOXX

Frequency Band	1: Ka 4: V 6: W
Flange Type	1: Round 2: Square (Ka-band only)
Power Output	11: 1 watt 31: 3 watts 51: 5 watts 12: 10 watts

EXAMPLE: TO ORDER A W-BAND PULSED IMPATT SOURCE WITH 5W PEAK POWER OUTPUT, SPECIFY 47156 H-1051

*Operating (0.15% accuracy), pulse width, PRF and chirp bandwidth to be specified at time of order.

Printed in U.S.A. 3/79 AL

HUGHES

HUGHES AIRCRAFT COMPANY

ELECTRON DYNAMICS DIVISION

SUPPLEMENTARY DATA TO TRANSMITTER PRODUCTS CATALOG* CW AND PULSED IMPATT DIODES

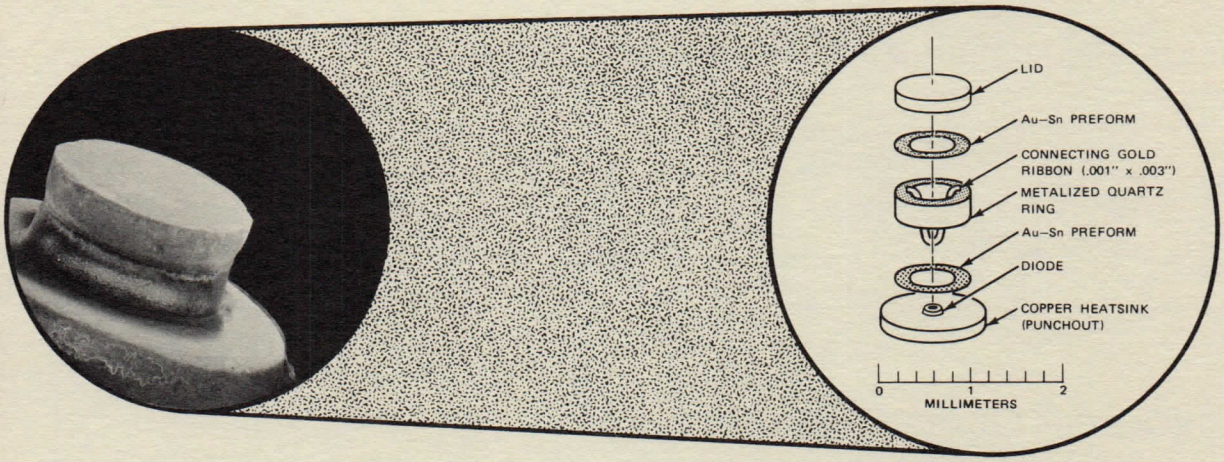

FEATURES

- 200 mW CW to 96 GHz
- 10 W Peak at 35 GHz
- 5 W Peak at 94 GHz

DESCRIPTION

Hughes Millimeter Wave IMPATT diodes are silicon single-drift (p^+nn^+) or double-drift (p^+pnn^+) diodes. They are mounted in sealed quartz or ceramic packages.

Similar diodes have undergone many years of accelerated life testing. This testing coupled with failure analysis and corrective measures have enabled Hughes to achieve very high predicted median-time before failure (MTBF) rates. The predicted MTBFs, as a function of diode operating junction temperature, are shown in figure 1.

All diodes are tested in a waveguide test cavity. They are supplied with data giving the measured power output, the test frequency, capacitance and dc bias input.

*Data sheet supplements pages 6 and 7 of Transmitter Products Catalog.

CW IMPATT DIODE SPECIFICATIONS

Test Circuit Waveguide Band (GHz)	Ka (26.5-40)	Q (33-50)	U (40-60)	V (50-75)	E (60-90)	W (75-96)
Power Outputs Available (mW min)	50,100,200	50,100,200	50,100,200	50,100,200	50,100,200	50,100,200
Operating Voltage Range (V)	26-50	20-42	18-38	16-34	14-32	10-28
Total Capacitance at V=0 (pf)	1.0-3.0	1.0-3.0	0.8-3.0	0.8-3.0	0.8-2.5	0.7-2.5
Package	Minidisc/ Quartz	Minidisc/ Quartz	Quartz	Quartz	Quartz	Quartz

*Tested at specified center frequency ±2.5%.

PULSE IMPATT DIODE SPECIFICATIONS

Test Circuit Waveguide Band	Ka	V	W
Peak Power Outputs Available (W, min)	5.0, 10	1.0	3.0, 5.0
Test Frequency Range (GHz)	34-36	58-62	92-96
Total Capacitance, V=0 (pf)	1.0-3.0	1.8-3.0	0.7-2.5
Package	Minidisc	Quartz	Quartz

APPLICATION NOTES

The thermal resistance of a given diode can be estimated from the curves in the Thermal Resistance graph (shown here for diodes on copper heat sink) using the breakdown voltage and capacitance information supplied with each diode ordered. The temperature rise of the diode can then be estimated by multiplying the thermal resistance by the dc input power to the diode. Adding the temperature rise to the case temperature of the diode heat sink will give the junction temperature for MTBF predictions from the Reliability graph.

In addition to RF and dc testing, all diodes are dc-burned in for 24 hours at 225°C junction temperature. Additional burn-in at higher temperature can be used for high reliability, e.g., 325°C for 48 hours.

The MINIDISC and Quartz packages have been previously soldered to a heat sink in order to be RF tested. To solder the diode to a heat sink, the heat sink must first be tinned with a small amount of lead-tin eutectic solder (63% Sn), e.g., a 0.035 inch diameter by 0.0015 inch thick preform, with a non-corrosive flux that can be cleaned off after soldering at 200-220°C. The package must be oriented so that the previously soldered side of the diode is adjacent to the heat sink. A small amount of mechanical scrubbing and pressure (less than 100 grams) may be used to produce a superior solder joint. A positive bias voltage should be applied to the nickel-plated side of the MINIDISC package or the small-diameter, gold-plated side of the Quartz package.

When applying bias to the diode, care should be taken to ensure protection against current transients by using a constant current supply and gradually increasing the voltage and current. Some transient-limiting circuit should be used when the diode is switched on and off directly. It is recommended that the diode be biased for power outputs that are less than the maximum values while tuning for optimum power.

SILICON IMPATT DIODES

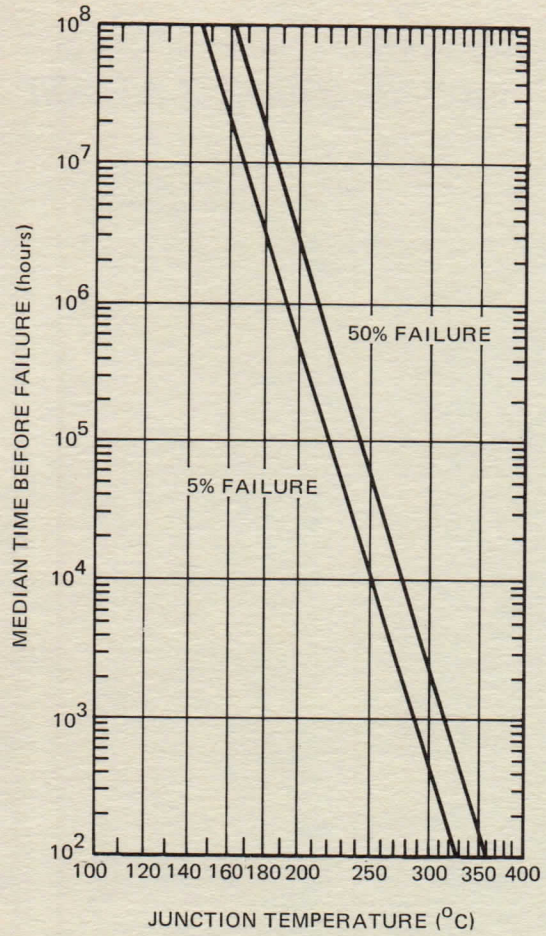

FIGURE 1. MTBF VS JUNCTION TEMPERATURE

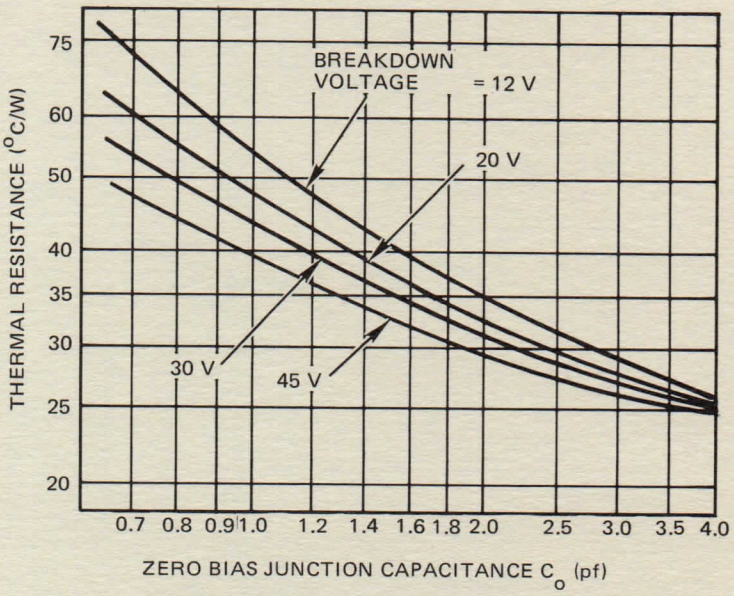

FIGURE 2. THERMAL RESISTANCE VS JUNCTION CAPACITANCE ON COPPER HEAT SINK

PACKAGE DIMENSIONS (INCHES (CM))

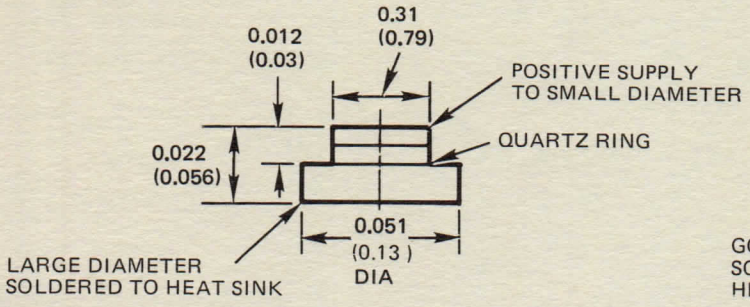

QUARTZ PACKAGE

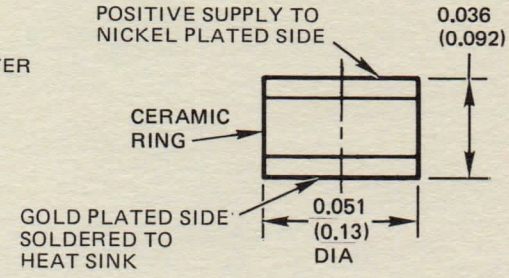

MINIDISC PACKAGE

SUPPLEMENTARY DATA TO TRANSMITTER PRODUCTS CATALOG
CW AND PULSED IMPATT DIODES

HUGHES

HUGHES AIRCRAFT COMPANY
ELECTRON DYNAMICS DIVISION

HOW TO ORDER

CW IMPATT Diode Model Number* 4717XH-OXXX

- Frequency Band: 1:Ka, 2:Q, 3:U, 4:V, 5:E, 6:W
- Package: 1: Quartz; 2: Minidisc (Ka-Band only)
- Power Output: 05:50 mW, 10:100 mW, 20:200 mW

EXAMPLE: To order a CW IMPATT diode at 94 GHz with 100 mW output power, specify 47176H-0110, center frequency 94 GHz.

*Specify center frequency at time of order.

Pulsed IMPATT Diode Model Number 4715XH-OXXX

- Frequency Band: 1:Ka, 2:Q, 3:U, 4:V, 5:E, 6:W
- Package: 1:Quartz; 2: Minidisc (Ka-Band only)
- Power Output: 11:1 watt, 31:3 watt, 51:5 watt, 12:10 watt

EXAMPLE: To order a pulsed IMPATT diode at 60 GHz with 1 Watt output power, specify 47154H-0111.

Printed in U.S.A. 3/79 AL

HUGHES

HUGHES AIRCRAFT COMPANY

ELECTRON DYNAMICS DIVISION

MILLIMETER–WAVE FULL BAND SOLID STATE SWEEP GENERATOR

FEATURES

- 26.5 GHz to 110 GHz
- 1% Frequency Linearity
- ±1.5 dB Power Leveling
- Computer Compatible

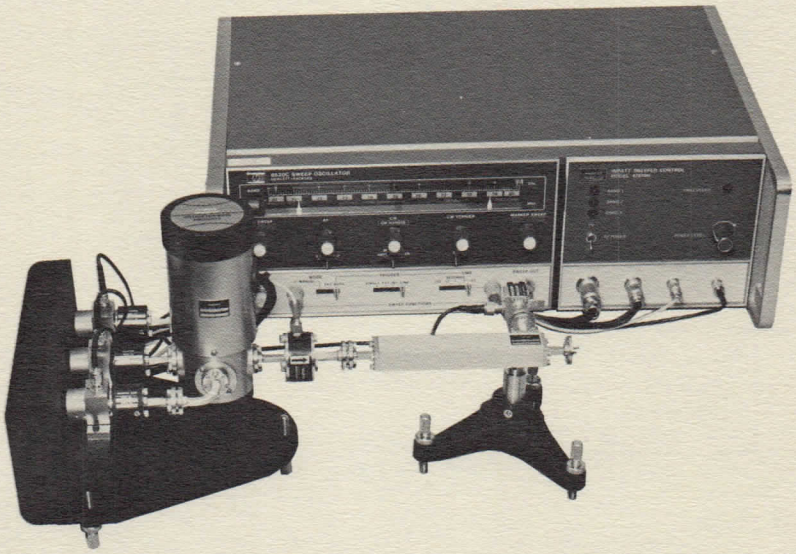

DESCRIPTION

The Hughes Model 4772XH series of Millimeter-wave Full Band Sweep Generators consist of a Hughes Model 4712XH Full Band Sweeper Source, a Hughes Model 4771XH series Leveling Loop, a Hughes Model 47610H Full Band Sweeper Plug-In and a Hughes Model 47560H Main Frame (Hewlett-Packard 8620C). The Hughes Full Band Sweeper Source consists of three Millimeter-wave Sweeper Sources (Model 410XXH series) and an electrically actuated waveguide switch. The leveling loop (similar to Model 4476XH series) consists of a Hughes Ferrite Modulator, Directional Coupler and Flat Broadband Detector. The full band sweeper plug-in contains all the controls necessary for the sweeper source and leveling loop.

The automatic feature of this Full Band sweep generator enables the user to select the frequency span of interest by using the band select switch located on the Hewlett-Packard Main Frame. The 1% frequency linearity makes data interpretation simple and accurate. The Full Band Sweep Generator may be ordered with the IEEE 488 bus compatibility option. This enables the user to configure an automated test station with full computer control.

MILLIMETER–WAVE FULL BAND SOLID STATE SWEEP GENERATOR

HUGHES

HUGHES AIRCRAFT COMPANY

ELECTRON DYNAMICS DIVISION

SPECIFICATIONS

Frequency Band	Ka	Q	U	V	E	W	W
Frequency Range (GHz)	26.5-40	33-50	40-60	50-75	60-90	75-100	90-110
Leveled Power Output (mW Min)	2	2	2	2	2	1	1
Flatness (±dB Max)	1.5	1.5	1.5	1.5	1.5	2.0	2.0
Linearity (% Typ)	1	1	1	1	1	1	1
Waveguide Size	WR-28	WR-22	WR-19	WR-15	WR-12	WR-10	WR-10
Waveguide Flange	UG-599/U[1] UG-381/U[2]	UG-383/U	UG-383/U mod	UG-385/U	UG-387/U	UG-387/U mod	UG-387/U mod
Model Numbers	47721H-X0X0	47722H-10X0	47723H-10X0	47724H-10X0	47725H-10X0	47726H-11X0	47726H-12X0

[1]Square Flange [2]Round Flange

BLOCK DIAGRAM

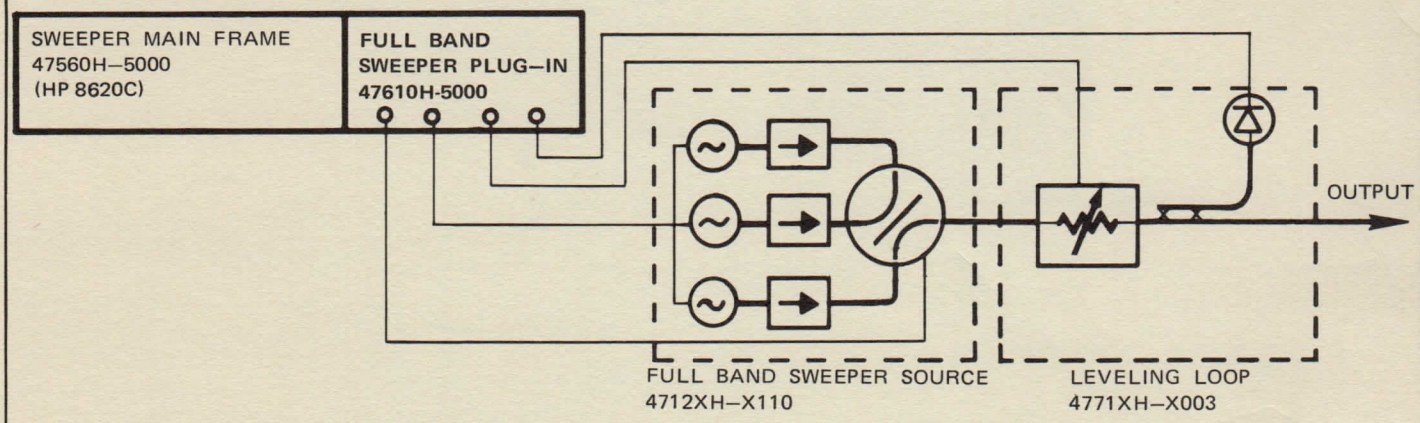

HOW TO ORDER

Hughes Plug-in, Full Band Oscillator and Leveling Loop:

Model No. 4772XH-XXX0

- Frequency Band: 1:Ka, 2:Q, 3:U, 4:V, 5:E, 6:W
- 0:Without Main Frame; 1:With Main Frame; 2:With Main Frame with IEEE Bus Compatibility Option
- 0:Bands Ka through E; 1:W-Band (75-100 GHz); 2:W-Band (90-110 GHz)
- Flange 1:Round; 2:Square (Ka band only)

EXAMPLE: To order a W-Band Sweeper (bus compatible) 90-110 GHz, specify a 47726H-1220

HUGHES AIRCRAFT COMPANY ELECTRON DYNAMICS DIVISION SOLID-STATE MICROWAVE PRODUCTS 3100 West Lomita Boulevard, Torrance, California 90509, Tel (213) 534-2121

Printed in U.S.A. 9/78

AL

HUGHES

HUGHES AIRCRAFT COMPANY

ELECTRON DYNAMICS DIVISION

Millimeter-Wave Plug-in Sweep Generator

FEATURES

- ALL SOLID-STATE
- 26.5 TO 110 GHz
- COMPACT LIGHTWEIGHT RF SOURCE
- COMPATIBLE WITH HEWLETT-PACKARD 8620A OR 8620B MAIN FRAME
- PLUG-IN DESIGN

DESCRIPTION

The Hughes Millimeter-wave Plug-in Sweep Generator converts the Hewlett-Packard 8620B Main Frame into an all solid-state, millimeter-wave sweep generator. A wide choice of sweep test systems in frequency bands from 26.5 GHz to 110 GHz are available. These test systems consist of a Hewlett-Packard Main Frame, a Hughes Main Frame Adapter, a Series of Hughes Silicon IMPATT Diode Source Plug-ins, Ferrite Modulator/Leveler Plug-ins, and external Hughes components such as Isolators, Couplers, and Detectors. Leveled and unleveled systems with and without the capability of 1 KHz modulation can be assembled to cover any 10 GHz bandwidth between 33 GHz and 90 GHz, 4 to 7.5 GHz bandwidths between 26.5 and 40 GHz, and 90 to 110 GHz in a set of sources. This enables the user to purchase a system that is most appropriate for his needs at the lowest possible cost. The Hewlett-Packard 8620B Main Frame may be purchased as a Hughes Model 44410H.

Main Frame Adapter

The Hughes Model 44415H Main-frame Adapter contains all the power supplies and interfaces necessary to adapt the Hughes Model 44410H (Hewlett-Packard 8620B) Main Frame to the Hughes Millimeter-wave Plug-ins. It accepts one IMPATT Plug-in with its associated source, and one Modulator/Leveler Plug-in with its associated modulator. A lighted push-button power switch for the IMPATT power supply is provided on the front panel of the adapter along with square-wave modulation controls for a Modulator/Leveler Plug-in and modulator.

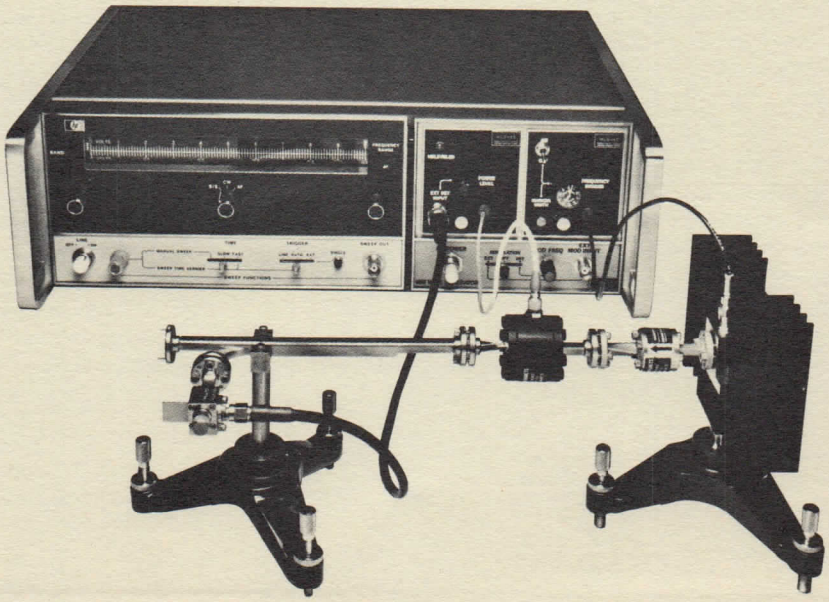

IMPATT Plug-in

The Hughes Model 44420H IMPATT Plug-in, when used with one of the Hughes Model 440XXH Series Sweeper Sources, provides millimeter-wave power across a 10 GHz bandwidth (4 to 7.5 GHz in the 26.5 to 40 GHz band). The Plug-in contains current-limiting circuitry for protection of the IMPATT diode in the Sweeper Source, and circuitry to enable swept operation to be controlled by the Main Frame. A ten-turn calibrated potentiometer on the front panel of the IMPATT Plug-in adjusts the position of a frequency marker. Another manual control adjusts the marker's width. This marker, however, functions only in conjunction with the Modulator/Leveler Plug-in.

NOTE: Each IMPATT Plug-in is specifically tuned at Hughes with the Hughes Sweeper Source which must be purchased at the same time. The Plug-in is connected to this source by a 36-inch (92 cm) flexible cable. The source is provided with a heat sink and stand allowing operation without the use of a fan.

Modulator/Leveler Plug-in

The Hughes Model 44425H Modulator/Leveler Plug-in, when used with one of the Hughes Model 447XXH Series of Ferrite Modulators, provides capability for 1 KHz square-wave modulation, a frequency marker, blanking, external square-wave modulation and leveling. Each Modulator/Leveler Plug-in is tuned with a Hughes RF Modulator which must be purchased concurrently. Together they will provide the above named functions for any number of sweeper sources operating in that waveguide band. The modulator is connected to the plug-in by a 36-inch (92 cm) cable. A detector-input connector for leveling, power-level controls, and a leveling light indicating the leveled condition, are all on the front panel of the Modulator/Leveler Plug-in. The selector switch for external or internal square-wave modulation, a control to vary the internal modulation from 950 Hz to 1050 Hz, and an input jack for external modulation are all provided on the front panel of the Hughes Model 44415H Main Frame Adapter.

OPERATION

Sweep Functions

The sweep function controls for the Hughes Millimeter-wave Sweep Generator are provided by the Hughes Model 44410H (Hewlett-Packard 8620B) Main Frame. The functions are:

Start/Stop Sweep: Sweeps from adjustable start to stop frequency settings.

Sweepband: Both start and stop settings are continuously and independently adjustable over the entire frequency range of the sweeper source and can be set to sweep either up or down in frequency.

ΔF Sweep: Sweeps symmetrically about a frequency centered by the START/CW frequency setting knob.

ΔF: Continuously adjustable from zero to 10% of the usable frequency band. ΔF width is controlled by STOP/ΔF setting.

CW Operation: Single-frequency RF output is selected by the function switch at the center of the front panel. Frequency is controlled by START/CW knob.

Pre-Set Frequencies: Start and stop sweep-end points can be used as two pre-set CW frequencies in the manual sweep mode.

Sweep Modes

The sweep modes on the Hughes Millimeter-wave Sweep Generator are provided by the Hughes Model 44410H (Hewlett-Packard 8620B) Main Frame. The modes are:

Auto: Sweep recurrs automatically.

Line: Sweep is synchronized with the ac power line for power line frequencies of up to 60 Hz.

External: Sweep is actuated by externally applied signal +2V peak, ½ μs pulse width and 1.0 MHz repetition rate. This signal is applied to the external trigger input on the rear panel. Sweep-time is determined by SWEEP-TIME RANGE switch and SWEEP-TIME VERNIER control.

Single Sweep: Activated by a front panel push-button (to right of TRIGGER SELECT switch). Sweep time is determined by SWEEP-TIME RANGE switch and SWEEP-TIME VERNIER control.

Sweep Time: Continuously adjustable in two ranges —fast and slow. VERNIER FAST or SLOW control is to the left of the TIME SELECT switch.
Fast: Typically 0.01 to 0.35 seconds/sweep.
Slow: Typically 1 to 60 seconds/sweep.

Manual Sweep: Front panel control provides continuous manual adjustment of frequency between the end frequencies set by the START/STOP knobs.

Sweep Output: Direct-coupled sawtooth, zero to approximately +10V, concurrent with swept RF output. Source impedance is approximately 10,000 ohms.

AM Modulation

Internal: Square-wave modulation is tunable between 950 Hz and 1050 Hz by a knob on the front panel of the Hughes Model 44415H Main Frame Adapter. It functions with all sweep modes. RF modulation is achieved by biasing the Ferrite Modulator associated with the Modulator/Leveler Plug-in alternatively between its low insertion loss and high insertion loss states. The on/off ratio is 20 dB minimum on all Hughes Ferrite Modulators.

External: An input jack for application of external modulation voltage for switching rates up to 50 KHz is provided on the front panel of the Hughes Model 44415H Main Frame Adapter. An external voltage of -10 to -40 volts will switch the Ferrite Modulator to its high insertion loss state.

Frequency Marker

Frequency marker capability is provided with those Hughes sweep test systems which incorporate a Modulator/Leveler Plug-in and associated modulator. The RF mark is an amplitude-modulated dip in RF power and can be disabled by means of a toggle switch on the front panel of the IMPATT Plug-in. The frequency position of the marker is controlled by a calibrated ten-turn potentiometer and the width of the marker is controlled by a single-turn potentiometer also on the front panel of the IMPATT Plug-in.

Power Leveling

Power leveling is accomplished by varying the insertion loss characteristic of the modulator controlled by the Modulator/Leveler Plug-in. A Hughes Model 447XXH Series Modulator, a Hughes Model 4434XH-310 Series 10 dB Coupler, and a Hughes Model 448XXH Series Broadband Detector form an external leveling loop. A dc amplifier in the Modulator/Leveler Plug-in amplifies the difference between the output of the detector and a reference voltage and biases the modulator to a higher insertion loss. This insertion-loss state is controlled by the LEVEL SET knob which establishes the degree of leveling.

RF Blanking

RF blanking may be applied by using the switch on the rear panel of the Hughes Model 44410H (Hewlett-Packard 8620B) Main Frame. In this mode the RF is automatically attenuated during retrace of the sweep and turned on after completion of retrace. The Modulator/Leveler Plug-in uses the blanking pulse from the Main Frame to switch the modulator into its high insertion loss state (greater than 20 dB of attenuation).

Display and Negative Blanking Outputs

Direct-coupled rectangular pulses of approximately +5V (display blanking) and -5V (negative blanking) into 2500 ohms are available at rear-panel Z-AXIS/MKR/PEN LIFT and NEGATIVE BLANKING connectors, respectively. Both pulses are coincident with RF blanking.

Pen Lift

For use with X-Y graphic recorders. The pen lift functions with display blanking output disabled and with the center conductor of rear-panel Z-AXIS/MKR/PEN LIFT connector shorted to the pen lift common (outer case of connector) during sweep and open during retrace. It is available only on slow sweep speed.

SWEEP TEST SYSTEM SPECIFICATIONS

The following system listings define the Hughes millimeter-wave sweep test systems and list their features. System specifications are listed in Table 1. Each RF component part of the test systems is fully specified on separate data sheets. These systems may at any time be upgraded to the next system by adding the additional components necessary. When these components are purchased at the same time, they will be tested by Hughes to operate as a system.

System I – Basic Sweep System

- Plug-in Solid State Sweeper Sources from 26.5 to 110 GHz
- RF sweep operates into load VSWR's of less than 5:1 (sweeper source contains integral isolator)
- START/STOP sweep function
- Adjustable ΔF sweep function
- Manually adjustable CW operation
- Automatic, line, triggered, and manual sweep modes
- Fast and slow sweep speeds with vernier speed adjustment
- Pen lift voltages for X-Y graphic recorders

Hughes Components:

1. One Hughes Model 44410H (Hewlett-Packard 8620A or 8620B) Main Frame
2. One Hughes Model 44415H Main-Frame Adapter
3. As many Hughes Model 440XXH Series Sweeper Sources as desired
4. One Hughes Model 44420H IMPATT Plug-in for each sweeper source

System II – Modulated Swept System

Features

- All the features listed for System I plus –
- Internal square-wave modulation adjustable from 950 to 1050 KHz
- Frequency marker with calibrated positioner
- Blanking of sweep retrace
- External ON/OFF modulation

Hughes Components:

1. One Hughes Model 44410H (Hewlett-Packard 8620A or 8620B) Main Frame
2. One Hughes Model 44415H Main Frame Adapter
3. As many Hughes Model 440XXH Series Sweeper Sources as desired
4. One Hughes Model 44420H IMPATT Plug-in for each Source
5. One Hughes Model 447XXH Series Modulators for each waveguide band
6. One Hughes Model 44425H Modulator/Leveler Plug-in for each modulator

System III – Leveled Swept System

Features

- All features for Systems I and II plus –
- Power leveling

Hughes Components:

1. One Hughes Model 44410H (Hewlett-Packard 8620A or 8620B) Main Frame
2. One Hughes Model 44415H Main Frame Adapter
3. As Many Hughes Model 440XXH Series Sweeper Sources as desired
4. One Hughes Model 44420H IMPATT Plug-in for each source
5. One Hughes Model 447XXH Series Modulator for each waveguide band
6. One Hughes Model 44425H Modulator/Leveler Plug-in for each modulator
7. One Hughes Model 4434XH-310 Series Coupler for each waveguide band
8. One Hughes Model 448XXH Broadband Detector for each sweeper source

BLOCK DIAGRAM FOR SYSTEM III

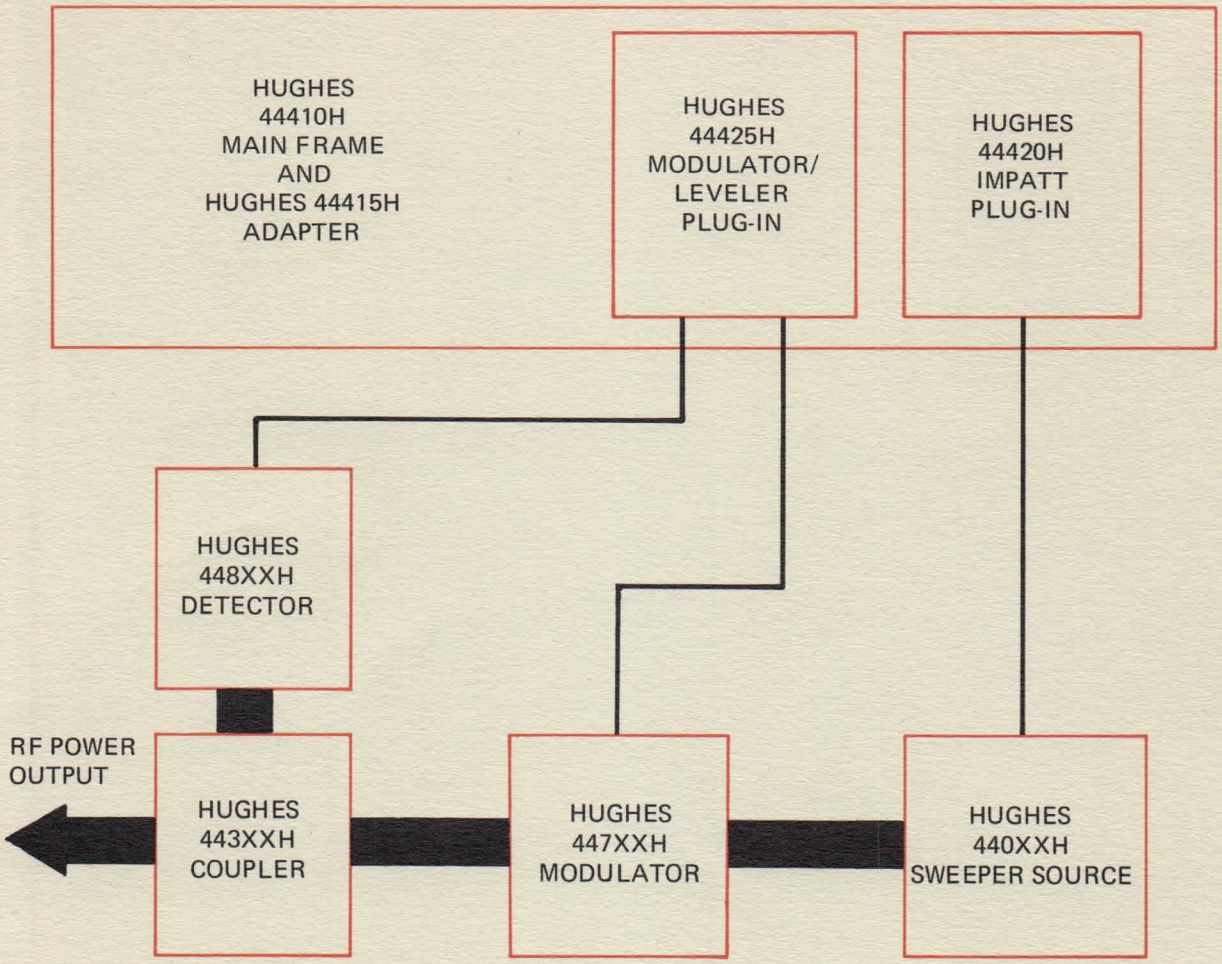

TABLE I. HUGHES RF COMPONENT MODEL NUMBER AND SYSTEM POWER LEVEL PER WAVEGUIDE BAND

Frequency Band (GHz)	Sweeper Source (bandwidth GHz)	Modulator	Coupler	Detector (bandwidth GHz)	Minimum Power Output (mW)		Minimum Flatness for System III (dB)
					System I	System II & III	
26.5–40	41011H (7.5)	44712H	44341H–310	44820H (13.5)	2	1	± 1.5
32–40	44056H (4)	44712H	44341H–310	44820H (13.5)	2	1	± 1.5
33–50	41021H (10)	44718H	44342H–310	44812H (10)	2	1	± 1.5
				44821H (17)	2	1	± 1.5
40–60	44066H (10)	44713H	44343H–310	44808H (10)	2	1	± 1.5
				44822H (20)	2	1	± 1.5
50–75	44096H (10)	44705H	44344H–310	44802H (10)	2	1	± 1.5
				44823H (25)	2	1	± 1.5
60–90	44076H (10)	44714H	44345H–310	44809H (10)	2	1	± 2.0
				44824H (30)	2	1	± 2.0
75–110	41061H (10)	44715H	44346H–310	44810H (10)	1	1/2	± 2.0
				44825H (35)	1	1/2	± 2.0

NOTE: For component specifications see catalog data sheets.

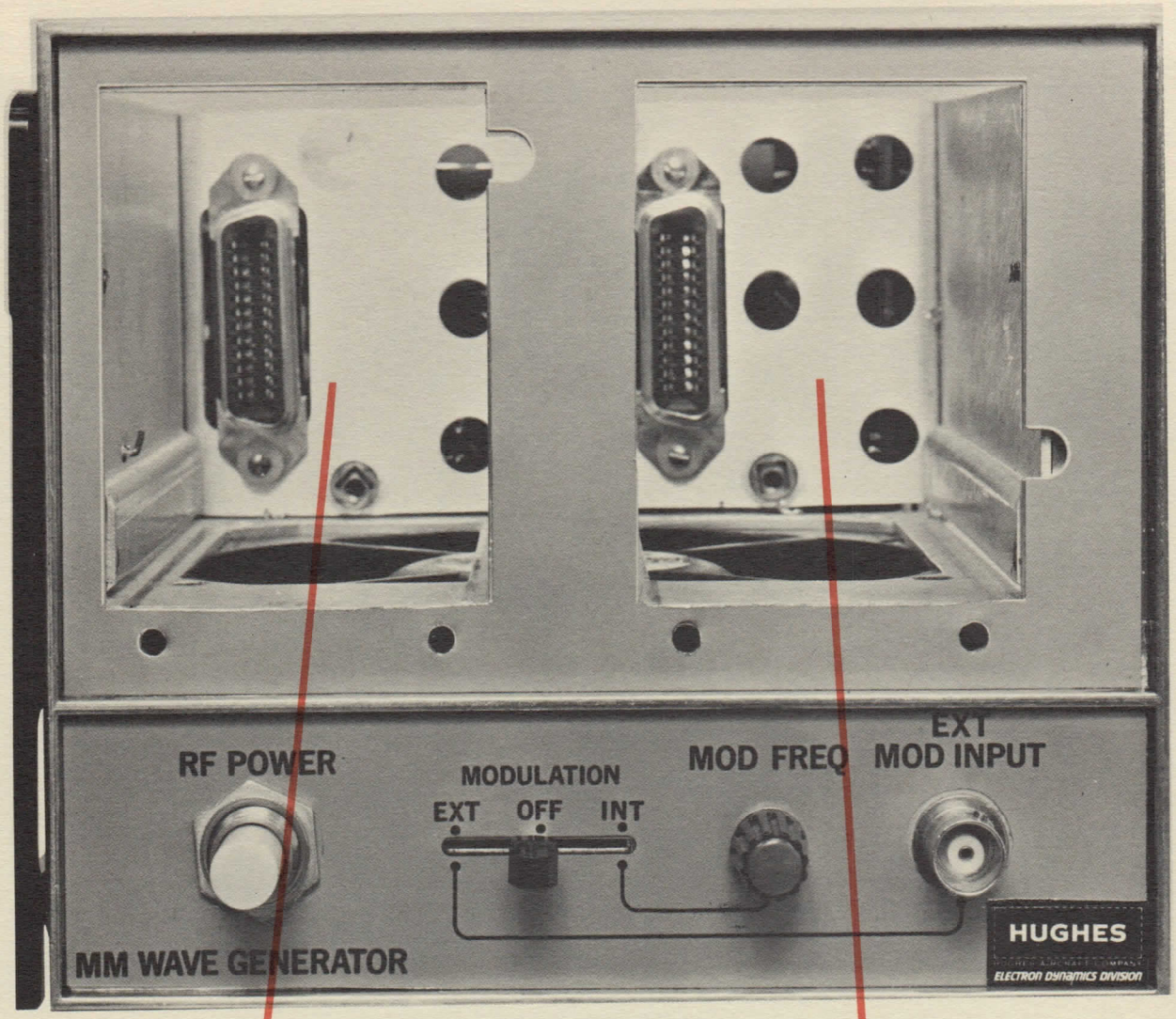

MODEL 44415H
MAIN FRAME ADAPTOR

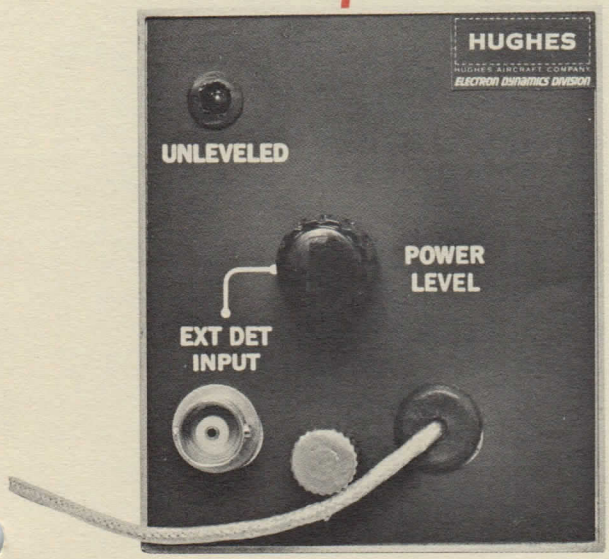

MODEL 44425H
MODULATOR/LEVELER PLUG-IN

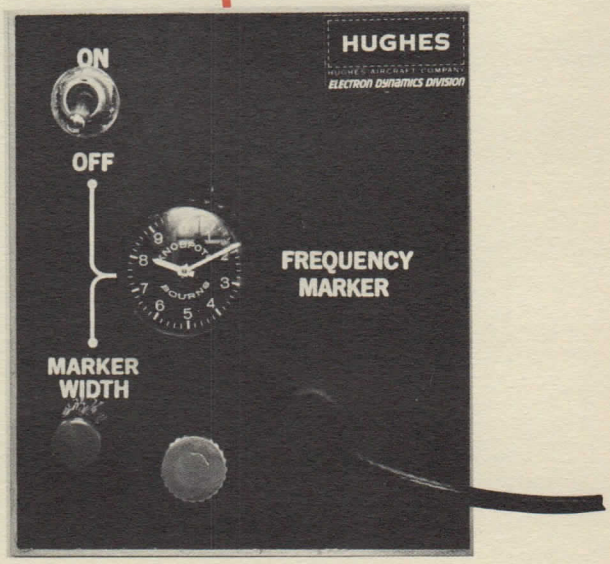

MODEL 44420H
IMPATT PLUG-IN

Millimeter-Wave Plug-in Sweep Generator

HUGHES
HUGHES AIRCRAFT COMPANY
ELECTRON DYNAMICS DIVISION

HUGHES MODEL 44410H (HEWLETT-PACKARD 8620B) MAIN FRAME SPECIFICATIONS

Power requirements . . . . . 115 or 230 V ±10%, 50 to 400 Hz, approximately 140 W
Dimensions . . . . . 5¼ in. (133, 4 mm) high, 11 in. (279, 4 mm) deep, 16¾ in. (425, 5 mm) wide. Rack mounting supplied with unit.
Weight (not including Hughes Plug-ins or Adapters) . . . . . Net 25 pounds (11, 5 Kg)

HUGHES MODEL 44415H MAIN FRAME ADAPTER SPECIFICATIONS

Power requirements . . . . . 50 W (approximately)
Voltage and frequency requirements
- 44415H . . . . . 115 V ±10%, 60 Hz
- 44415H-220 . . . . . 220 V ±10%, 50 Hz
- 44415H-100 . . . . . 100 V ±10%, 50 Hz

Weight (without plug-ins) . . . . . 7.75 pounds (3.52 Kg)
Size . . . . . Plugs into any Hughes Model 44410H (Hewlett-Packard 8620B) Main Frame

HUGHES MODEL 44420H IMPATT PLUG-IN SPECIFICATIONS

Current stability with ±10% line voltage fluctuations 0.1%
Frequency Scale calibration accuracy 1%
Marker repeatibility (of indicated frequency)* . . . . . 0.2% of full scale
Weight . . . . . 0.63 pounds (0.28 Kg)

HUGHES MODEL 44425H MODULATOR/LEVELER PLUG-IN SPECIFICATIONS

Internal square-wave modulation frequency . . . . . 950 to 1050 Hz
Switching voltage for external modulation . . . . . -10 to -40 V
Weight . . . . . 0.68 pounds (0.31 Kg)

*Operable only with a Hughes Model 44425H Modulator Plug-in and a Hughes Model 447XXH Series Modulator. The Frequency marker dial reading calibration is provided by the frequency scale supplied with the particular IMPATT Plug-in.

YOUR LOCAL HUGHES REPRESENTATIVE

HUGHES
HUGHES AIRCRAFT COMPANY
ELECTRON DYNAMICS DIVISION SOLID-STATE MICROWAVE PRODUCTS 3100 West Lomita Boulevard, Torrance, California 90509, Tel (213) 534-2121

Printed in U.S.A. 8-75

HUGHES

HUGHES AIRCRAFT COMPANY

ELECTRON DYNAMICS DIVISION

MILLIMETER-WAVE SWEEPER SOURCES

FEATURES

- All Solid State
- 26.5–110 GHz
- Proven Reliability
- Selectable Center Frequencies
- Compact Size and Lightweight

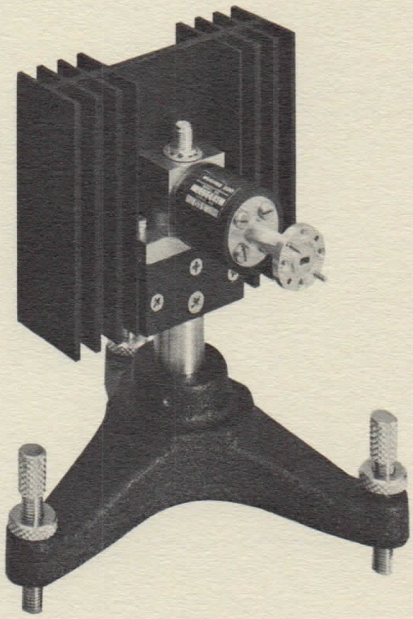

SWEEPER SOURCES DESCRIPTION

The Hughes 410XXH series of electrically tunable Millimeter-Wave Sweeper Sources are IMPATT Diode Oscillators capable of being bias tuned over any 8-10 GHz bandwidth between 40 and 90 GHz. Below 40 GHz 6 GHz bandwidth is offered. In the area of 90 GHz to 110 GHz a series of 3 sources is available covering the 20 GHz bandwidth.

The sources consist of an IMPATT diode mounted in a waveguide cavity. The frequency of operation is determined by the diode and cavity parameters. A sawtooth current waveform superimposed on a dc bias current tunes the diode through its sweep bandwidth.

The IMPATT oscillator is supplied mounted to an adjustable stand that serves as a heat sink and keeps the temperature rise of the oscillator within allowable limits without the use of a fan. The stand and heat sink is supplied attached to each source purchased.

Each Hughes sweeper source is supplied with an integral Faraday rotation type isolator which assures that loads with lower than 5:1 VSWR's will not cause instabilities or spurious responses in the IMPATT source. Each source is examined by observing a wavemeter dip on an oscilloscope display as it is tuned over the entire waveguide band.

Several sources may be ordered as a group to give complete waveguide bandwidth coverage at a substantial reduction in cost. In this case the frequency and bandwidth of each individual source is not specified but total performance across the entire waveguide bandwidth is guaranteed. Some overlap is automatically provided at lower than the in-band minimum power output.

These sources may be operated by either a Hughes Model 44017H Sweeper Control Unit or an IMPATT Plug-In Model 44420H to the Hughes Millimeter-Wave Plug-In Sweep Generator. The sweeper control unit, Model 44017H, can be used to operate any swept source. The IMPATT plug-in is factory adjusted for operation with a separately ordered specific sweeper source. Both of these supplies provide current protection for the IMPATT sources.

SOLID STATE SWEEPER SOURCES SPECIFICATIONS AS OPERATED BY THE HUGHES 44017H SWEEPER CONTROL UNIT OR THE HUGHES MODEL 44420H IMPATT PLUG-IN

Frequency Band	Ka	Q	U	V	E	W	W
Frequency Range (GHz)	26.5–40	33–50	40–60	50–75	60–90	75–100	100-110
Model Numbers	41011HA	41021HA	41031HA	41041H	41051H	41061H	41061H
Sweep Bandwidth (Specify Center Frequency) (GHz min)	6	8	8	10	10	10	5
Power Output (mW min)	2	2	2	2	2	1	1
Incidental FM (MHz typ)	1	1.5	1.5	2	2	2.5	2.5
Temperature Stability (At Constant Current) (MHz/^{o}C typ)	5	8	8	10	12	14	14
Electronic Tuning (MHz/MA typ)	40	50	50	50	50	50	50
Waveguide Size	WR-28	WR-22	WR-19	WR-15	WR-12	WR-10	WR-10
Flange	UG-599/U (1)	UG-383/U	UG-383/U (mod)	UG-385/U	UG-387/U	UG-387/U (mod)	UG-387/U (mod)

NOTES: A) Specifications on data sheet in effect at time of order will prevail.

B) When used with Hughes heat-sink stand the operating ambient temperature is +15 to +35°C. The operating temperature range of the cavity is +15 to +50°C.

(1) UG-381/U available upon request.

FULL WAVEGUIDE BANDWIDTH COVERAGE OPTIONS

Waveguide Bandwidth Covered by Group (GHz)	Group Model Numbers	Number of Sources for Coverage	Model Number of Group Sources
26.5–40	41011H-010	3	41011H-011 Low Band 41011H-012 Mid Band 41011H-013 High Band
33–50	41021H-010	3	41021H-001 Low Band 41021H-012 Mid Band 41021H-013 High Band
40–60	41031H-010	3	41031H-011 Low Band 41031H-012 Mid Band 41031H-013 High Band
50–75	41041H-010	3	41041H-011 Low Band 41041H-012 Mid Band 41041H-013 High Band
60–90	41051H-010	3	41051H-011 Low Band 41051H-012 Mid Band 41051H-013 High Band
75–100	41061H-010	3	41061H-011 Low Band 41061H-012 Mid Band 41061H-013 High Band
90–110	41061H-015	3	41061H-016 Low Band 41061H-017 Mid Band 41061H-018 High Band

NOTES: 1) For full waveguide bandwidth coverage only total frequency performance is guaranteed. Bandwidth of each source within the group is not specific.

2) Other specifications are the same as listed above under basic model numbers.

TYPICAL*PERFORMANCE CURVE FOR HUGHES SWEEPER SOURCES MODELS IN 410XXH SERIES

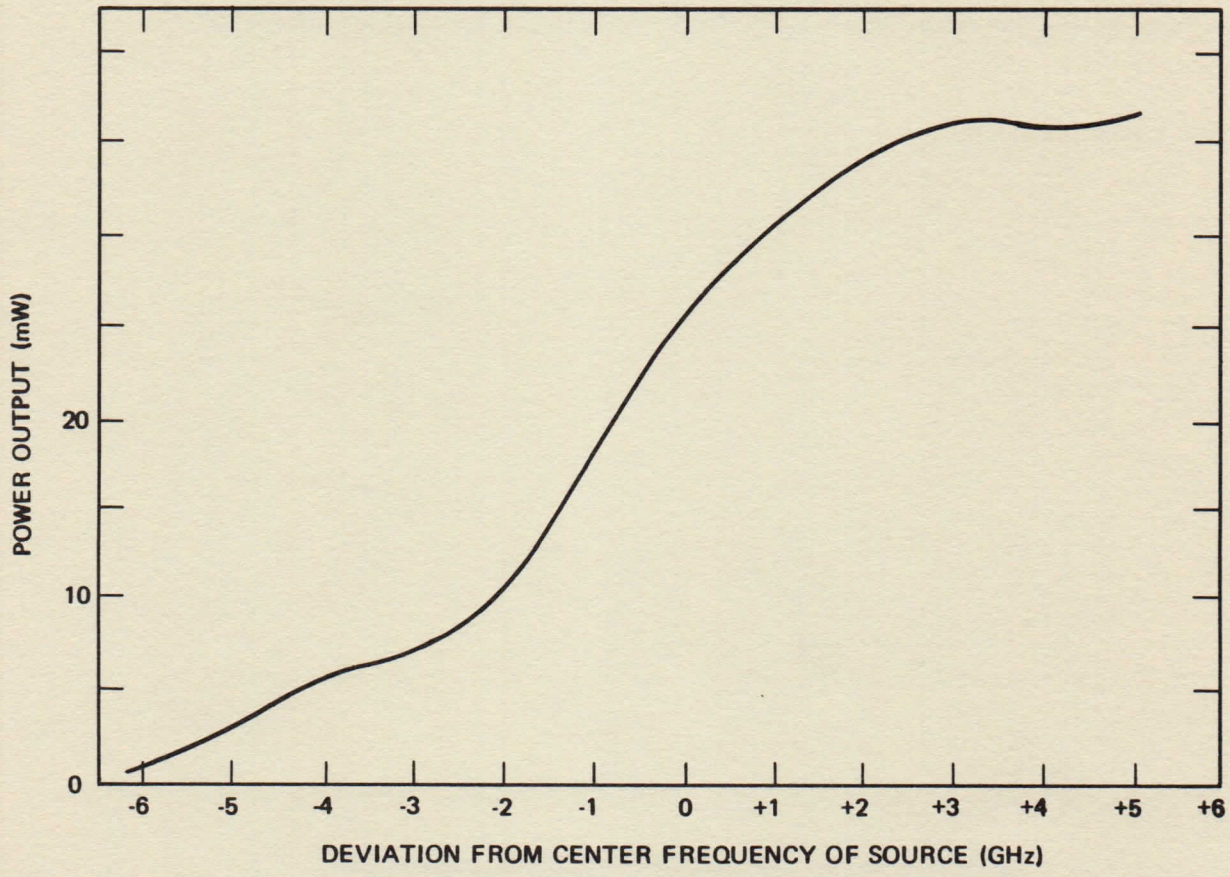

*NOTE: There can be a wide variation in performance from one source to another with respect to power output vs frequency.

MILLIMETER-WAVE SWEEPER SOURCES

HUGHES

HUGHES AIRCRAFT COMPANY

ELECTRON DYNAMICS DIVISION

YOUR LOCAL REPRESENTATIVE

HUGHES
HUGHES AIRCRAFT COMPANY
ELECTRON DYNAMICS DIVISION 3100 West Lomita Boulevard, Torrance, California 90509, Tel (213) 534-2121

Printed in USA 9/78

AL

HUGHES

HUGHES AIRCRAFT COMPANY

ELECTRON DYNAMICS DIVISION

ELECTRONIC SWEEPER CONTROL UNIT

MODEL 44017H SWEEPER CONTROL UNIT DESCRIPTION

The Model 44017H sweeper control unit, when combined with any of the Hughes IMPATT diode sweeper sources, provides a very economical sweep generator. This control unit can be used with any of the sweeper sources and provides a means of current biasing these sources for CW or swept operation. The source is connected to the control unit by a 36 inch flexible cable and diode protection circuit which is supplied at no charge with the purchase of each source.

The 44017H provides an adjustable dc bias current to the IMPATT diode cavity. The bias current can either be varied manually by the ten-turn potentiometer on the front panel of the instrument labeled "Min. Frequency Adjust" or electronically by a voltage sawtooth that is supplied externally. The amount of sweep bandwidth provided by the sawtooth is variable by means of another ten-turn potentiometer labeled "Frequency Adjust".

ELECTRONIC SWEEPER CONTROL UNIT

HUGHES

HUGHES AIRCRAFT COMPANY

ELECTRON DYNAMICS DIVISION

SPECIFICATIONS*

Sawtooth Input Voltage	15 to 25 V Peak
Sawtooth Input Current	1 mA maximum
Power Input	30 W maximum
Model 44017H	115 V, 50 Hz
Model 44017H-220	220 V, 50 Hz
Model 44017H-100	100 V, 50 Hz
Power Output	0-5 Vdc, 0-400 mA dc
Current Stability with Temperature**	0.6 mA/^{o}C typical
Current Stability with Respect to Line Voltage Fluctuations	1.2 mA maximum for a 10% change in line voltage

OUTLINE DRAWING

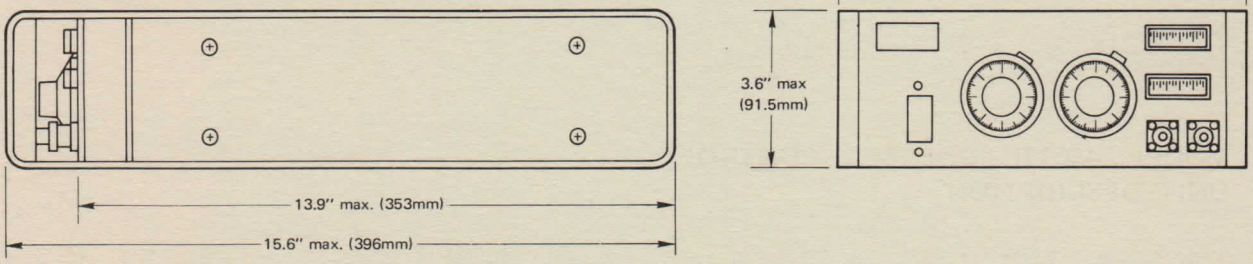

YOUR LOCAL REPRESENTATIVE

*All specifications on data sheet in effect at time of order will prevail.

**When operating with diode cavity or equivalent load.

HUGHES AIRCRAFT COMPANY ELECTRON DYNAMICS DIVISION SOLID-STATE MICROWAVE PRODUCTS 3100 West Lomita Boulevard, Torrance, California 90509, Tel (213) 534-2121

Printed in U.S.A. 12-75

HUGHES

HUGHES AIRCRAFT COMPANY

ELECTRON DYNAMICS DIVISION

MILLIMETER-WAVE MODULATORS AND SUPPLIES

FEATURES

- Full Waveguide Bandwidth, 26.5 – 110 GHz
- 20 dB ON/OFF Ratio
- Low Insertion Loss
- High Isolation

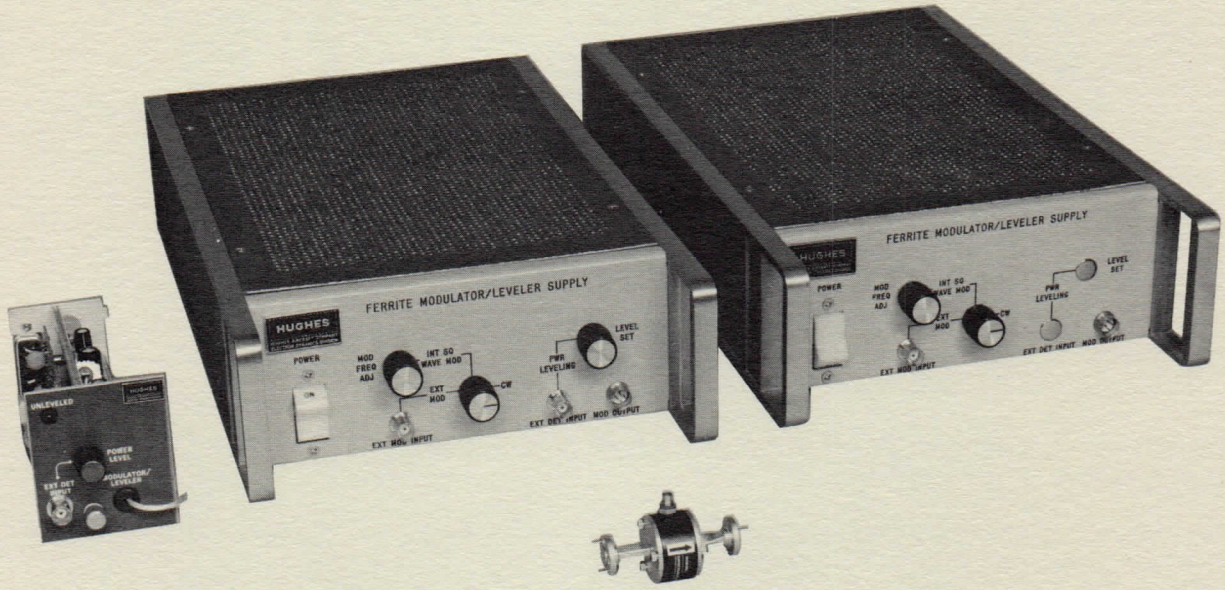

MODULATOR DESCRIPTION

These Hughes millimeter-wave ferrite modulators cover full waveguide bands in the range from 26.5 to 110 GHz. The modulators were designed for use with Hughes modulator/leveler power supplies and plug-ins, but can be used with customer power supplies for a wide variety of custom applications.

The modulators utilize the Faraday-rotation principle and consist of a section of waveguide containing a low loss ferrite material, matching elements, and resistive cards. The biasing-magnetic field is applied by passing current through a center-tapped solenoid surrounding the ferrite element. Current through one arm of the solenoid biases the ferrite for minimum insertion loss, and current through the other arm biases the ferrite for maximum insertion loss. When biased to its lowest insertion loss state, the modulator acts as an isolator, providing 20 dB minimum isolation.

The companion modulator/leveler supply, Hughes Model 44711H, or the modulator/leveler plug-in, Hughes Model 44425H, provide many useful functions. 1000 Hz square-wave modulation is provided for use with all 1000 Hz test equipment and is tunable from 950 to 1050 Hz. A CW operation mode biases the modulator to its lowest loss state for use as an isolator. External modulation may be applied to switch the modulator between its high and low insertion loss states. Power leveling is provided by using the modulator and supply as part of an external leveling loop. A Hughes coupler and detector are required to complete the loop.

A modulator supply, Hughes Model 44707H, is also available performing all of the functions of the 44711H, but without leveling.

MILLIMETER-WAVE MODULATORS AND SUPPLIES

HUGHES

HUGHES AIRCRAFT COMPANY

ELECTRON DYNAMICS DIVISION

SPECIFICATIONS* (at 25 ±10°C)

Frequency Band		Ka	Q	U	V	E	W
Frequency Range (GHz)		26.5-40	33-50	40-60	50-75	60-90	75-110
Forward Insertion Loss							
Low State (dB maximum)		1.5	1.5	1.8	1.8	2.0	2.5
High State (dB minimum)		22	22	22	22	22	22
Isolation at Low Insertion Loss State (dB minimum)		20	20	20	20	20	20
Rise Time ① (90%, μsec maximum)		50	50	50	50	50	50
Input and Output VSWR (maximum)		1.5:1	1.5:1	1.5:1	1.5:1	1.5:1	1.5:1
Bias Current (mA maximum)		500	500	500	500	500	500
Coil Resistance (Ω typical)		12	12	12	5.0	4.5	4.0
Coil Inductance (μH typical)		600	600	600	300	300	250
Waveguide Size		WR-28	WR-22	WR-19	WR-15	WR-12	WR-10
Flanges ②		UG-599/U ③	UG-383/U	UG-383/U (mod.)	UG-385/U	UG-387/U	UG-387/U (mod.)
Dimensions (maximum) (refer to outline drawing)	A	3.50" (89 mm)	3.50" (89 mm)	3.40" (87 mm)	2.70" (69 mm)	2.70" (69 mm)	2.70" (69 mm)
	B	1.90" (49 mm)	1.90" (49 mm)	1.90" (49 mm)	1.40" (36 mm)	1.40" (36 mm)	1.40" (36 mm)
Model Numbers		**44712H**	**44718H**	**44713H**	**44705H**	**44714H**	**44715H**

①When driven by a 44707H or 44711H supply or plug-in model 44425H.

②Special flanges available upon request.

③Also available with UG-381/U flange. (Add -100 to model number.)

MODULATOR SUPPLY SPECIFICATIONS* FOR MODELS 44711H, 44707H AND 44425H (at 25 ±10°C)

Square-Wave Modulation Frequency (tunable) . . . . . 950 to 1050 Hz

Switching Voltage for External Modulation . . . . . -10 to -40 V

ac Input Voltages

Models **44707H** and **44711H** . . . . . 110 V, 60 Hz

Models **44707H-220** and **44711H-220** . . . . . 220 V, 50 Hz

Models **44707H-100** and **44711H-100** . . . . . 100 V, 50 Hz

Size . . . . . 3.6" (91.5 mm) X 9.4" (239 mm) X 15.6" (396 mm)

Weight (approximate) . . . . . 12 pounds (5.44 kg)

* Specifications on the data sheet in effect at time of order will prevail.

TYPICAL INSERTION LOSS VS. CURRENT

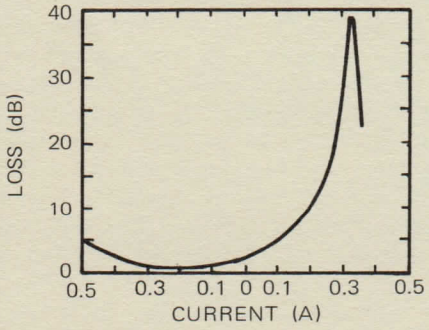

Your Local Representative

OUTLINE DRAWING

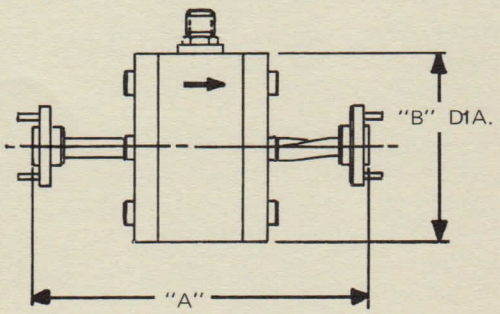

Note: The dc connector for all modulator models is Microtech Miniature DR-4S-6 and mates with DP-4S-1.

ALL DIMENSIONS ARE TYPICAL.

HUGHES HUGHES AIRCRAFT COMPANY ELECTRON DYNAMICS DIVISION SOLID-STATE MICROWAVE PRODUCTS 3100 West Lomita Boulevard, Torrance, California 90509, Tel (213) 534-2121

Printed in U.S.A. 9-75

HUGHES

HUGHES AIRCRAFT COMPANY

ELECTRON DYNAMICS DIVISION

MILLIMETER-WAVE LEVELING LOOPS

FEATURES

- Either 10 GHz or Full Waveguide Bandwidth Leveling
- Source Output Leveled to Within 3 dB
- 950 to 1050 Hz Square Wave Modulation

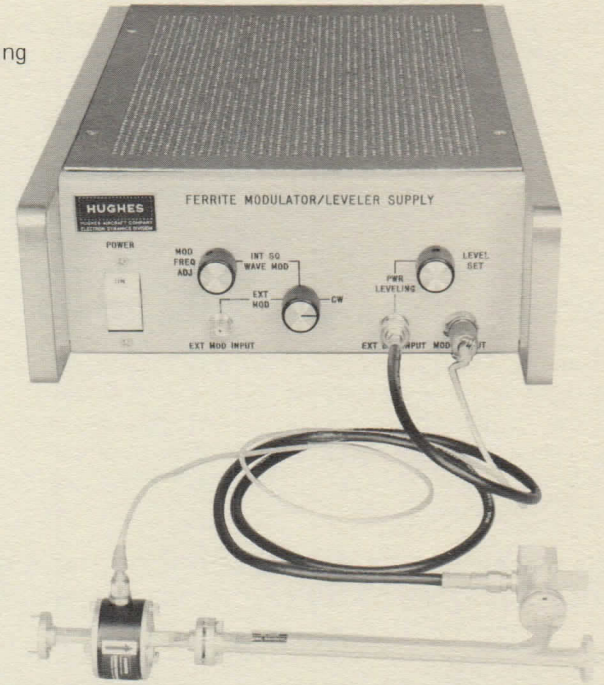

MODULATOR/LEVELER SUPPLY DESCRIPTION

The Hughes Model 44711H Modulator/Leveler Supply is tuned to a modulator which must be ordered at the same time as the supply. The 44711H provides square-wave modulation from the companion modulator or CW operation from the modulator with 20 dB of isolation. The system also provides an external leveling loop such as the one indicated in the block diagram (on the back page). Power leveling is accomplished by varying the insertion loss characteristics of the modulator. A dc amplifier in the modulator/leveler supply amplifies the difference between the output of the detector and a reference voltage, and biases the modulator to a higher insertion loss. This insertion loss state is controlled by the LEVEL SET knob on the 44711H which establishes the degree of leveling. The Modulator/Leveler Supply requires a detector with positive polarity and with a minimum sensitivity of 50 mV/mW.

MODULATOR/LEVELER PLUG-IN SUPPLY DESCRIPTION

The Model 44425H Modulator/Leveler Plug-In performs all the functions of the 44711H Modulator/Leveler Supply when used in the Hughes millimeter-wave plug-in sweep generator. Each 44425H Plug-In is tuned to a modulator which must be ordered at the same time as the Plug-In. See the data sheet describing the Hughes Millimeter Wave Plug-In Sweep Generator for specifications.

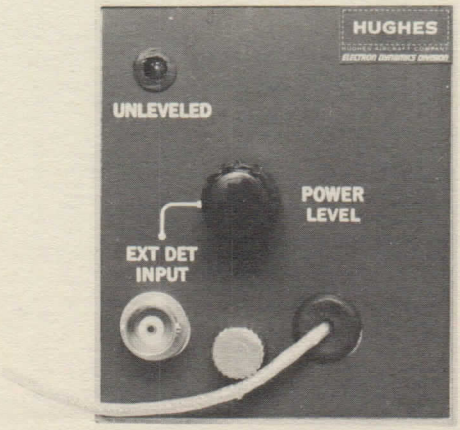

MILLIMETER–WAVE LEVELING LOOPS

HUGHES

HUGHES AIRCRAFT COMPANY

ELECTRON DYNAMICS DIVISION

LEVELING LOOP BLOCK DIAGRAM

Note: For leveling, the detector must have positive polarity with a minimum 50 mV/mW sensitivity. Connecting cables and line cords are supplied with purchase of either supply.

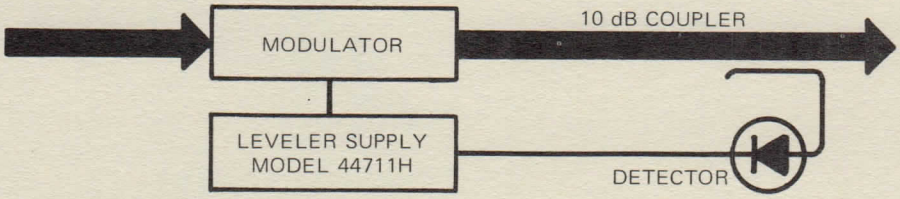

LEVELING LOOP SYSTEMS DESCRIPTION

When the 4434XH-310 series 10 dB couplers and 448XXH series detectors are ordered at the same time as the 44711H modulator/leveler supply and its companion 447XXH series modulator, the components are tested together to give the leveling-loop system specifications given below for either 10 GHz or full waveguide bandwidth leveling. The Hughes components shown as part of the leveling loop system are fully specified on separate data sheets. The dynamic range of 1 mW to 100 mW is the same for all leveling loops.

MODEL NUMBERS AND SPECIFICATIONS* FOR LEVEL LOOP SYSTEMS OF 10 GHz BANDWIDTH (at 25 ±10°C)

Frequency Band	Q	U	V	E	W
Frequency Range (GHz)	33-50	40-60	50-75	60-90	75-110
Flatness (±dB) (maximum)	1.5	1.5	1.5	2.0	2.0
Insertion and Coupling Loss ① (dB) (maximum)	2.5	2.5	2.5	3.0	3.0
Leveling Loop Model Number ② consisting of	44750H	44751H	44752H	44753H	44754H
Modulator Model Number	44718H	44713H	44705H	44714H	44715H
Coupler Model Number	44342H-310	44343H-310	44344H-310	44345H-310	44346H-310
Detector Model Number	44812H	44808H	44802H	44809H	44810H
Modulator/Leveler Supply Model Number	44711H	44711H	44711H	44711H	44711H

MODEL NUMBER AND SPECIFICATIONS* FOR FULL WAVEGUIDE BANDWIDTH LEVEL LOOP SYSTEMS (at 25 ±10°C)

Frequency Band	Ka	Q	U	V	E	W
Frequency Range (GHz)	26.5-40	33-50	40-60	50-75	60-90	75-110
Flatness (±dB) (maximum)	1.5	1.5	1.5	1.5	2.0	2.0
Insertion and Coupling Loss ① (dB) (maximum)	2.5	2.5	2.5	2.5	3.0	3.0
Leveling Loop Model Number consisting of	44760H	44761H	44762H	44763H	44764H	44765H
Modulator Model Number	44712H	44718H	44713H	44705H	44714H	44715H
Coupler Model Number	44341H-310	44342H-310	44343H-310	44344H-310	44345H-310	44346H-310
Full Band Level Detector Model Number	44820H	44821H	44822H	44823H	44824H	44825H
Modulator/Leveler Supply Model Number	44711H	44711H	44711H	44711H	44711H	44711H

* Specifications on the data sheet in effect at time of order will prevail.

① With the modulator biased to its lowest insertion loss state.

② Add -500 to leveling loop model number for plug-in supply model 44425H.

Your Local Representative

HUGHES
HUGHES AIRCRAFT COMPANY
ELECTRON DYNAMICS DIVISION SOLID-STATE MICROWAVE PRODUCTS 3100 West Lomita Boulevard, Torrance, California 90509, Tel (213) 534-2121

Printed in U.S.A. 9-75

HUGHES

HUGHES AIRCRAFT COMPANY

ELECTRON DYNAMICS DIVISION

MILLIMETER-WAVE ISOLATORS

FEATURES

- **Full Waveguide Bandwidth**
- **Low Insertion Loss**
- **High Isolation**

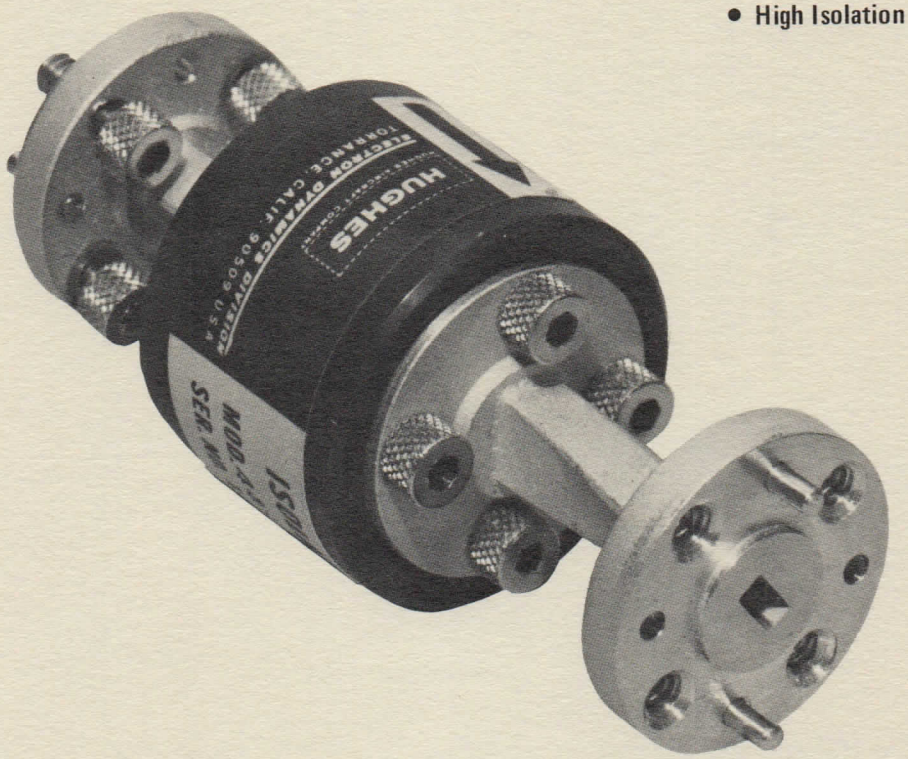

DESCRIPTION

Hughes Millimeter-Wave Isolators cover the frequency range of 26.5 GHz to 110 GHz in full waveguide bands. They are of the Faraday-rotation type and consist of a section of waveguide containing a low loss ferrite material and resistive elements. An external magnetic bias field is supplied by a permanent magnet. The combination gives rise to the non-reciprocal transmission characteristics permitting the devices to function as isolators.

The exceptionally broad bandwidth of these isolators makes them particularly useful in swept frequency applications. They are designed for use with the Hughes line of solid-state millimeter-wave sweep generators, but may also be used with backward wave oscillator (BWO) sweepers, micrometer tuned IMPATT oscillators and klystrons to prevent instabilities due to RF reflections.

MILLIMETER-WAVE ISOLATORS

HUGHES

HUGHES AIRCRAFT COMPANY

ELECTRON DYNAMICS DIVISION

PERFORMANCE SPECIFICATIONS

Frequency	Insertion Loss (dB max.)	Isolation (dB min.)	Input/Output VSWR (max.)	Model Number
26.5 - 40 GHz	1.5	25	1.5:1	**44607H**
33 - 50 GHz	1.8	25	1.5:1	**44610H**
40 - 60 GHz	1.8	25	1.5:1	**44604H**
50 - 75 GHz	1.8	25	1.5:1	**44603H**
60 - 90 GHz	2.0	25	1.5:1	**44605H**
75 - 110 GHz	3.0	25	1.5:1	**44606H**

TYPICAL PERFORMANCE CURVE

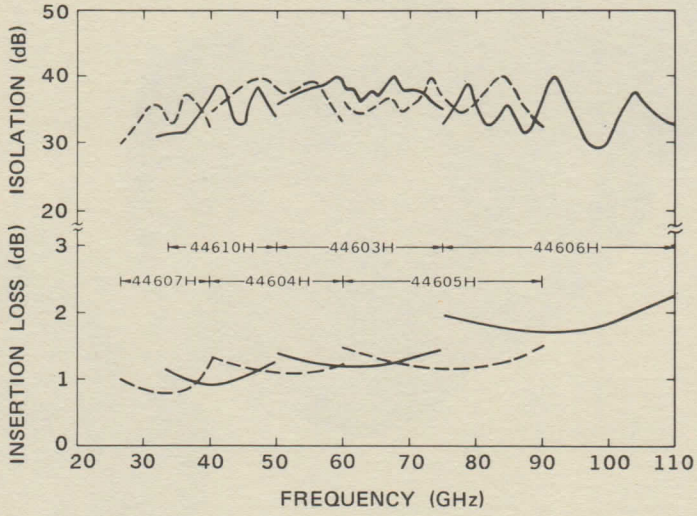

OUTLINE AND MOUNTING DATA

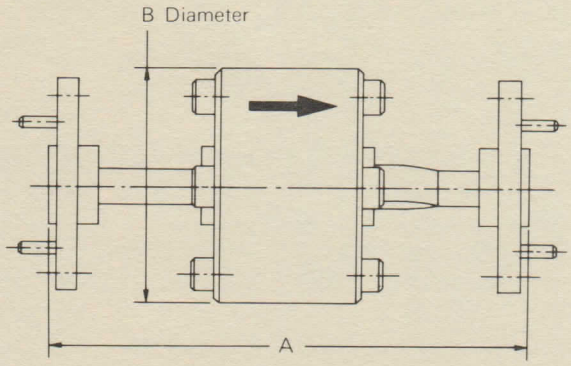

Waveguide	Maximum Dimensions in Inches (Centimeters) A	B	Mates With (Flange)	Model Number
WR-28	3.40 (8.7)	1.40 (3.6)	UG-599/U*	**44607H**
WR-22	3.30 (8.4)	1.40 (3.6)	UG-383/U Mod.	**44610H**
WR-19	3.20 (8.2)	1.40 (3.6)	UG-383/U Mod.	**44604H**
WR-15	2.70 (6.9)	1.30 (2.8)	UG-385/U	**44603H**
WR-12	2.70 (6.9)	1.30 (2.8)	UG-387/U	**44605H**
WR-10	2.60 (6.6)	1.30 (2.8)	UG-387/U Mod.	**44606H**

*UG-381/U available upon request.

YOUR LOCAL REPRESENTATIVE

HUGHES HUGHES AIRCRAFT COMPANY **ELECTRON DYNAMICS DIVISION** 3100 West Lomita Boulevard, Torrance, California 90509, Tel (213) 534-2121

Printed in U.S.A. 7/76

HUGHES

HUGHES AIRCRAFT COMPANY

ELECTRON DYNAMICS DIVISION

BROADBAND MILLIMETER-WAVE FLAT DETECTORS

FEATURES

- Full Waveguide Bandwidths
- 26.5 – 110 GHz in Six Bands
- Sensitivity Flatness of 3 dB
- Minimum Sensitivities of 100 mV/mW

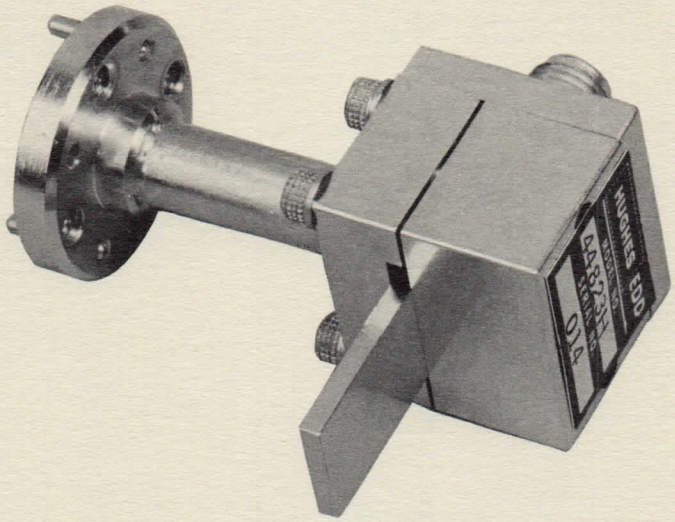

DESCRIPTION

The Hughes 4482XH series of Broadband Millimeter-Wave Flat Detectors utilize silicon Schottky barrier diodes mounted in Sharpless-type wafers. Sensitivity flatness is achieved by supplying a resistive load in the body of the detector, and careful tailoring of the impedance characteristics of the diode mount for full waveguide bandwidth. Sensitivity flatness of 3 dB in all bands to 75 GHz and 4 dB to 110 GHz are achieved in this manner.

The detectors are broadband in nature with minimum sensitivities of 100 mV/mW to 75 GHz and 75 mV/mW to 110 GHz.

When used in conjunction with the Hughes 4434XH series of waveguide couplers with 1.0 dB maximum coupling flatness, the coupler/detector combination can be used as part of any leveling system. When purchased in this combination, the sensitivity flatness specification of the broadband detector is the specification for flatness of the combination.

A complete leveling system can be purchased from Hughes consisting of a model 44700H series modulator, 44711H modulator/leveler supply and the above combination of coupler/detector. This combination is self-contained and can be purchased for any of the six waveguide bands from 26.5 to 110 GHz.

BROADBAND MILLIMETER-WAVE FLAT DETECTORS

HUGHES

HUGHES AIRCRAFT COMPANY

ELECTRON DYNAMICS DIVISION

SPECIFICATIONS* (AT 25 ±10°C)

Frequency Band	Ka	Q	U	V	E	W
Frequency (GHz)	26.5-40	33-50	40-60	50-75	60-90	75-110
Sensitivity Flatness (dB)	3	3	3	3	4	4
Sensitivity (mV/mW minimum)	100	100	100	100	75	75
VSWR (typical)	3:1	3:1	3:1	3:1	3:1	3:1
Saturation Level (mW typical)	100	100	100	100	100	100
Waveguide	WR-28	WR-22	WR-19	WR-15	WR-12	WR-10
Flange ①	UG-599/U ②	UG-383/U	UG-383/U (mod.)	UG-385/U	UG-387/U	UG-387/U (mod.)
Dimension A	2.60" (66.0 mm)	2.22" (56.4 mm)	1.94" (49.3 mm)	1.53" (38.9 mm)	1.37" (34.8 mm)	1.20" (30.5 mm)
Model Number (+ polarity) ③	**44820H**	**44821H**	**44822H**	**44823H**	**44824H**	**44825H**
Model Number (- polarity) ③	**44820H-500**	**44821H-500**	**44822H-500**	**44823H-500**	**44824H-500**	**44825H-500**

* Specifications on the data sheet in effect at time of order will prevail.

① Special flanges available upon request.

② Also available with UG-381/U flange.

③ Plus and minus polarities are stated as video output with respect to ground.

OUTLINE DRAWING

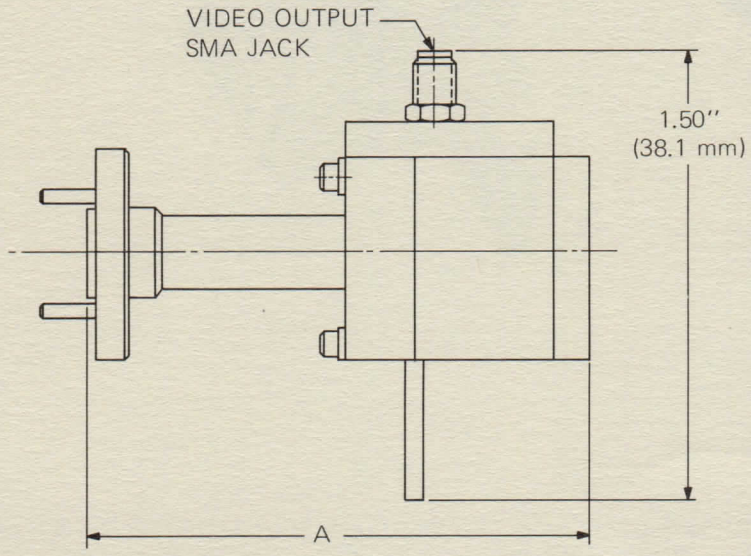

ALL DIMENSIONS ARE TYPICAL.

Your Local Representative

HUGHES
HUGHES AIRCRAFT COMPANY
ELECTRON DYNAMICS DIVISION SOLID-STATE MICROWAVE PRODUCTS 3100 West Lomita Boulevard, Torrance, California 90509, Tel (213) 534-2121

Printed in U.S.A. 9-75

HUGHES

HUGHES AIRCRAFT COMPANY

ELECTRON DYNAMICS DIVISION

MILLIMETER-WAVE LEVELING DETECTORS

FEATURES

- Coverage From 33 to 110 GHz
- High Sensitivity
- Flat Over 10 GHz Bandwidths

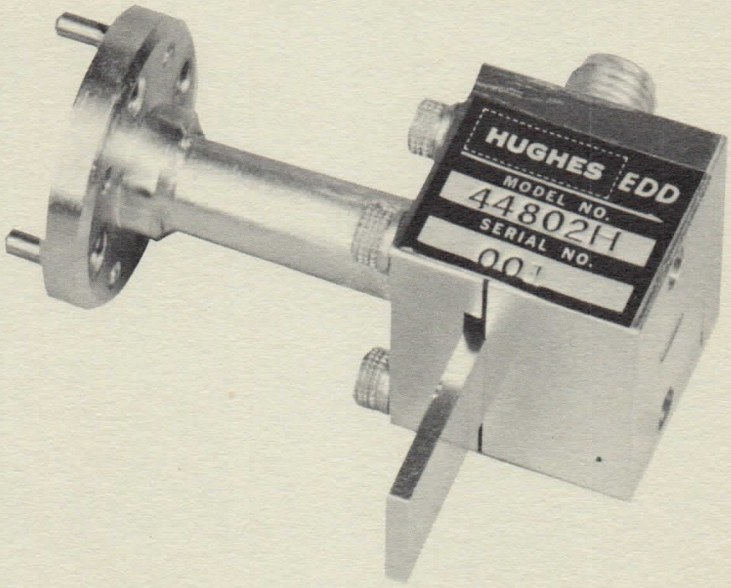

DESCRIPTION

The Hughes 448XXH series of Millimeter-Wave Leveling Detectors utilize silicon Schottky barrier diodes mounted in Sharpless-type wafers. Flatness is achieved by supplying a resistive load in the body of the detector and by carefully tailoring the impedance characteristics of the diode mount for a 10 GHz bandwidth. Sensitivity flatness specifications of 3 dB across any 10 GHz bandwidth between 33 and 75 GHz and 4 dB over 10 GHz between 60 and 110 GHz are achieved in this way.

The detectors are broadband with a sensitivity of 100 mV/mW minimum across a 10 GHz bandwidth and typically 20 mV/mW minimum across entire waveguide bands in the 33 to 75 GHz frequency range. 50 mV/mW minimum across a 10 GHz bandwidth and typically 10 mV/mW minimum over the entire waveguide band are achieved in the 60 to 110 GHz band.

When purchased in conjunction with the Hughes 4434XH series of Waveguide Couplers, the flatness of the detector is used for the flatness specification of the combination. This coupler/detector combination can be used as part of any leveling system.

MILLIMETER–WAVE LEVELING DETECTORS

HUGHES

HUGHES AIRCRAFT COMPANY

ELECTRON DYNAMICS DIVISION

SPECIFICATIONS* (at 25 ±10°C)

Frequency Band	Q	U	V	E	W
Frequency Range (GHz)	33-50	40-60	50-75	60-90	75-110
Flat Bandwidth (GHz)	10	10	10	10	10
Sensitivity Flatness (dB)	3	3	3	4	4
Sensitivity 10 GHz BW (mV/mW)	100	100	100	50	50
Full Bandwidth Sensitivity (mV/mW)	20	20	20	10	10
VSWR (typical)	3:1	3:1	3:1	3:1	3:1
Saturation Level (mW typical)	100	100	100	100	100
Waveguide	WR-22	WR-19	WR-15	WR-12	WR-10
Flanges ①	UG-383/U	UG-383/U (mod.)	UG-385/U	UG-387/U	UG-387/U (mod.)
Dimension A	2.22" (56.4 mm)	1.94" (49.3 mm)	1.53" (38.9 mm)	1.37" (34.8 mm)	1.20" (30.5 mm)
Model Number (+ polarity) ②	**44812H**	**44808H**	**44802H**	**44809H**	**44810H**
Model Number (– polarity) ②	**44812H-500**	**44808H-500**	**44802H-500**	**44809H-500**	**44810H–500**

* Specifications on the data sheet in effect at time of order will prevail.

① Special flanges available upon request.

② Plus and minus polarities are stated as video output with respect to ground.

OUTLINE DRAWING

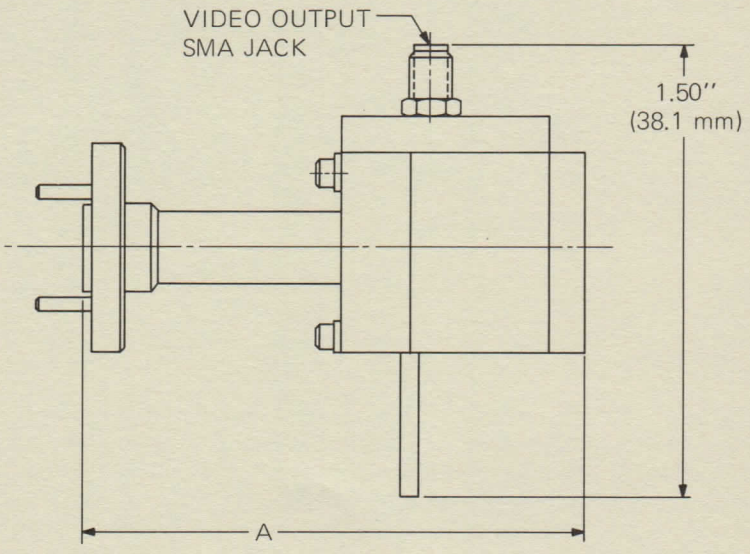

ALL DIMENSIONS ARE TYPICAL.

Your Local Representative

HUGHES
HUGHES AIRCRAFT COMPANY
ELECTRON DYNAMICS DIVISION SOLID-STATE MICROWAVE PRODUCTS 3100 West Lomita Boulevard, Torrance, California 90509, Tel (213) 534-2121

Printed in U.S.A. 9-75

HUGHES

HUGHES AIRCRAFT COMPANY

ELECTRON DYNAMICS DIVISION

MICROMETER TUNED MILLIMETER-WAVE SOURCES

26.5-110 GHz

FEATURES

- Frequency Coverage 26.5–110 GHz
- Wide Tuning Bandwidth
- Low Cost Reflex Klystron Replacement
- Integral Isolators & Regulators

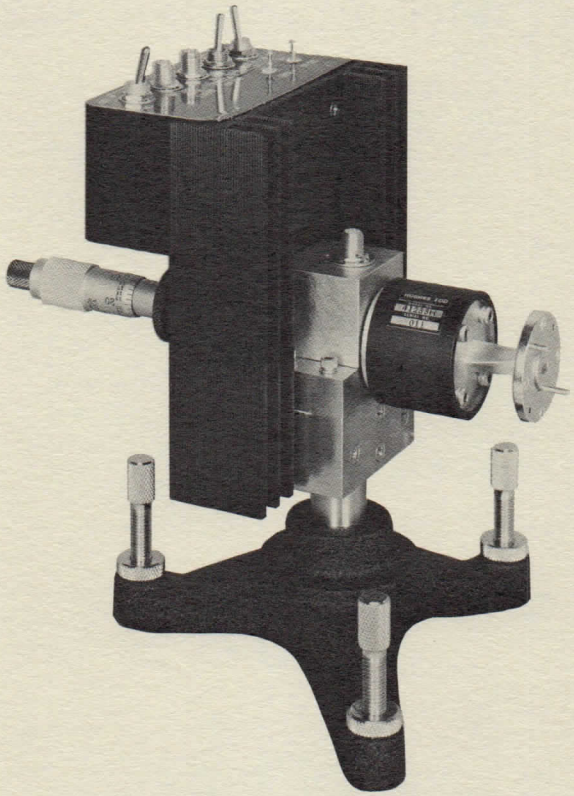

DESCRIPTION

The Hughes 412XXH Series of Solid State Sources are clean, narrow spectrum, CW millimeter-wave sources which are tunable over broad frequency bandwidths. The performance of these sources is comparable to that of a reflex klystron, but their longer life, lower voltage requirements and smaller size offer many advantages over the use of a klystron.

The sources consist of state-of-the-art IMPATT diodes mounted in specially designed oscillator cavities. The diodes, when biased into avalanche breakdown, oscillate when the threshhold current is exceeded. The frequency of oscillation is determined by the diode and cavity parameters, and the dc bias current.

Each source is supplied with a heat-sink stand, integral isolator, and attached regulator.

The input to the regulator is 30 to 50 volts dc at 500 mA maximum obtainable from any well regulated laboratory power supply by way of solder terminals. The source may be switched on and off manually at the regulator and selected for operation as a local oscillator or for FM/AFC voltage tuning of 30 to 50 MHz. This feature allows these sources to be stabilized by phase-locking and AFC loops.

MICROMETER TUNED MILLIMETER-WAVE SOURCES

26.5-110 GHz

HUGHES

HUGHES AIRCRAFT COMPANY

ELECTRON DYNAMICS DIVISION

SPECIFICATIONS*

Frequency Band		Ka	Q	U	V	E	W
Frequency Range (GHz)		26.5–40	33–50	40–60	50–75	60–90	75–110
Model Numbers and Minimum Power Output at Center Frequency	10 mW	–	–	–	–	–	**41261H**
	25 mW	–	–	–	–	**41252H**	**41262H**
	50 mW	**41213H**	**41223H**	**41233H**	**41243H**	**41253H**	**41263H**
	100 mW	**41214H**	**41224H**	**41234H**	**41244H**	–	–
Tuning Bandwidth (GHz)**		5	5	5	5	5	5
Waveguide Size		WR-28	WR-22	WR-19	WR-15	WR-12	WR-10
Flange		UG-599/U	UG-383/U	UG-383/U (mod.)	UG-385/U	UG-387/U	UG-387/U (mod.)

Frequency Stability (typical) . . . . . 0.005%/°C
Amplitude Stability (typical) . . . . . 0.01 dB/°C
Spurious Outputs (maximum) . . . . . –30 dBc
Ambient Operating Temperature . . . . . 15 – 35°C
Maximum Required dc Power Supply Voltage . . . . . 50 Vdc

*Specifications on data sheet in effect at time of order will prevail.

**Combination of electrical and mechanical tuning.

REGULATOR PANEL LAYOUT

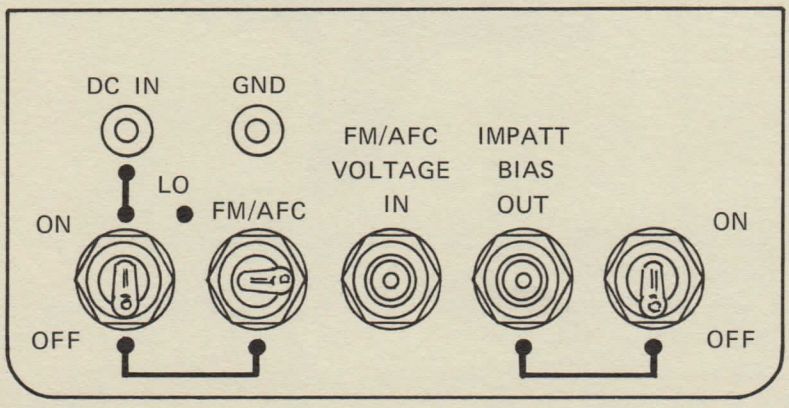

Your Local Representative:

HUGHES

HUGHES AIRCRAFT COMPANY

ELECTRON DYNAMICS DIVISION

MILLIMETER-WAVE BROADBAND DIRECTIONAL COUPLERS

FEATURES

- 26.5 – 110 GHz in Six Waveguide Sizes
- Full Waveguide Band Coverage
- High Directivity (>40 dB)
- Precision Coupling
- Ultraflat Frequency Response

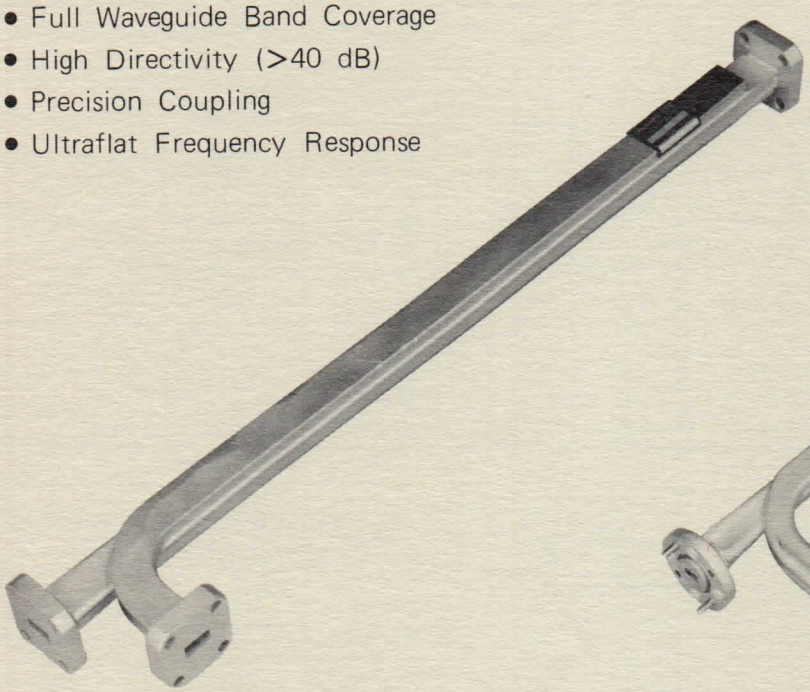

Ka-band, 10 dB directional coupler Model 44341H-310

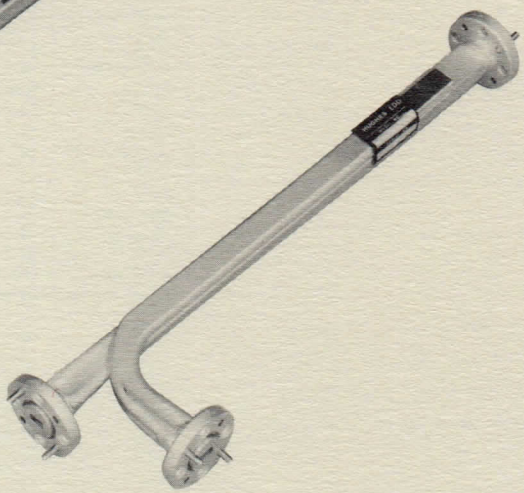

V-band, 10 dB directional coupler Model 44344H-310

DESCRIPTION

The Hughes Model 44340H series of millimeter-wave broadband directional couplers are available with coupling values of 3, 6, 10, and 20 dB covering the frequency range of 26.5 to 110 GHz in 6 waveguide sizes. Each model covers the full waveguide bandwidth with high directivity (>40 dB), small coupling variation (<± 0.5 dB) and excellent coupling accuracy (<± 0.5 dB). In addition, the Hughes directional couplers exhibit coupling accuracy and frequency variation that are repeatable from unit to unit. The key to this unique feature is a computer optimized, precision machined coupling plate used in the directional couplers.

The Hughes precision millimeter-wave directional couplers are ideally suited for broadband measurement and instrumentation. The high directivity allows greater limits of accuracy for reflection measurements. The small coupling variation with frequency is useful for power monitoring and leveling loop applications over a broadband.

SPECIFICATIONS*

Frequency Band			Ka	Q	U	V	E	W
Frequency Range (GHz)			26.5 – 40	33 – 50	40 – 60	50 – 75	60 – 90	75 – 110
Model Number	Nominal Coupling Value ①	3 dB	44341H-303	44342H-303	44343H-303	44344H-303	44345H-303	44346H-303
		6 dB	44341H-306	44342H-306	44343H-306	44344H-306	44345H-306	44346H-306
		10 dB	44341H-310	44342H-310	44343H-310	44344H-310	44345H-310	44346H-310
		20 dB	44341H-320	44342H-320	44343H-320	44344H-320	44345H-320	44346H-320
Coupling Accuracy (dB)			±0.5	±0.5	±0.5	±0.5	±0.5	±0.5
Coupling Variation (dB maximum)			±0.5	±0.5	±0.5	±0.5	±0.5	±0.5
Insertion Loss (dB maximum) ②			0.5	0.55	0.6	0.65	1.0	1.0
Directivity (dB minimum) ③			40	40	40	40	40	40
VSWR (maximum)	Main Line		1.1:1	1.1:1	1.1:1	1.1:1	1.1:1	1.1:1
	Coupled Arm		1.2:1	1.2:1	1.2:1	1.2:1	1.2:1	1.2:1
Waveguide Size			WR-28	WR-22	WR-19	WR-15	WR-12	WR-10
Flange ④			UG-599/U ⑤	UG-383/U	UG-383/U (mod.)	UG-385/U	UG-387/U	UG-387/U (mod.)
Dimensions	A		9.7" (247 mm)	8.02" (204 mm)	7.09" (180 mm)	5.92" (151 mm)	5.22" (133 mm)	4.62" (118 mm)
	B		0.77" (20 mm)	0.71" (18 mm)	0.71" (18 mm)	0.72" (19 mm)	0.72" (19 mm)	0.72" (19 mm)

*Specifications subject to change without notice.

① Coupling Value = $-10 \log_{10}(P_3/P_1)$

② Insertion Loss = $-10 \log_{10}\left[(P_2 + P_3)/P_1\right]$

③ Directivity = $10 \log_{10}(P_3/P'_3)$

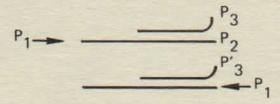

④ Special flanges available on request.

⑤ Also available with UG-381/U flange.

OUTLINE DRAWING

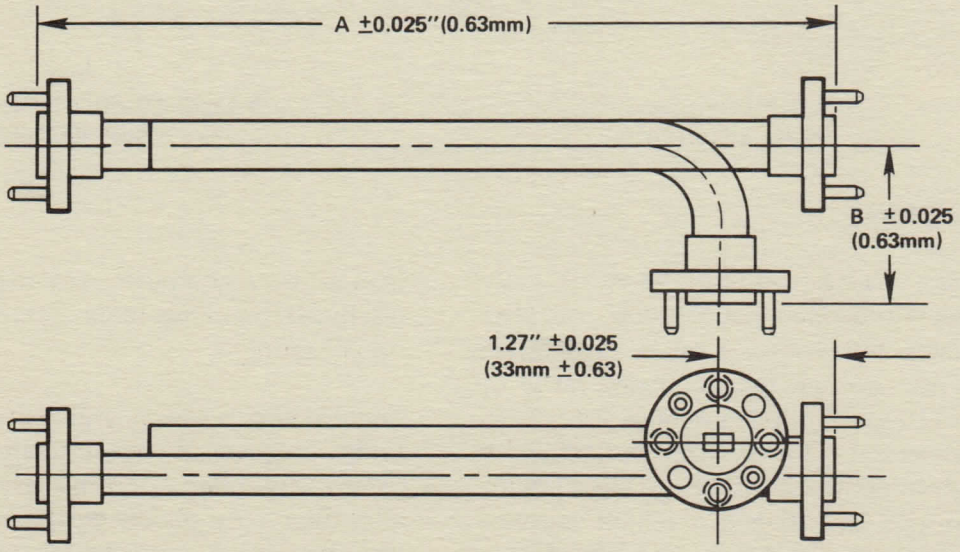

Your Local Representative

HUGHES

HUGHES AIRCRAFT COMPANY

ELECTRON DYNAMICS DIVISION

MILLIMETER-WAVE TEMPERATURE COMPENSATED THERMISTOR MOUNTS

26.5-110 GHz

FEATURES

- Temperature Compensated
- Broad Band Measurement Convenience
- 6 Waveguide Bands From 26.5 to 110 GHz

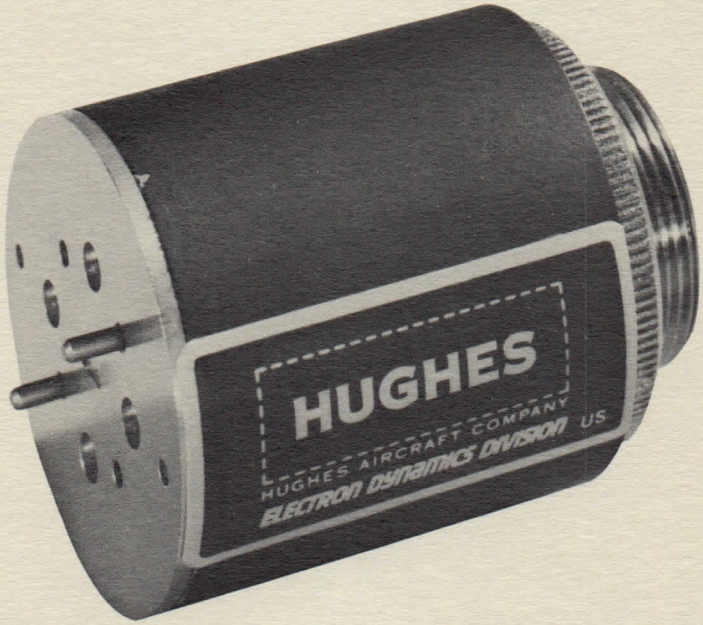

DESCRIPTION

The Hughes 4489XH Series of Temperature Compensated Thermistor Mounts provide full waveguide bandwidth coverage in the 26.5 to 90 GHz range. With these thermistor mounts, measurements can be made at millimeter-wave frequencies with the same convenience as those made in the lower microwave bands.

The mount consists of an RF and compensating thermistor that are matched for temperature coefficient before being paired in the waveguide mount. The mount is designed to be fully compatible with the Hewlett-Packard 431 and 432 series of analog and digital power meters.

MILLIMETER-WAVE TEMPERATURE COMPENSATED THERMISTOR MOUNTS

26.5-110 GHz

HUGHES

HUGHES AIRCRAFT COMPANY

ELECTRON DYNAMICS DIVISION

SPECIFICATIONS*

Frequency Range		Ka 26.5-40 GHz	Q 33-50 GHz	U 40-60 GHz	V 50-75 GHz	E 60-90 GHz	W ① 75-110 GHz
MODEL NUMBER		**44891H**	**44892H**	**44893H**	**44894H**	**44895H**	**44896H**
VSWR (maximum)		2:1	2:1	2:1	2:1	2:1	2:1
Bandwidth (GHz)		Full	Full	Full	Full	Full	10
Power Range	Low (μW)	10	10	10	10	10	10
	High (mW)	10	10	10	10	3	3
Operating Resistance (ohms)		200	200	200	200	200	200
Waveguide Size		WR-28	WR-22	WR-19	WR-15	WR-12	WR-10
Flange		UG-599/U ②	UG-383/U	UG-383/U (mod.)	UG-385/U	UG-387/U	UG-387/U (mod.)

① Frequency coverage in W-band is limited to 10 GHz. Specify *center frequency* when ordering.

② Also available with UG-381/U flange.

NOTE: Efficiency correction factor in dB supplied with each model.

* Specifications on data sheet in effect at time of order will prevail.

Your Local Representative:

HUGHES HUGHES AIRCRAFT COMPANY ELECTRON DYNAMICS DIVISION SOLID-STATE MICROWAVE PRODUCTS 3100 West Lomita Boulevard, Torrance, California 90509, Tel (213) 534-2121

Printed in U.S.A. 4-76

HUGHES

HUGHES AIRCRAFT COMPANY

ELECTRON DYNAMICS DIVISION

MILLIMETER-WAVE SPECTRUM ANALYZER MIXERS

FEATURES

- High Sensitivity
- Compatible with Hewlett Packard 8555A Spectrum Analyzer
- Coverage up to 110 GHz

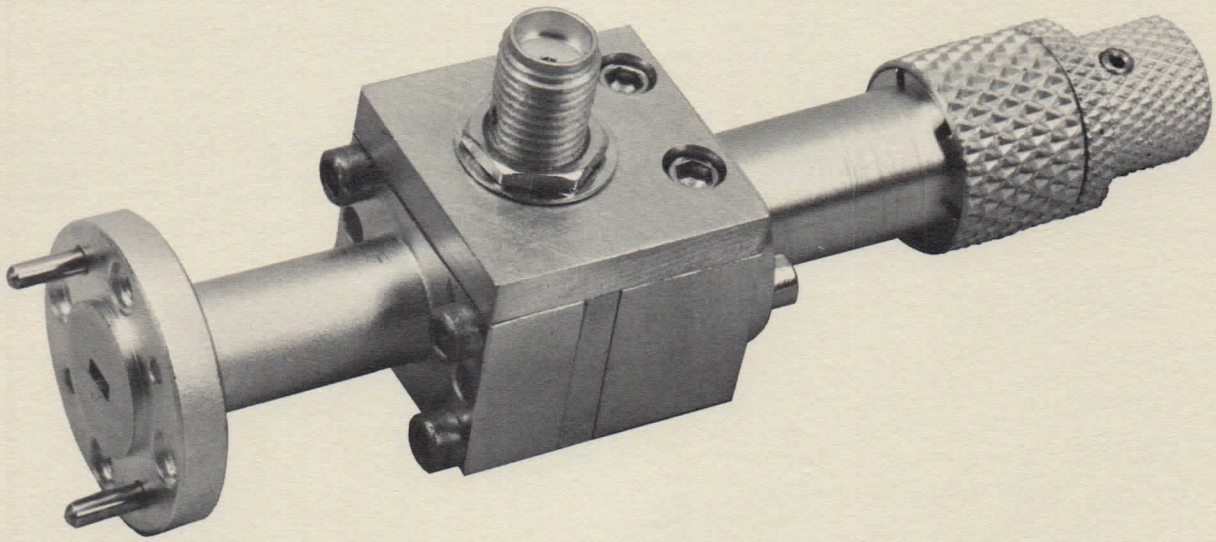

DESCRIPTION

The Hughes Model 4734XH series of Spectrum Analyzer Mixers extend the frequency range of the Hewlett Packard 8555A spectrum analyzer up to 100 GHz. The mixers are specifically designed for this application and their high sensitivity makes them ideally suited for detailed analysis of the spectral characteristics of millimeter-wave signals.

The mixer is connected to the "EXT MIXER" output on the spectrum analyzer which automatically supplies a variable dc bias to the mixer diode. Maximum mixer sensitivity is achieved by adjusting the bias control in the spectrum analyzer and tuning the movable short on the mixer.

The mixers are available in six standard waveguide bands; KA-through W-band. For coverage above W-band, consult factory.

MINIMUM DETECTABLE SIGNAL

Frequency Band (GHz)	Ka (26.5-40.0)	Q (33-50)	U (40-60)	V (50-75)	E (60-90)	W (75-110)
Sensitivity*	-51 dBm	-48 dBm	-45 dBm	-40 dBm	-36 dBm	-30 dBm

*Minimum detectable signal at mid-band. Sensitivity at band edges is within 3 dB of mid-band.

MILLIMETER-WAVE SPECTRUM ANALYZER MIXERS

HUGHES

HUGHES AIRCRAFT COMPANY

ELECTRON DYNAMICS DIVISION

DIMENSIONS, WAVEGUIDE SIZES AND FLANGES

Frequency Band (GHz)	Ka (26.5-40)	Q (33-50)	U (40-60)	V (50-75)	E (60-90)	W (75-110)
Dimensions inches (cm)	3.87 (9.83)	3.89 (9.88)	3.61 (9.17)	2.97 (7.54)	2.81 (7.14)	2.77 (7.04)
Waveguide Size	WR-28	WR-22	WR-19	WR-15	WR-12	WR-10
Waveguide Flange	UG-599/U① UG-381/U②	UG-383/U (mod)	UG-383/U	UG-385/U	UG-387/U	UG-387/U (mod)

① Square Flange

② Round Flange

HOW TO ORDER

Model Number 4734XH - X200

Frequency Band — 1:Ka, 2:Q, 3:U, 4:V, 5:E, 6:W

Flange Type — 1:Round, 2:Square (available in Ka-band only)

Example: To order a U-band unit, specify the following model number: 47343H-1200

Your Local Representative

Printed in USA 4/77

THERMAL PRODUCTS

HUGHES

HUGHES AIRCRAFT COMPANY

ELECTRON DYNAMICS DIVISION

1333H

Stainless Steel and Ammonia Heat Pipe

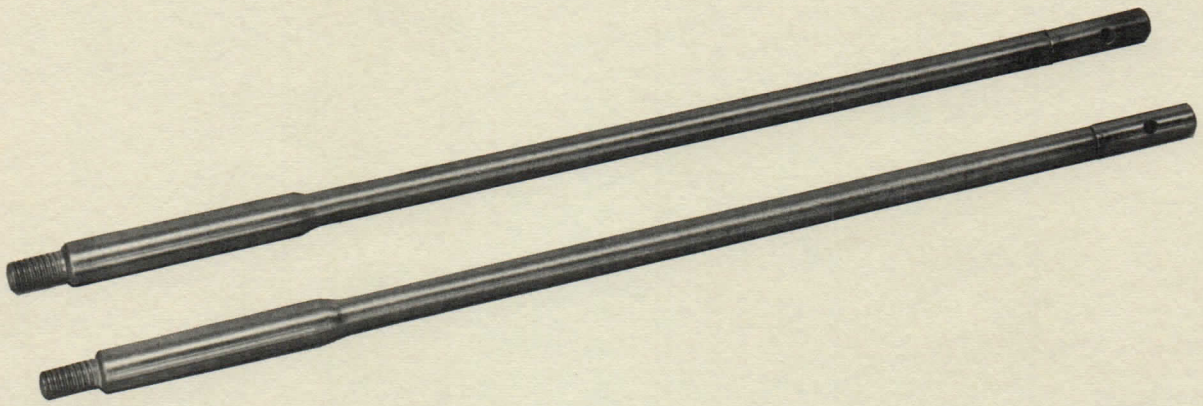

DESCRIPTION

The Model 1333H is a completely self-contained stainless steel and ammonia heat pipe device. It has no moving parts, requires no external power and can be operated reliably over long periods of time. This unit is capable of transferring thermal energy with little temperature gradient over the entire active length.

The 1333H may be used with a variety of heat sources with particular applications in cooling semiconductors, integrated circuits, transformers, and electron tubes. This heat pipe is a more efficient thermal conductor than metals such as copper, making it ideal for use as a replacement for, or in combination with, a variety of heat sinks.

FEATURES

PROVEN RELIABILITY – Experience with successful space and military programs and continuous life test programs assure long-lived, efficient operation.

LOW THERMAL MASS – Reduces warm-up time from cold start; less stored heat in the system at shut-down.

ESSENTIALLY ISOTHERMAL – Baseplates with unsatisfactory thermal distribution patterns may be made nearly isothermal by use of heat pipes.

SMALL AND LIGHTWEIGHT – Large thermal transport capacity for high component-density packaging and compact, lightweight, high-power equipment.

WIDE OPERATIONAL-TEMPERATURE RANGES – Applicable to space, airborne, and ground equipment for military and commercial requirements.

AUTOMATIC – Self-contained thermal transport system requires no external electrical or mechanical actuation for operation.

BILATERAL HEAT TRANSFER – Equalizes operational temperatures among components and assemblies.

Quick equipment warm-up in sub-zero ambients.

NOISELESS – Heat pipes operate silently. They convey heat through small feed-throughs to air-flow ducts for isolation of acoustic noise.

SEALED METALLIC ENVELOPE – Cool hermetically sealed units.

May be electrically bonded to, or insulated from, RFI and nuclear shielding in through-wall designs.

Through-wall cooling designs exclude contaminating vapor and dust.

ALTITUDE IMMUNITY – Heat is transported within the sealed heat pipe envelope. Internal heat transfer capacity is immune to the effects of external positive or negative atmospheric pressures.

THERMAL CHARACTERISTICS

Thermal Transport Capacity	
Evaporator 90° Below Condenser	50 W maximum
Horizontal Operation	15 W maximum
Evaporator 90° Above Condenser	7 W maximum
Thermal Resistance	0.9°C/W
Radial Flux Density	225 W/in²
Thermal Response Time (to equilibrium)	60 seconds
Temperature	
Recommended Operating Range	−80 to +90°C
Maximum Temperature Limit	120°C

PHYSICAL CHARACTERISTICS

Envelope Material	stainless steel
Wick Material	stainless steel
Working Fluid	ammonia
Weight	8 grams maximum
Active Length	5.69 inches
Mechanical Limits	
Torque	8 inch pounds
Bending	4 inch pounds
Tension	100 pounds
Seal Cover (pinch-off) and Mounting Stud	Thermally inactive. **Caution:** Do not use seal cover for mounting or support.

OUTLINE DRAWING

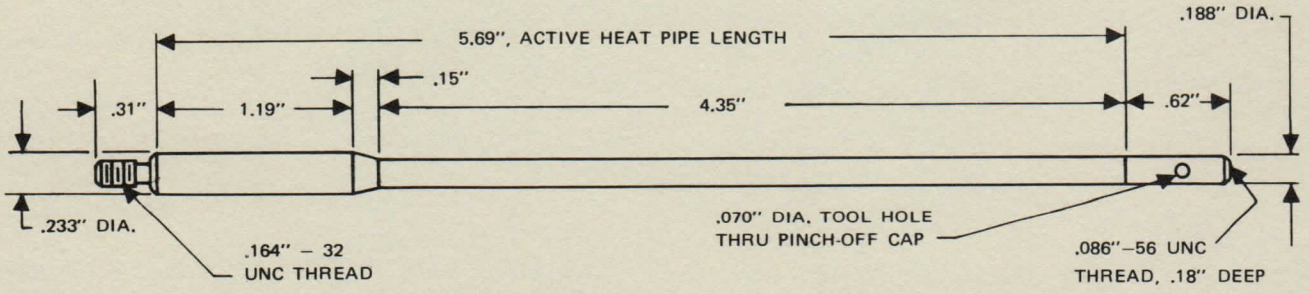

PERFORMANCE CURVES

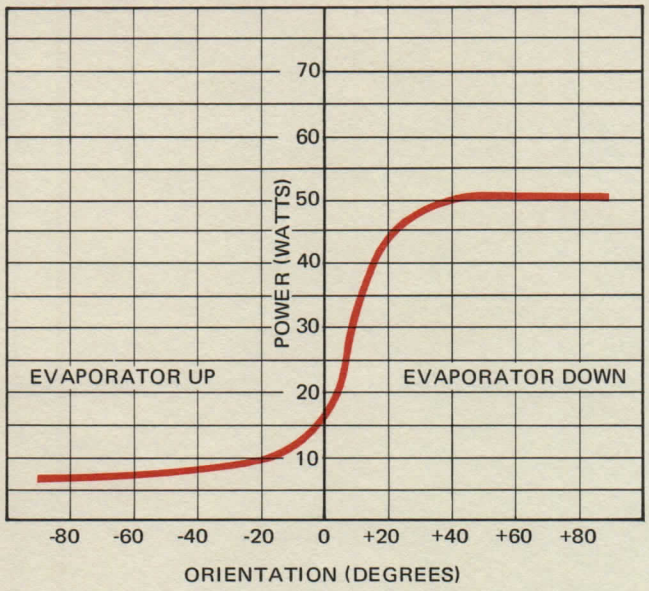

THERMAL TRANSPORT CAPACITY versus ORIENTATION

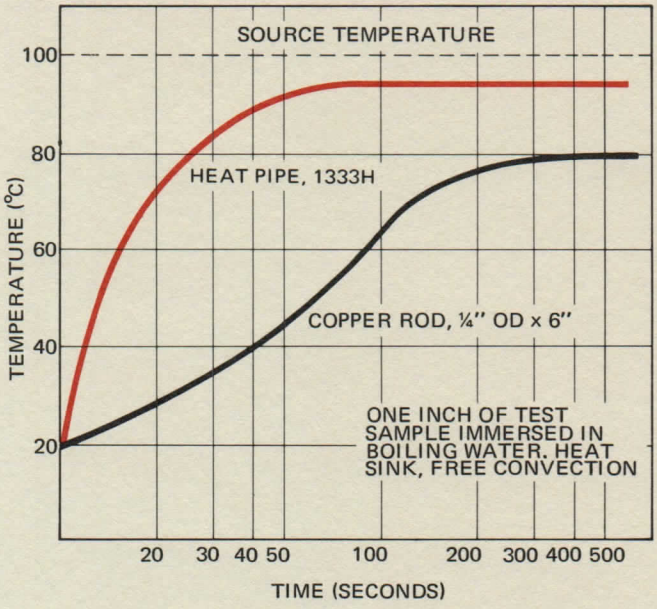

THERMAL RESPONSE TIME, HEAT PIPE versus COPPER ROD

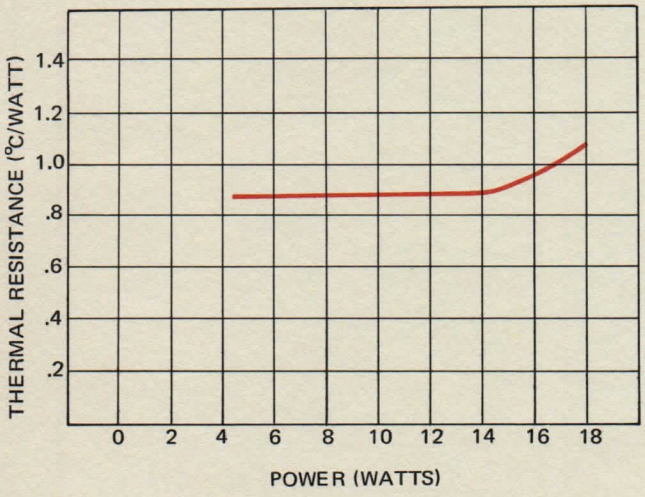

THERMAL RESISTANCE versus THERMAL TRANSPORT CAPACITY

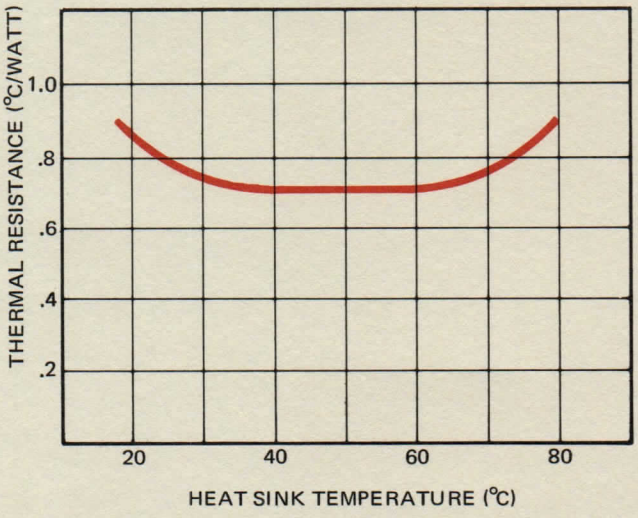

THERMAL RESISTANCE versus HEAT SINK TEMPERATURE

DESIGN CONSIDERATIONS

A simplified heat pipe system and its thermal equivalent are shown below to depict the areas of concern to the heat pipe user, especially in the area of thermal resistance of a heat pipe system. The total thermal resistance of the heat pipe (exterior evaporator surface to the exterior condenser) is given in the "Thermal Characteristics" section of this data sheet. Additional thermal resistance is encountered in the interface to the heat pipe and within the heat source and heat sink. Care should be exercised to insure low thermal resistance junctions to the heat pipe by means of adequate mechanical attachments and the use of thermal paste.

HEAT PIPE SYSTEM

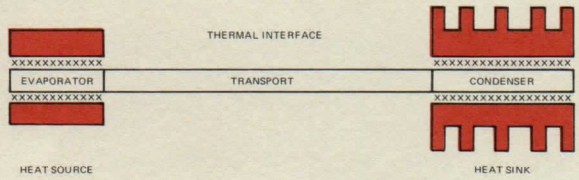

THERMAL EQUIVALENT

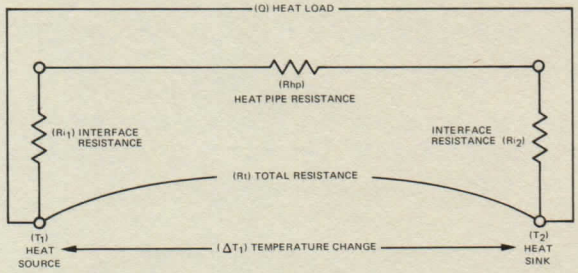

$Rt = Ri_1 + Rhp + Ri_2$ (°C/W)

ΔT_1 (°C) = Q(W) x Rt = $T_1 - T_2$

Example

Assume one wishes to find the temperature of a heat source dissipating 10 watts through a 1333H heat pipe to air-cooled fins with a capacity of .5 W/in²/°C above ambient. Further assumptions:

- Ambient temperature is 30°C
- Horizontal operation of the heat pipe
- Clamping length on source 1 inch
- Clamping length on sink 1.5 inches
- Interfaces have .001 inch layer of thermal paste (.05°C/W/in² given by manufacturer)

Thermal resistance interface (Ri_1) = $\frac{.05}{\pi \times .233 \times 1}$ = .068°C/W

Thermal resistance heat pipe (Rhp) = .9°C/W (given in data sheet)

Thermal resistance interface (Ri_2) = $\frac{.05}{\pi \times .188 \times 1.5}$ = .056°C/W

Total resistance (Rt) = .068 + .9 + .056 = 1.024°C/W

Temperature change source to sink (ΔT_1) = 10 W x 1.024 = 1 24°C

An additional temperature drop (ΔT_2), normally the most significant one, will be found between the sink and the cooling medium, in this case ambient air. This drop must be added to ΔT_1 to obtain the source temperature.

$\Delta T_2 = \frac{10\ W}{.5 \times \pi \times 1.5 \times .188}$ = 22.58°C + 30°C (ambient) = 52.58°C

The source temperature is ΔT_1 plus ΔT_2 or 62.82°C

DESIGN CHECK LIST

POTENTIAL PROBLEM	PROBLEM AVOIDANCE
Condenser below evaporator — Excessive negative inclination of the evaporator-condenser longitudinal axis with respect to horizontal plane	Consult "Maximum Power vs. Orientation" curve for capacity versus axis inclination
Exceeding rated heat transport capacity	Refer to "Radial Flux Density" and performance curves for basic rating
Exceeding temperature ratings—Operating and non-operating	Refer to "Thermal Characteristics" section
Mechanical loading — Excessive torque, bending and tension	Refer to "Mechanical Limits"
Hot spots at evaporator or condenser — Excessive radial thermal flux density or "dry-out"	"Dry-out," sometimes inappropriately called "burn-out," is a reversible condition in which the wick-pumping rate is insufficient to supply fluid return to the evaporator. ("Refer to "Thermal Characteristics" section)
Freezing	Prolonged non-operating exposure of the heat pipe to temperatures below the freezing point of the working fluid will render it inoperative. Normally no damage will result. In most applications, turning-on equipment power in the usual manner will thaw the working fluid and restore the heat pipe to full operation. Applications involving extremely low temperatures and intermittent high radial fluxes should be discussed with our engineering department.
Excessive coupling resistance	Care should be exercised to secure intimate contact at mechanical-thermal junctions. Particular attention should be given to the attachment of the heat source to the heat-pipe evaporator and the heat-pipe condenser to the heat sink to insure low resistance heat paths. Such mechanical bonds may be thermally enhanced by the use of suitable heat-conductive pastes between mating surfaces.
Corrosion	The usual precautions against use in corrosive environments should be observed. Dissimilar base metals and finishes, widely different in the galvanic series, should not be used for support or coupling to the heat pipe transport section, evaporator, or condenser.

HUGHES

HUGHES AIRCRAFT COMPANY

ELECTRON DYNAMICS DIVISION

1333H

Stainless Steel and Ammonia Heat Pipe

YOUR LOCAL HUGHES REPRESENTATIVE

HUGHES
HUGHES AIRCRAFT COMPANY

ELECTRON DYNAMICS DIVISION / 3100 W. LOMITA BLVD. TORRANCE, CA. 90509 / TEL (213) 534-2121

Printed in U.S.A. — 3-74

HUGHES

HUGHES AIRCRAFT COMPANY

ELECTRON DYNAMICS DIVISION

1350H SERIES

Stainless Steel and Methanol Heat Pipes

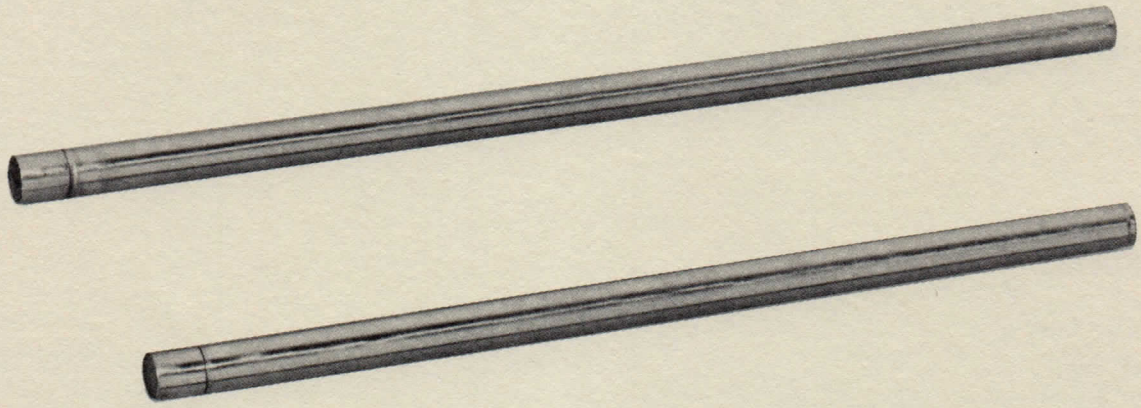

DESCRIPTION

The 1350H Series of axial stainless steel and methanol heat pipes are completely self-contained, have no moving parts, and require no external power. These pipes, originally designed for long life and reliability in space programs, are capable of transferring thermal power with little temperature gradient over their complete working length.

Typical uses include transformer cores, solid-state devices, circuit boards, electro-optical systems and in a large variety of other applications where a more efficient thermal conductor is necessary.

FEATURES

PROVEN RELIABILITY – Experience with successful space and military programs and continuous life test programs assure long-lived, efficient operation.

LOW THERMAL MASS – Reduces warm-up time from cold start; less stored heat in the system at shut-down.

ESSENTIALLY ISOTHERMAL – Baseplates with unsatisfactory thermal distribution patterns may be made nearly isothermal by use of heat pipes.

SMALL AND LIGHTWEIGHT – Large thermal transport capacity for high component-density packaging and compact, lightweight, high-power equipment.

WIDE OPERATIONAL-TEMPERATURE RANGES – Applicable to space, airborne, and ground equipment for military and commercial requirements.

AUTOMATIC – Self-contained thermal transport system requires no external electrical or mechanical actuation for operation.

BILATERAL HEAT TRANSFER – Equalizes operational temperatures among components and assemblies.

Quick equipment warm-up in sub-zero ambients.

NOISELESS – Heat pipes operate silently. They convey heat through small feed-throughs to air-flow ducts for isolation of acoustic noise.

SEALED METALLIC ENVELOPE – Cool hermetically sealed units.

May be electrically bonded to, or insulated from, RFI and nuclear shielding in through-wall designs.

Through-wall cooling designs exclude contaminating vapor and dust.

ALTITUDE IMMUNITY – Heat is transported within the sealed heat pipe envelope. Internal heat transfer capacity is immune to the effects of external positive or negative atmospheric pressures.

THERMAL CHARACTERISTICS

	Size (inches) 3/16 x 6	1/4 x 6	1/2 x 6	
Thermal Transport Capacity				
Evaporator 90° Below Condenser	55	75	180	W maximum
Horizontal Operation	17	25	60	W maximum
Evaporator 90° Above Condenser	6	10	20	W maximum
Thermal Resistance	0.85	0.55	0.42	°C/W
Thermal Response (to equilibrium)				50 seconds (¼ inch diameter)
Temperature				
Recommended Operating Range				−40°C to +120°C
Maximum Temperature Limit				200°C
Radial Flux Density				180 W/in.²

PHYSICAL CHARACTERISTICS

Envelope Material				stainless steel
Wick Material				stainless steel
Working Fluid				methanol
Standard Active Length				6 inches
Mechanical Limits				
Torque	8	15	125	inch pounds
Bending	4	8	60	inch pounds
Tension	100	140	600	pounds
Weight	8	11	38	grams
Seal Cover (pinch-off)				thermally inactive. **Caution:** Do not use seal cover for mounting or support.

OUTLINE DRAWING

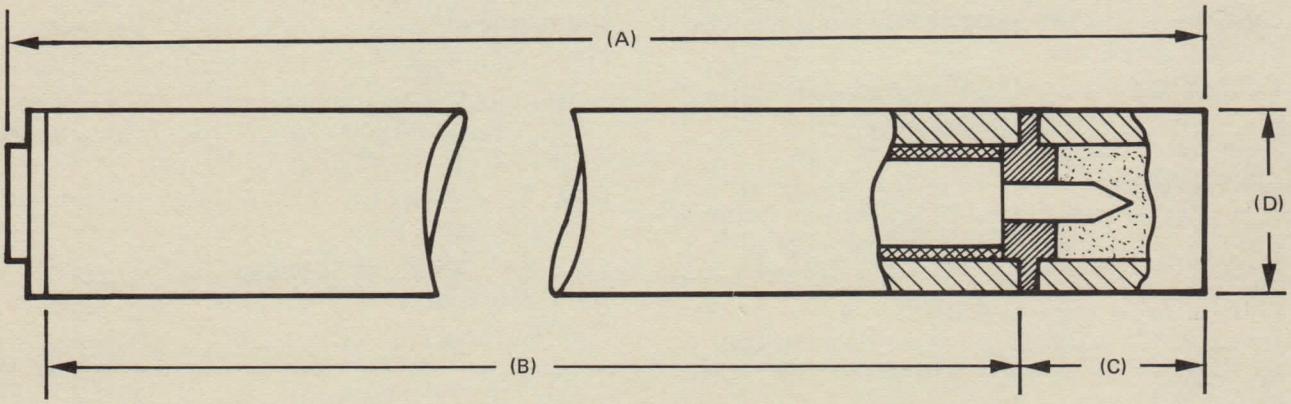

MODEL NO.	(A) Overall Length (in.)	(B) Active Length (in.)	(C) Pinch-Off Cover (in.)	(D) Diameter (in.)
1350H018-6	6.4	6.0	0.32	0.18
1350H025-6	6.4	6.0	0.32	0.25
1350H050-6	6.4	6.0	0.32	0.50

PERFORMANCE CURVES

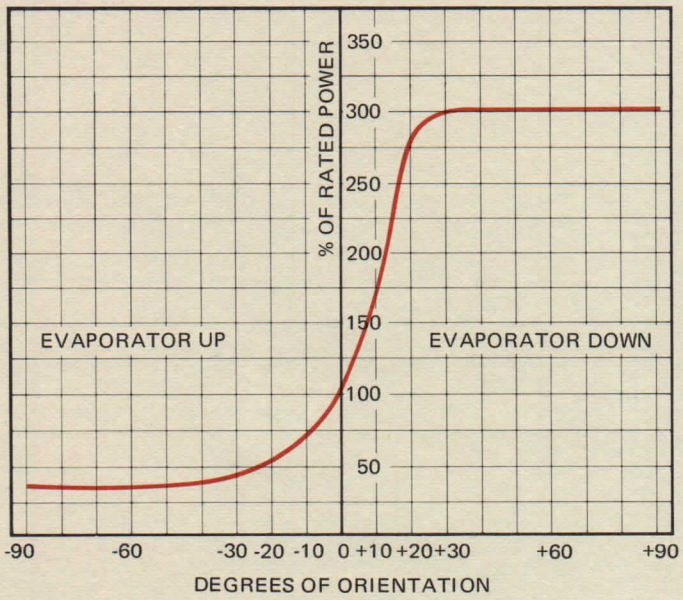

THERMAL TRANSPORT CAPACITY versus ORIENTATION

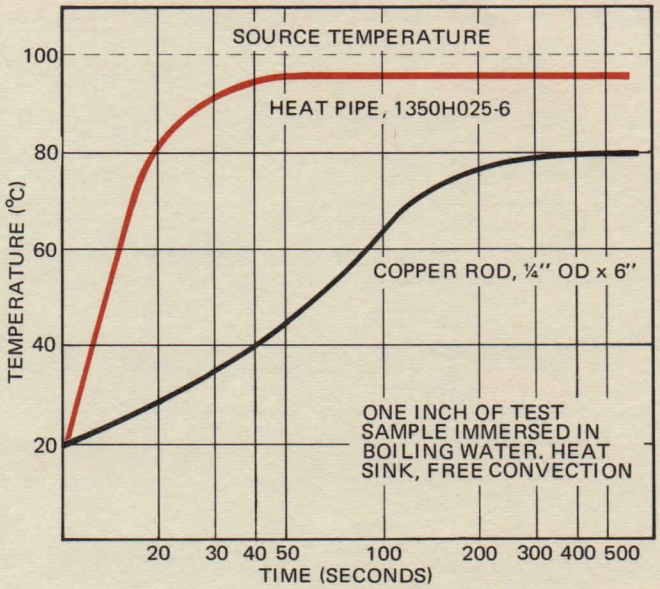

THERMAL RESPONSE TIME, HEAT PIPE versus COPPER ROD

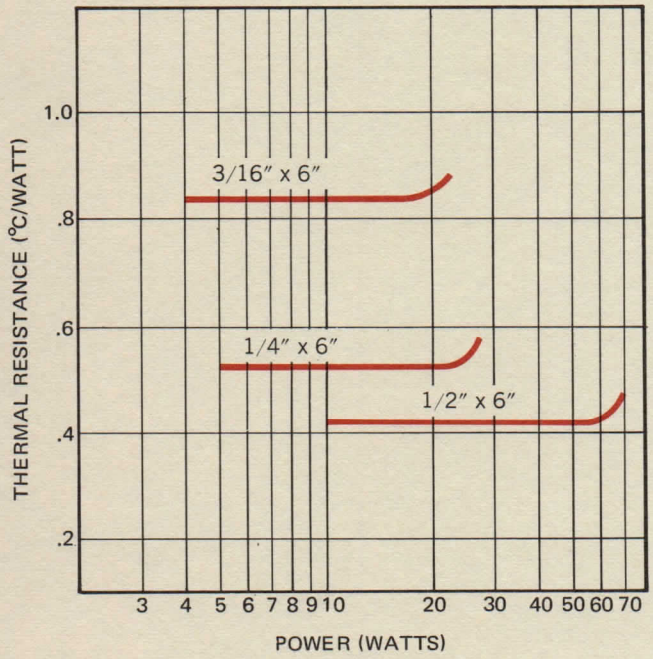

THERMAL RESISTANCE versus THERMAL TRANSPORT CAPACITY

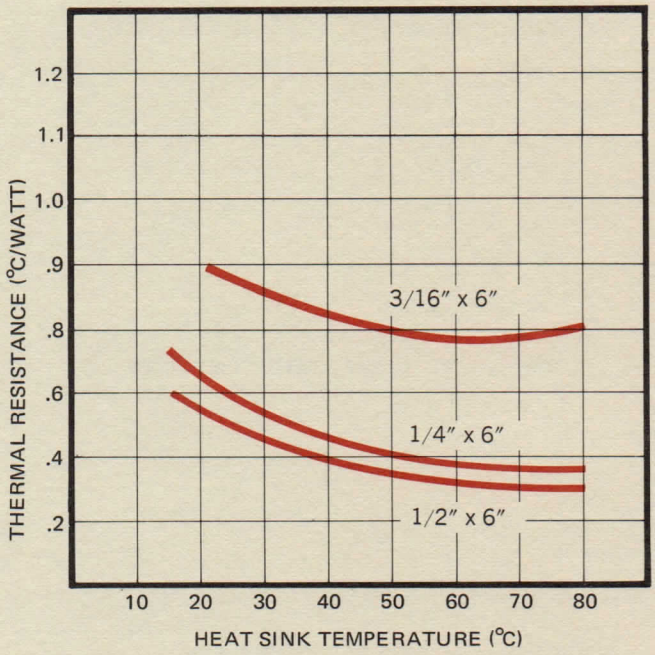

THERMAL RESISTANCE versus HEAT SINK TEMPERATURE

DESIGN CONSIDERATIONS

A simplified heat pipe system and its thermal equivalent are shown below to depict the areas of concern to the heat pipe user, especially in the area of thermal resistance of a heat pipe system. The total thermal resistance of the heat pipe (exterior evaporator surface to the exterior condenser) is given in the "Thermal Characteristics" section of this data sheet. Additional thermal resistance is encountered in the interface to the heat pipe and within the heat source and heat sink. Care should be exercised to insure low thermal resistance junctions to the heat pipe by means of adequate mechanical attachments and the use of thermal paste.

HEAT PIPE SYSTEM

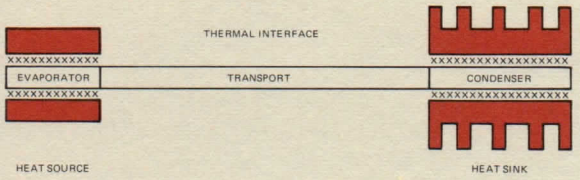

THERMAL EQUIVALENT

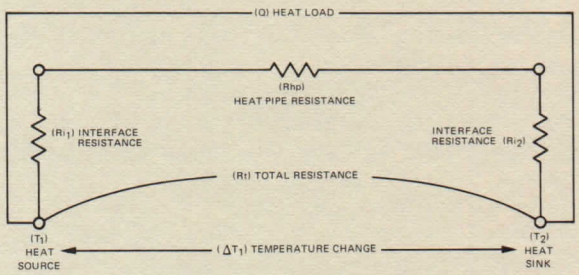

$Rt = Ri_1 + Rhp + Ri_2$ (°C/W)

ΔT_1 (°C) = Q(W) x Rt = $T_1 - T_2$

Example

Assume one wishes to find the temperature of a heat source dissipating 20 watts through a heat pipe to air cooled fins with a capacity of .5 W/in² /°C above ambient. Further assumptions:

- Ambient temperature 30°C
- Horizontal operation of ¼ inch stainless steel and methanol heat pipe
- Clamping area on source 1 inch
- Clamping area on sink 1.5 inches
- Interfaces having .001 inch layer of thermal paste (.05°C/W/in.² given by manufacturer)

Thermal resistance interface (Ri_1) = $\frac{.05}{\pi \times .25 \times 1}$ = .064°C/W

Thermal resistance heat pipe (Rhp) = .55°C/W (given in data sheet)

Thermal resistence interface (Ri_2) = $\frac{.05}{\pi \times .25 \times 1.5}$ = .042°C/W

Total resistance Rt = .064 + .55 + .042 = .656°C/W

Temperature change source to sink (ΔT_1) = 20 W x .656 = 13.12°C

An additional temperature drop, normally the most significant one, will be found between the sink and the cooling medium, in this case ambient air. This drop (ΔT_2) must be added to ΔT_1 to obtain the source temperature.

$\Delta T_2 = \frac{20\ W}{.5 \times \pi \times 1.5 \times .25}$ = 33.97°C + 30°C (ambient) = 63.97°C

The source temperature is ΔT_1 plus ΔT_2 or 77.09°C

DESIGN CHECK LIST

POTENTIAL PROBLEM	PROBLEM AVOIDANCE
Condenser below evaporator — Excessive negative inclination of the evaporator-condenser longitudinal axis with respect to horizontal plane	Consult "Maximum Power vs. Orientation" curve for capacity versus axis inclination
Exceeding rated heat transport capacity	Refer to "Radial Flux Density" and performance curves for basic rating
Exceeding temperature ratings—Operating and non-operating	Refer to "Thermal Characteristics" section
Mechanical loading — Excessive torque, bending and tension	Refer to "Mechanical Limits"
Hot spots at evaporator or condenser — Excessive radial thermal flux density or "dry-out"	"Dry-out," sometimes inappropriately called "burn-out," is a reversible condition in which the wick-pumping rate is insufficient to supply fluid return to the evaporator. ("Refer to "Thermal Characteristics" section)
Freezing	Prolonged non-operating exposure of the heat pipe to temperatures below the freezing point of the working fluid will render it inoperative. Normally no damage will result. In most applications, turning-on equipment power in the usual manner will thaw the working fluid and restore the heat pipe to full operation. Applications involving extremely low temperatures and intermittent high radial fluxes should be discussed with our engineering department.
Excessive coupling resistance	Care should be exercised to secure intimate contact at mechanical-thermal junctions. Particular attention should be given to the attachment of the heat source to the heat-pipe evaporator and the heat-pipe condenser to the heat sink to insure low resistance heat paths. Such mechanical bonds may be thermally enhanced by the use of suitable heat-conductive pastes between mating surfaces.
Corrosion	The usual precautions against use in corrosive environments should be observed. Dissimilar base metals and finishes, widely different in the galvanic series, should not be used for support or coupling to the heat pipe transport section, evaporator, or condenser.

HUGHES

HUGHES AIRCRAFT COMPANY

ELECTRON DYNAMICS DIVISION

1350H SERIES

Stainless Steel and Methanol Heat Pipes

TO ORDER SPECIFY MODEL NUMBER

MODEL NUMBER	THERMAL TRANSPORT CAPACITY (watts)	DIAMETER (inches)	ACTIVE LENGTH (inches)*
1350H018-6	17	3/16	6
1350H025-6	25	1/4	6
1350H050-6	60	1/2	6

*Contact factory for information on special lengths from 4 to 12 inches

YOUR LOCAL HUGHES REPRESENTATIVE

HUGHES
HUGHES AIRCRAFT COMPANY

ELECTRON DYNAMICS DIVISION / 3100 W. LOMITA BLVD. TORRANCE, CA. 90509 / TEL (213) 534-2121

Printed in U.S.A. — 3-74

HUGHES

HUGHES AIRCRAFT COMPANY

ELECTRON DYNAMICS DIVISION

1361H

Flexible Stainless Steel and Methanol Heat Pipe

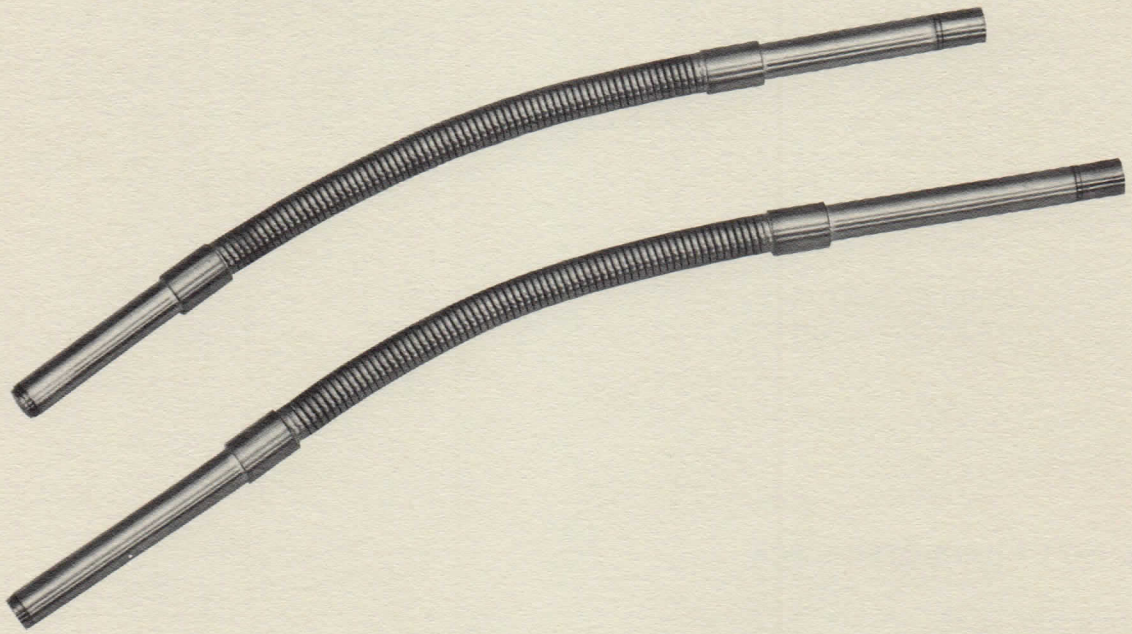

DESCRIPTION

The 1361H flexible stainless steel and methanol heat pipe is intended for a wide range of potential applications where relative motion between the heat source and the heat sink is experienced. Available in both seven inch (Model 1361H-7) and eight inch (Model 1361H-8) lengths, this unique heat pipe can be used with each end vibrating at different amplitudes or with one end stationary and the other moving. It is also an ideal choice for heat transfer when loops, bends or rearrangement of components is a requirement or for retrofitting equipment with unpredicted hot spots.

The stainless steel envelope can be bent from a straight orientation to a minimum 1-1/8 inch inside radius of curvature and may be flexed in all radial directions. The 1361H has been engineered to avoid wick bunching problems.

APPLICATIONS

The 1361H heat pipe is specifically designed to solve heat transfer problems in: (1) vibration-isolated components; (2) breadboard designs; and, (3) equipment reoriented during use.

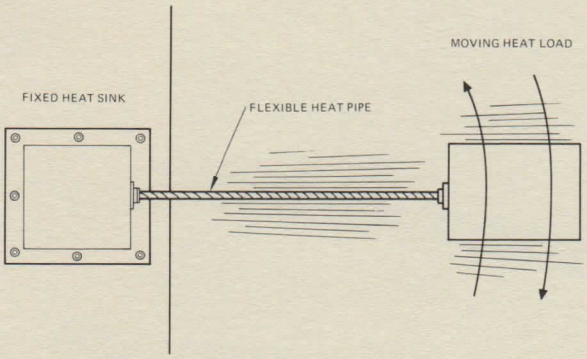

FLEXIBLE HEAT PIPE
(VIBRATING EQUIPMENT)

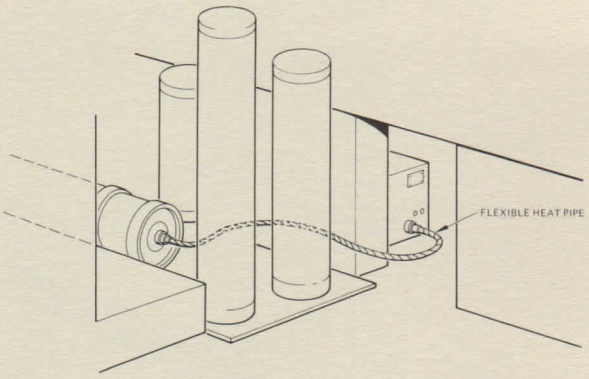

FLEXIBLE HEAT PIPE
(AROUND OBSTRUCTIONS)

THERMAL CHARACTERISTICS

Thermal Transport Capacity	
Evaporator 90° Below Condenser	20 W Maximum
Horizontal Operation	7.5 W Maximum
Evaporator 90° Above Condenser	2.5 W Maximum
Thermal Resistance (horizontal operation)	1.6°C/W
Thermal Response (to equilibrium)	100 Seconds
Temperature	
Recommended Operating Range	−40°C to +120°C
Maximum Temperature Limit	125°C
Radial Flux Density	180 W/in^2

PHYSICAL CHARACTERISTICS

Envelope Material	Stainless Steel
Wick Material	Stainless Steel
Working Fluid	Methanol
Minimum Bend Radius	1-1/8 inches
Standard Active Length	7 or 8 inches
Weight	(7") 18, (8") 20 grams nominal
Seal Cover (Pinch-off)	Caution: Do not use seal cover for mounting or support

PERFORMANCE CURVES

THERMAL TRANSPORT CAPACITY versus ORIENTATION

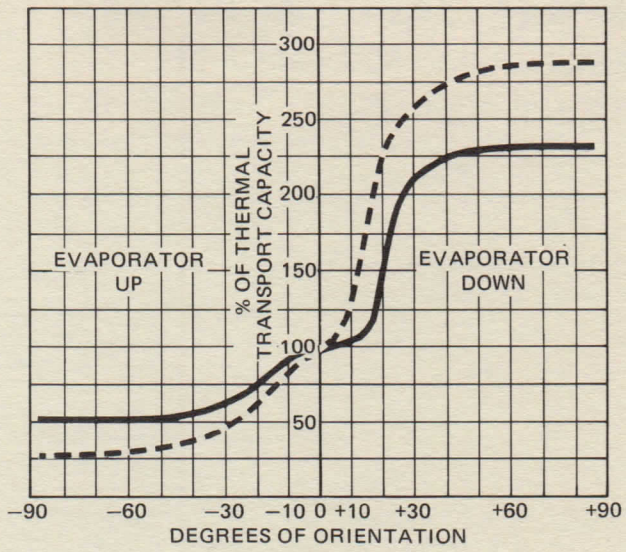

HEAT PIPE STRAIGHT
HEAT PIPE BENT 90°

THERMAL RESPONSE TIME, HEAT PIPE versus COPPER ROD

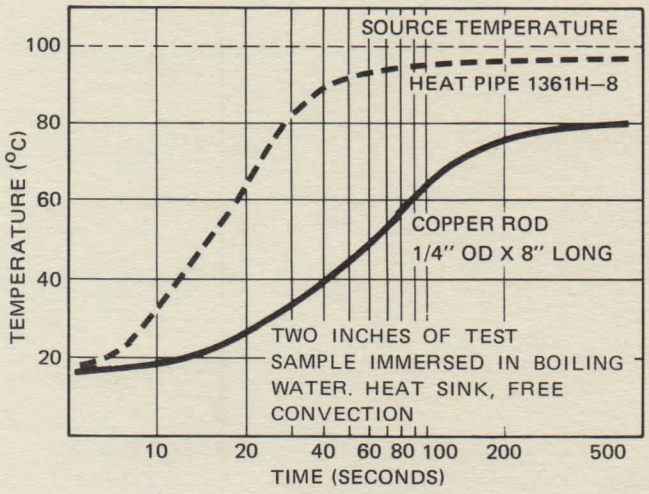

THERMAL RESISTANCE versus THERMAL TRANSPORT CAPACITY

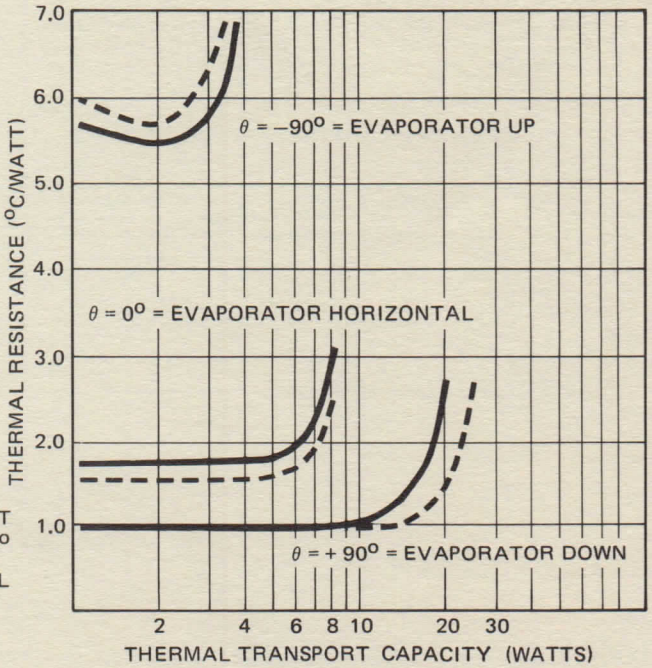

HEAT PIPE STRAIGHT
HEAT PIPE BENT *90°

* CONDENSER HORIZONTAL IN BENT TEST MODES

1361H

Flexible Stainless Steel and Methanol Heat Pipe

HUGHES

HUGHES AIRCRAFT COMPANY

ELECTRON DYNAMICS DIVISION

OUTLINE DRAWINGS

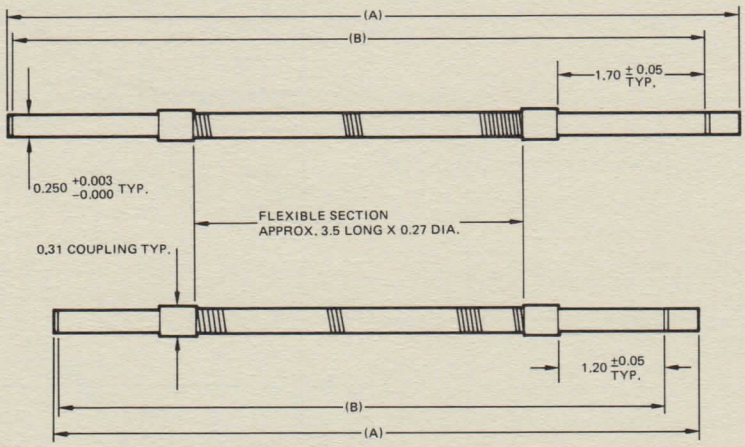

MODEL NUMBER	(A) OVERALL LENGTH (IN)	(B) ACTIVE LENGTH (IN)
1361H–7	7.4 ± 0.3	7.0 ± 0.2
1361H–8	8.4 ± 0.3	8.0 ± 0.2

MOUNTING INFORMATION

Flexibility adds a new dimension in options open to the user of a heat pipe. There are some limitations, however, beyond which a flexible vacuum structure should not be subjected. Continuous flexing within a ±30 degree angle of deflection from the center line of the heat pipe has been successfully tested for over 5,000 cycles. Flexing tests of ±90 degrees from the center line indicate that structural damage can occur after a very few cycles. Upon request, Hughes will provide engineering assistance and mounting recommendations where extreme vibration or continuous flexing is a requirement.

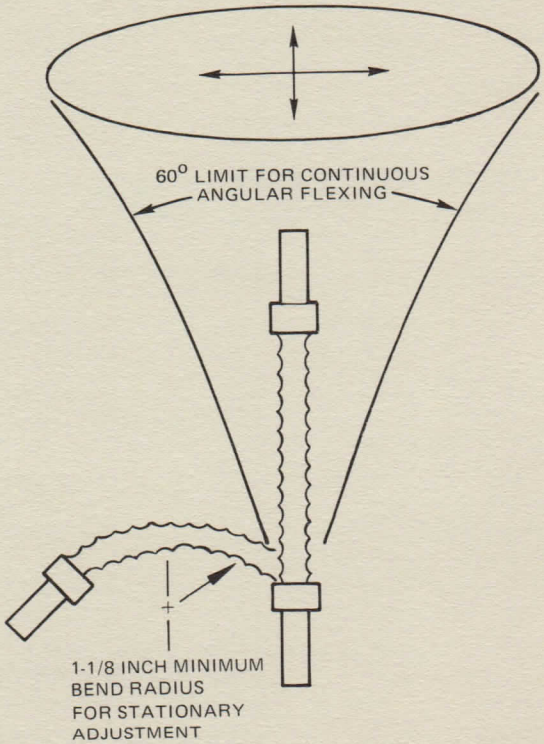

Your Local Representative

HUGHES ELECTRON DYNAMICS DIVISION THERMAL PRODUCTS 3100 West Lomita Boulevard, Torrance, California 90509, Tel (213) 534-2121

HUGHES AIRCRAFT COMPANY

Printed in U.S.A.—3-74

HUGHES

HUGHES AIRCRAFT COMPANY

ELECTRON DYNAMICS DIVISION

HEAT PIPES

"OFF THE SHELF"

1370H SERIES

DESCRIPTION

HUGHES 1370H SERIES of copper and water heat pipes provide passive thermal control for systems which demand high reliability and long life. Typical applications include cooling of circuit cards, TWTs, integrated circuits, solid-state power supplies, missile electronics, electro-optical systems, standard electronic modules (SEMs), and many other space and military thermal control requirements.

THERMAL CHARACTERISTICS:

- Thermal Resistance, R ($\frac{°C\text{-}in^2}{watt}$) 0.63
- Temperature Differential, ΔT (°C) . . . . . .Varies with heat pipe length and test configuration, see examples
- Transport Capacity, Q_oL_o (watt-inches) 760 600 380 228 195 162 76
  At Condenser Tilt (inches) . . . . . .+14 +6 +3 0 -3 -6 -14
- Temperature Range. . . . . .Recommended +50°C to +150°C
  Maximum Limit +200°C

Note – To obtain transport capacity in "watts", calculate as follows: $\frac{Q_oL_o}{L'}$

where L_o and L' = effective length of heat pipe, inches

Q_o and Q' = heat pipe power, watts

Tilt = the vertical height of the condenser end of the heat pipe with respect to the evaporator end

A_o and A' = heat transfer area

T_o and T' = temperature

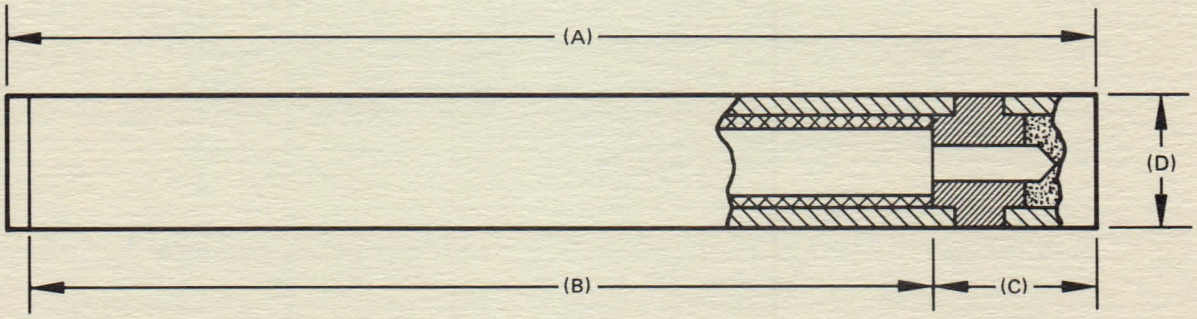

Model No.	(A) Overall Length inches (cm)	(B) Active Length inches (cm)	(C) Pinch-Off Cover inches (cm)	(D) DIAMETER inches (cm)		
				Unground	Ground	Plated
1370H025–6	6.4 (16.26)	6.0 (15.24)	0.32 (0.81)	N/A	N/A	0.25 (0.635)
1370H025–10	10.50 (26.67)	9.77 (24.82)	0.70 (1.78)	0.25 (0.635)	0.244 (0.620)	0.245 (0.622)
1370H025–14	14.23 (36.14)	13.50 (34.29)	0.70 (1.78)	0.25 (0.635)	0.2435 (0.618)	0.245 (0.622)

Note: 1370H025–6 heat pipes are only available nickel plated

1370H025–10 and –14 heat pipes are available unground, ground, or cadmium plated

HEAT PIPES
"OFF THE SHELF"
1370H SERIES

HUGHES
HUGHES AIRCRAFT COMPANY
ELECTRON DYNAMICS DIVISION

DESIGN CONSIDERATIONS:

Heat pipe performance will vary with test set-up conditions. The following example is intended to relate performance as measured in our laboratory set-up with potential user set-ups.

EXAMPLE: Test data as reported in this data sheet is based on the following:

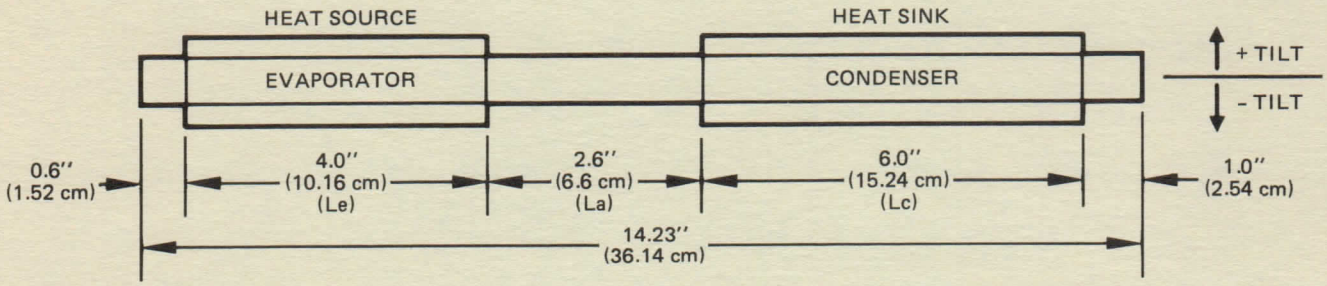

$L_o = \frac{1}{2}Le + La + \frac{1}{2}Lc = [\frac{1}{2}(4) + 2.6 + \frac{1}{2}(6)] = 7.6$ inches

$Q_o L_o = 760$ (at +14 inches condenser tilt)

$Q_o = \frac{760}{7.6} = 100$ watts capacity [For typical electronic applications, Q_o actual = 20 watts]

ΔT of heat pipe surface = $T_{evap.} - T_{cond.}$

$\Delta T_o = [R/A_o]\ Q_o$

$\Delta T_o = \frac{0.63\ (20)}{\pi(0.25)(10)} = 1.6°C$

If the same heat pipe is used in a different arrangement, or a different length heat pipe is used, changes in operation occur. Assume e.g., the following test set-up at a negative 28 degrees rotation from the horizontal, or a tilt of -3 inches:

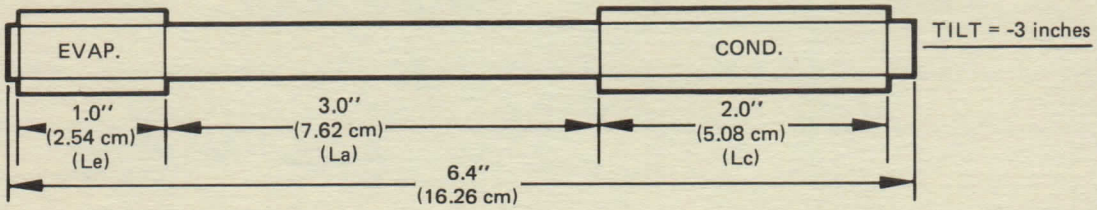

Now, the new L' will be $= [\frac{1}{2}(1) + 3 + \frac{1}{2}(2)]$
$= 4.5$ inches

$Q'L' = Q_o L_o$

$Q' = \frac{Q_o L_o}{L'} = \frac{195}{4.5} = 43.3$ watts capacity

If the heat pipe is subject to 20 watts;
$\Delta T' = [R/A']\ Q'$

$\Delta T' = \frac{0.63(20)}{\pi(0.25)(3)}$

$\Delta T' = 5.3°C$

Note: The above performance predictions do not apply for cases where the condenser or evaporator lengths are less than 0.5 inch. Other effects will come into play which lead to rapid performance degradation.

HUGHES
HUGHES AIRCRAFT COMPANY
ELECTRON DYNAMICS DIVISION THERMAL PRODUCTS 3100 West Lomita Boulevard, Torrance, California 90509, Tel (213) 517-6000

Printed in U.S.A. 2/82

HUGHES

HUGHES AIRCRAFT COMPANY

ELECTRON DYNAMICS DIVISION

1388H

THERMAL DIODE HEAT PIPE

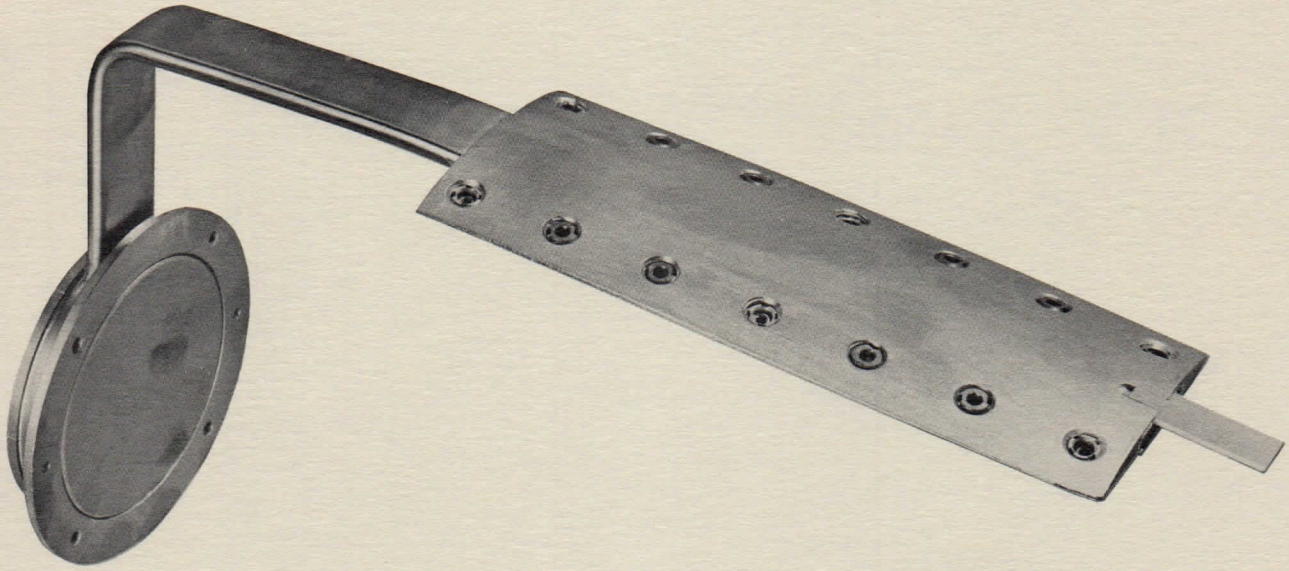

DESCRIPTION

The Hughes Model 1388H Thermal Diode Heat Pipe is a device used for thermal control of airborne missile electronics.

During subsonic flight, the heat pipe cools the missile electronics by transferring waste heat to the skin of the missile and then rejecting it to the atmosphere.

During supersonic flight, the heat pipe passively switches off and acts as a thermal insulator thus protecting the missile electronics from aerodynamic heat.

This passive thermal control device has been fully qualified and successfully flight proven for missile environments.

1388H

THERMAL DIODE HEAT PIPE

HUGHES

HUGHES AIRCRAFT COMPANY

ELECTRON DYNAMICS DIVISION

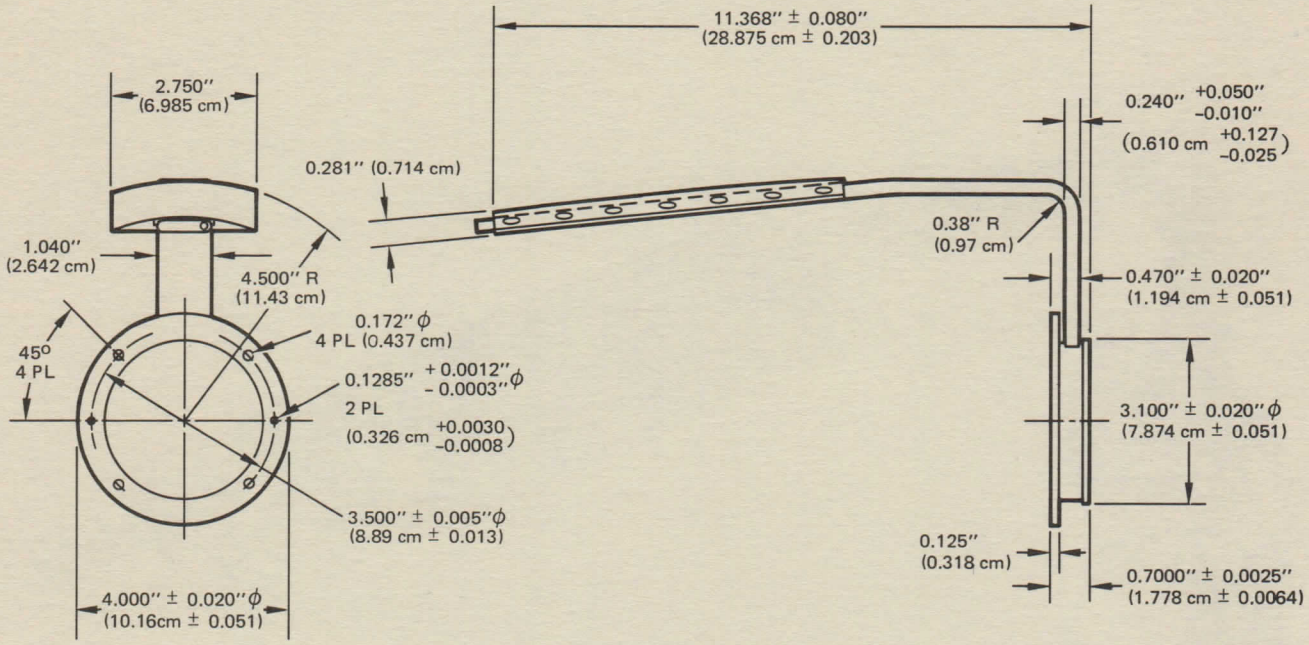

PERFORMANCE SPECIFICATIONS

Performance: The Hughes 1388H heat pipe meets the performance requirements specified below at coolant temperatures of 0°C, 30°C and 77°C.

Heat Carrying Capacity: This unit will carry 150 Watts heat load at any condenser temperature from 0°C to 77°C with a maximum diode evaporator-to-condenser ΔT of 9°C with an axial loading.

Time Response: The heat pipe will achieve its maximum ΔT between evaporator and condenser while carrying a 150 Watt load in less than 90 seconds. Transition from operating to non-operating mode will result in less than a 5°C temperature rise of the evaporator in 120 seconds when attached to a five pound mass aluminum heat sink having a maximum surface area of 300 square inches.

Switching Point: Transition from operating to non-operating will occur when the condenser temperature exceeds the evaporator temperature.

Temperature Ranges: The heat pipe will not show evidence of physical damage or performance degradation when exposed to a temperature range of -45°C to 110°C.

Weight: Less than 2 pounds (0.9 kg).

HUGHES ELECTRON DYNAMICS DIVISION P.O. Box 2999, Torrance, California 90509, Tel (213) 517-6000

HUGHES AIRCRAFT COMPANY

Printed in U.S.A. 4/83 AL

HUGHES

HUGHES AIRCRAFT COMPANY

ELECTRON DYNAMICS DIVISION

7000H

SPLIT-STIRLING COOLER

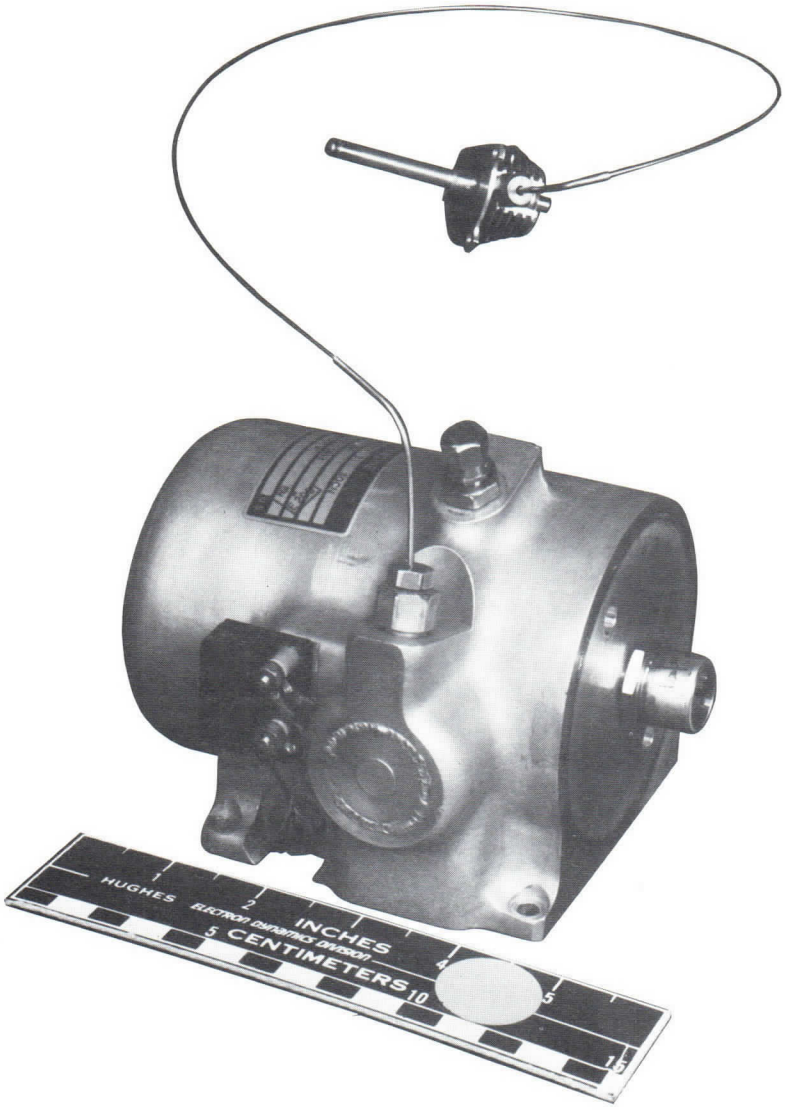

DESCRIPTION

THE HUGHES MODEL 7000H 1-WATT SPLIT-STIRLING CRYOGENIC COOLER is fully qualified to typical U.S. Air Force missile environments.

Key features of this cooler include construction which is hermetically sealed and capable of maintaining a helium charge pressure for a minimum of 10 years.

In addition, this unit is currently in full scale production and is available with either a brush or brushless type DC motor.

7000H
SPLIT-STIRLING COOLER

HUGHES
HUGHES AIRCRAFT COMPANY
ELECTRON DYNAMICS DIVISION

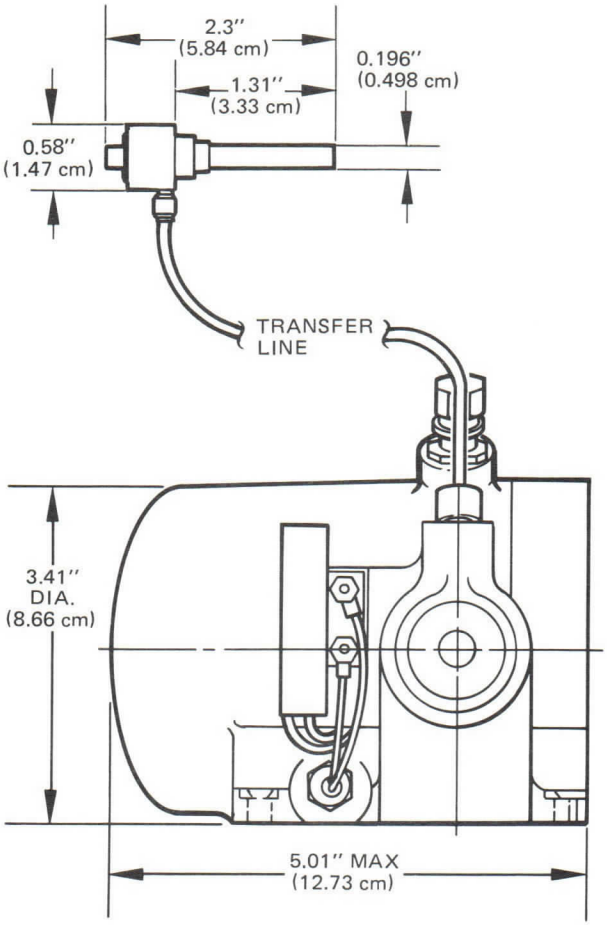

7000H COOLER
TYPICAL AMBIENT TEMPERATURE (23°C)
LOAD CURVES

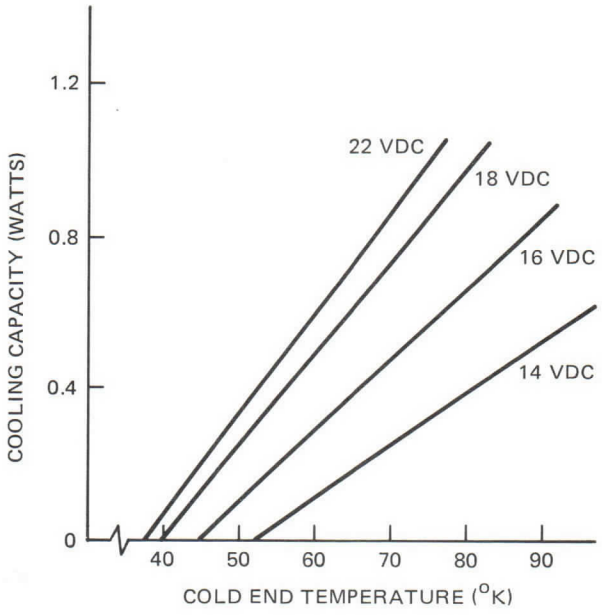

FIGURE 1

CONFIGURATION

7000H-1 . . . . . brush type DC motor
7000H-2 . . . . . brushless type DC motor

PERFORMANCE SPECIFICATIONS*

Cooling Capacity . . . . . see figure 1
Cooldown Time (for typical detector package) . . . . . < 3 minutes
Power Required (typical – 23°C ambient) . . . . . 55 watts @ 0.5 watt load and 74°K
Weight . . . . . < 7 pounds (3.2 kg)
Operating Ambient . . . . . –50°C to +60°C

***Performance specifications noted above are for a transfer line length of 22 inches.**

Special lengths are available upon request.

HUGHES ELECTRON DYNAMICS DIVISION CRYOGENICS DEPARTMENT P.O. Box 2999, Torrance, California 90509, Tel (213) 517-6000
HUGHES AIRCRAFT COMPANY

PRINTED IN U.S.A. 9/83 P/S

HUGHES

HUGHES AIRCRAFT COMPANY

ELECTRON DYNAMICS DIVISION

7009H

INTEGRAL-STIRLING COOLER

DESCRIPTION

THE HUGHES MODEL 7009H ¼-WATT INTEGRAL-STIRLING CRYOENGINE is designed to satisfy the cooling requirements of the standard 60-element U.S. Army common module detector.

Important features of this cooler include a brushless DC motor with commutation electronics fully enclosed within the compressor housing and its highly balanced, low vibration, acoustically quiet operation. These features will benefit system designers in controlling cooler-induced EMI, microphonics, and noise levels.

7009H

INTEGRAL-STIRLING COOLER

HUGHES

HUGHES AIRCRAFT COMPANY

ELECTRON DYNAMICS DIVISION

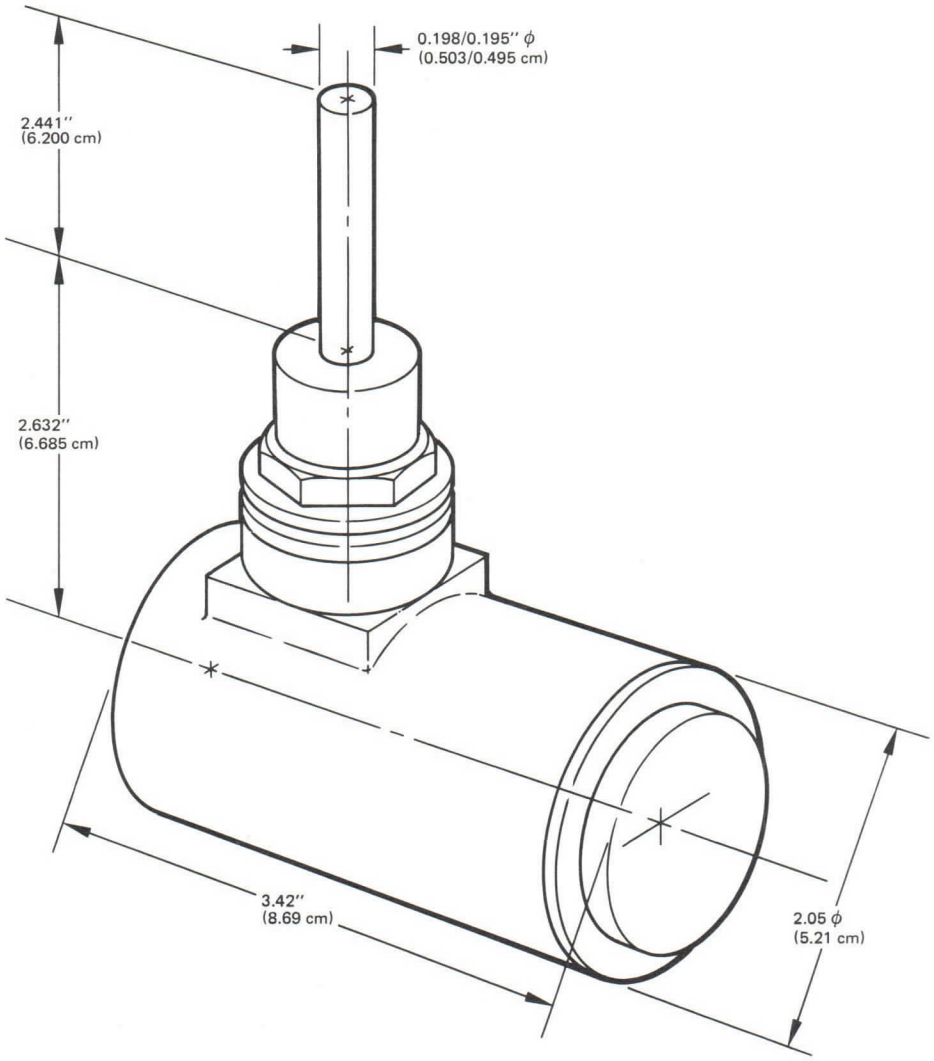

PERFORMANCE SPECIFICATIONS

Cooling Capacity . . . . . 0.3 W minimum @ 80°K and +52° ambient temperature

Cooldown Time . . . . . < 5.5 minutes (120 joules)

Power Required . . . . . < 20 W @ 16.8 VDC

Weight . . . . . ~ 2.1 pounds (0.96 kg)

Operating Ambient . . . . . -40°C to +52°C

HUGHES ELECTRON DYNAMICS DIVISION CRYOGENICS DEPARTMENT P.O. Box 2999, Torrance, California 90509, Tel (213) 517-6000

HUGHES AIRCRAFT COMPANY

Printed in U.S.A. 4/83 P/S

HUGHES

HUGHES AIRCRAFT COMPANY

ELECTRON DYNAMICS DIVISION

7012H

INTEGRAL-STIRLING COOLER

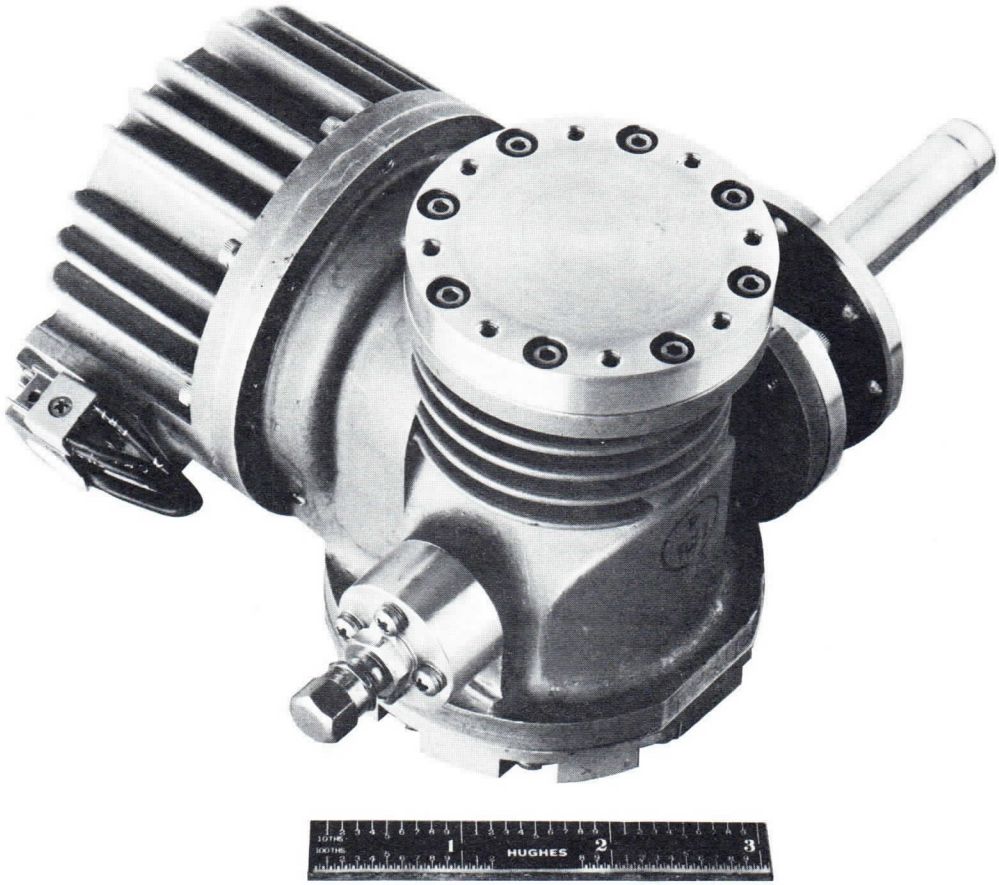

DESCRIPTION

THE HUGHES MODEL 7012H 1-WATT INTEGRAL-STIRLING CRYOGENIC COOLER meets or exceeds the performance and configuration requirements of the U.S. Army "Common Module" cooler specification MIL-C-49175 (HD-1033B/UA).

This particular cooler is currently integrated with Army Common Module Detectors for infrared night sights in tank applications.

Hughes engineering has designed low vibration and acoustically quiet features into these production units.

These units are now available with a choice of two motor configurations. The -1 units have an AC motor while the -2 configuration is available with a brushless DC motor. The performance specifications as outlined on the reverse side are the same for both the -1 and the -2 configuration.

7012H

INTEGRAL-STIRLING COOLER

HUGHES

HUGHES AIRCRAFT COMPANY

ELECTRON DYNAMICS DIVISION

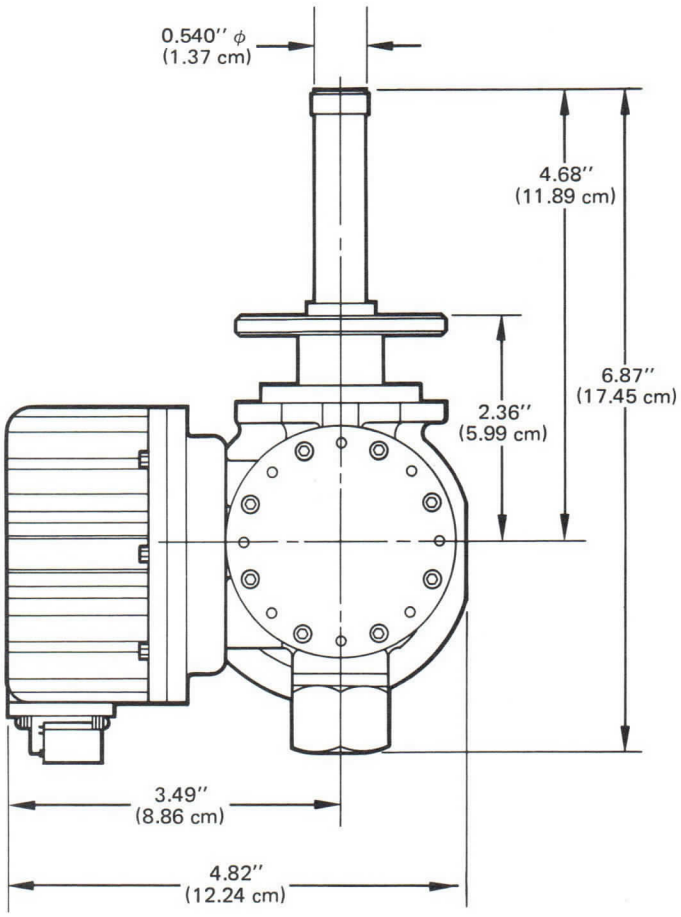

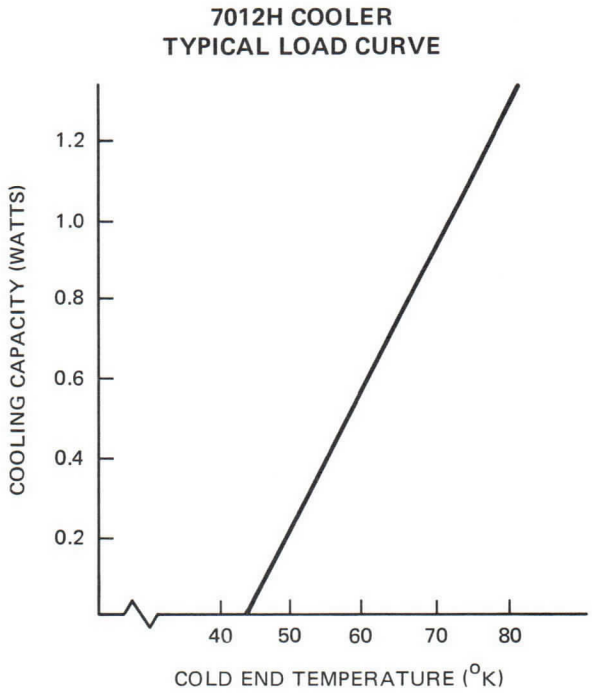

CONFIGURATION

7012H-1 . . . . . .with AC motor

7012H-2 . . . . . with DC brushless motor

PERFORMANCE SPECIFICATIONS

Cooling Capacity. . . . . 1.0 W minimum @ 80°K and room temperature

Cooldown Time (100°K) . . . . . .< 10 minutes (11.2 grams of copper mass)

Power Required. . . . . 50 W maximum

Weight. . . . . 3.7 pounds (1.68 kg)

Operating Ambient . . . . . .-54°C to +71°C

HUGHES ELECTRON DYNAMICS DIVISION CRYOGENICS DEPARTMENT P.O. Box 2999, Torrance, California 90509, Tel (213) 517-6000

HUGHES AIRCRAFT COMPANY

PRINTED IN U.S.A. 11/83 P/S

HUGHES

HUGHES AIRCRAFT COMPANY

ELECTRON DYNAMICS DIVISION

7014H

SPLIT-STIRLING COOLER

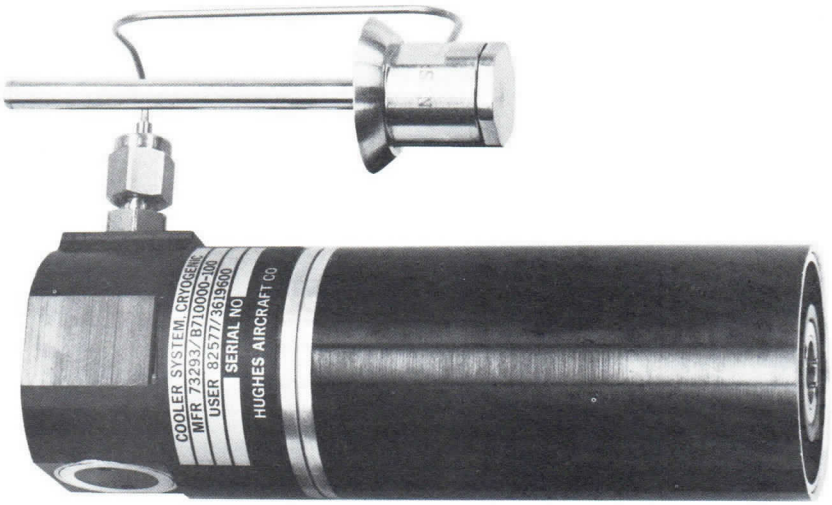

DESCRIPTION

THE HUGHES MODEL 7014H ¼-WATT SPLIT-STIRLING CRYOGENIC COOLER is designated as a "Common Module" cooler which meets or exceeds the performance and configuration requirements of the latest U.S. Army specifications. Typical applications of this cooler include infrared sights for tanks, helicopters, and other military night vision equipment where optimization of weight and size is desirable.

The expander assembly has a unique feature involving a self-aligning flange which allows proper alignment between the cold finger and the dewar. This feature is graphically outlined on the reverse side.

Additional key features include a 17.5 $\pm$ 0.5 VDC brushless motor with hybrid electronics both fully contained within the compressor housing.

7014H
SPLIT-STIRLING COOLER

HUGHES
HUGHES AIRCRAFT COMPANY
ELECTRON DYNAMICS DIVISION

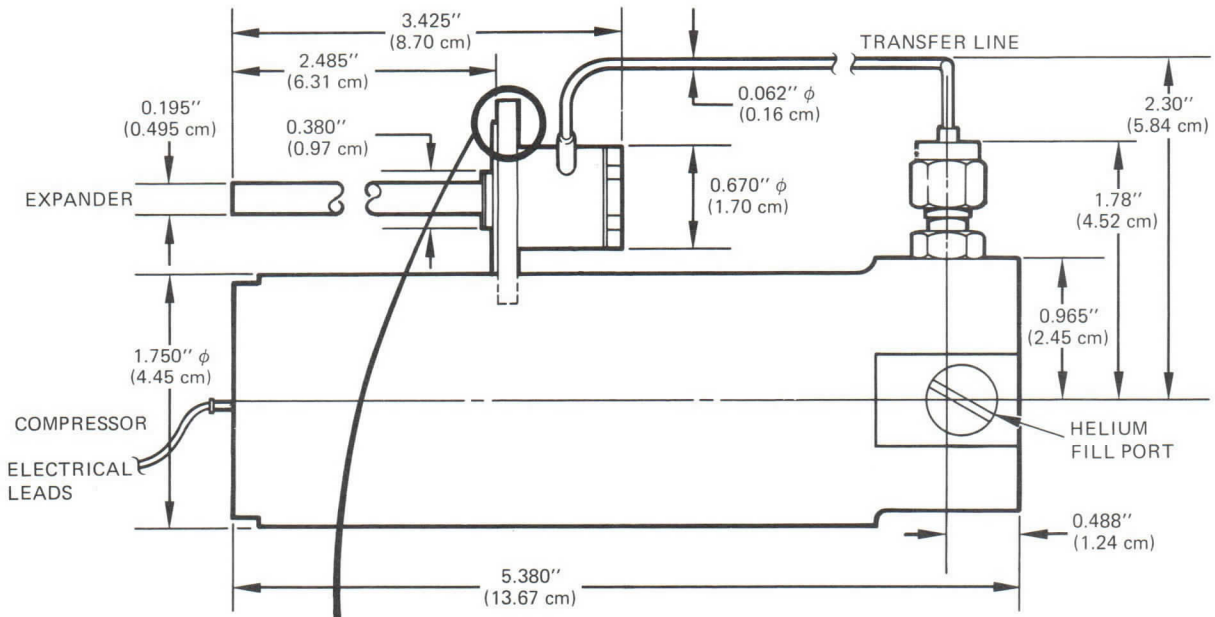

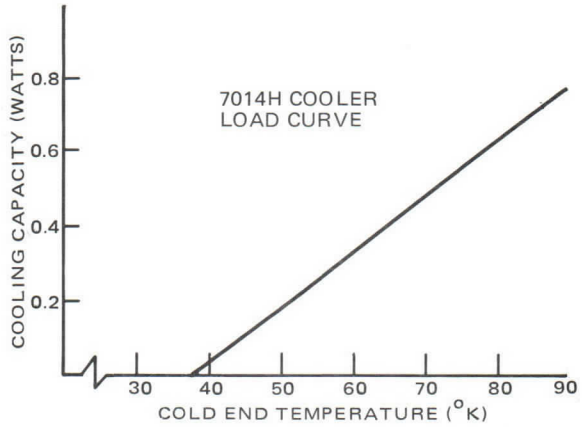

PERFORMANCE SPECIFICATIONS*

Cooling Capacity	0.4 W minimum @ 85°K and room temperature
Cooldown Time	<10 minutes (120 joules)
Power Required	30 W maximum @ 17.5 ± 0.5 VDC
Weight	<2.5 pounds (1.14 kg)
Operating Ambient	-40°C to +71°C

***Performance specifications noted above are for a transfer line length of 6".**
Special lengths are available upon request.

HUGHES ELECTRON DYNAMICS DIVISION CRYOGENICS DEPARTMENT P.O. Box 2999, Torrance, California 90509, Tel (213) 517-6000
HUGHES AIRCRAFT COMPANY

Printed in U.S.A. 11/83 P/S

HUGHES

HUGHES AIRCRAFT COMPANY

ELECTRON DYNAMICS DIVISION

1395H SERIES

Stainless Steel/Ammonia Variable Conductance Heat Pipes for Space Applications

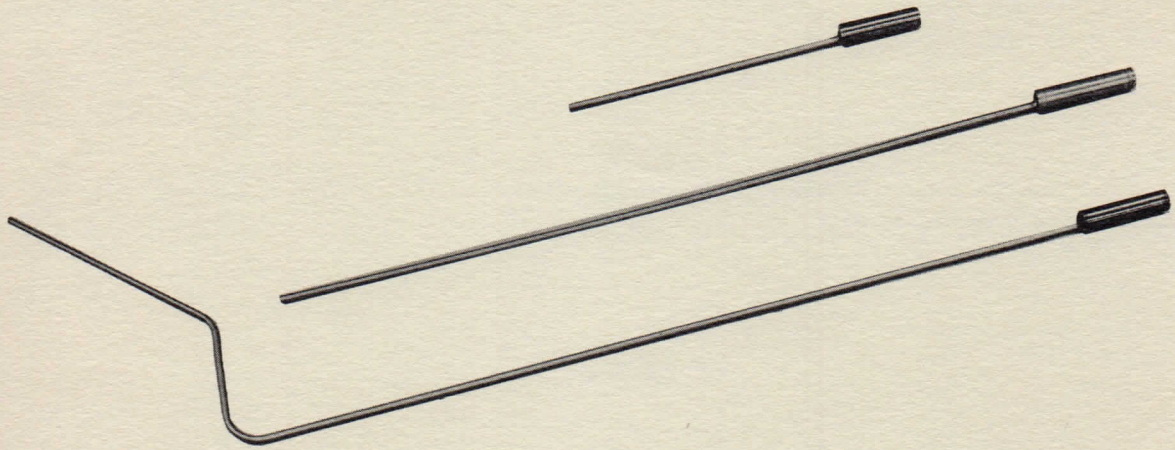

DESCRIPTION

The Hughes 1395H Series of Variable Conductance Heat Pipes was designed for space applications. Heat pipes bridge the gap between thermal conduction and pumped coolants for heat removal from concentrated heat sources, such as in traveling-wave tubes. These variable conductance heat pipes are designed to vary the effective radiator area on a spacecraft as a function of power and heat sink variations. Since heat pipes are passive devices, this is accomplished without the use of moving parts or electronic controls.

The Hughes variable conductance heat pipe is designed for low cost and high reliability. The envelope and wick material is stainless steel offering low thermal conductance in the transition zones for a turn-down ratio on the order of 6,000 to 1. This is done without joining dissimilar materials in the heat pipe wall, and without machining thin-wall sections. The pipe design offers high thermal transport capacity at relatively high tilt angles. This reduces the leveling requirements in spacecraft ground testing, which reduces overall cost.

The heat pipe working fluid is ammonia which has excellent compatibility with stainless steel. The advantage of ammonia over methanol, which may also be used as a working fluid in stainless steel heat pipes, is its higher thermal transport capability over the operating temperature range. Any number of bends may be incorporated into the heat pipe to meet specific design requirements.

SPECIFICATIONS*

Envelope Material	stainless steel
Wick Material	stainless steel
Working Fluid	ammonia
Control Gas	argon (other inert gases may be used)
Thermal Transport Capacity	see typical performance curves
Recommended Operating Range	-103 to +194°F (-75 to +90°C)
Radial Flux Capability	17 W/in^2 (2.6 W/cm^2)**
Thermal Conductance	see table below
Vapor Core Volume (V_C)	0.0445 in^3/in (0.287 cm^3/cm)
Minimum Bend Radius	2.5 in (6.35 cm)
Weight	see table below

*All specifications are subject to change without prior notice.
**Maximum value measured to date.

OUTLINE DRAWING

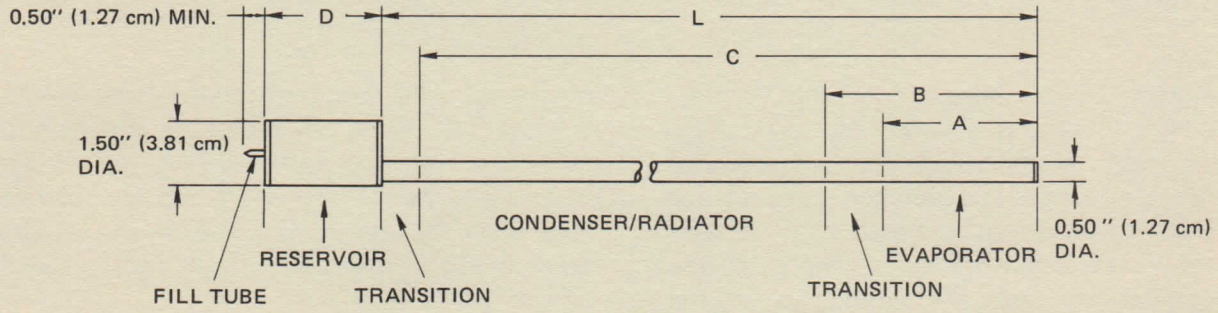

MODEL NO.	L INCHES (METERS)	A INCHES (METERS)	B INCHES (METERS)	C INCHES (METERS)	D INCHES (METERS)	THERMAL CONDUCTANCE (watt/°C)		WEIGHT* POUNDS (Kg)
						FULL-ON	FULL-OFF	
1395H-10	39.4 (1.0)	6.0 (0.15)	7.5 (0.19)	39.0 (0.99)	AS REQUIRED	54	0.014	0.75 (0.34)
1395H-20	59.0 (1.5)	9.5 (0.24)	11.0 (0.28)	58.0 (1.47)	AS REQUIRED	84	0.014	1.10 (0.50)
1395H-30	89.0 (2.25)	18.0 (0.46)	19.5 (0.50)	87.5 (2.22)	AS REQUIRED	152	0.014	1.70 (0.77)

*Weight does not include reservoir.

PERFORMANCE CURVES

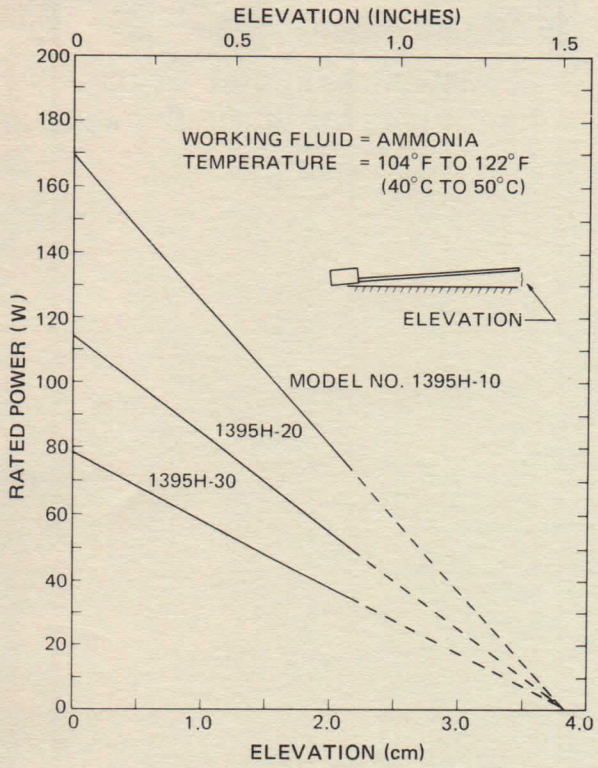

THERMAL TRANSPORT CAPACITY versus ELEVATION

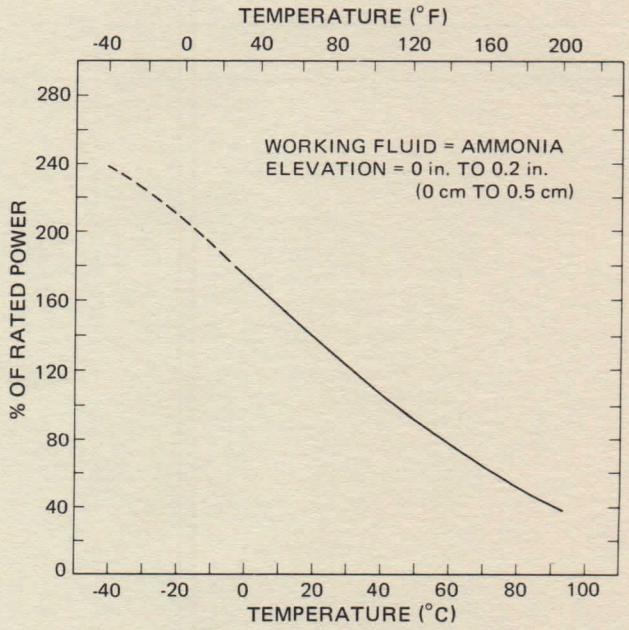

THERMAL TRANSPORT CAPACITY versus TEMPERATURE

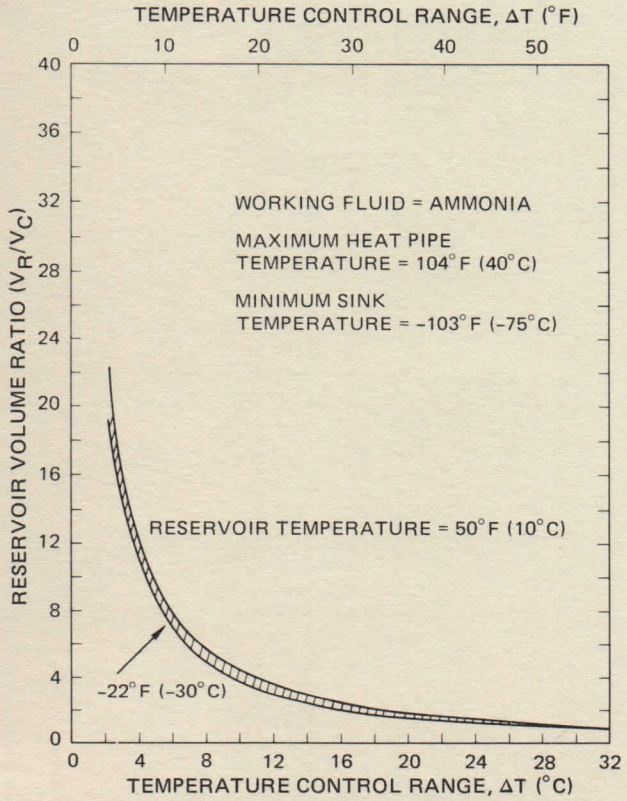

RESERVOIR VOLUME RATIO versus CONTROL RANGE (FIXED RESERVOIR TEMPERATURE)

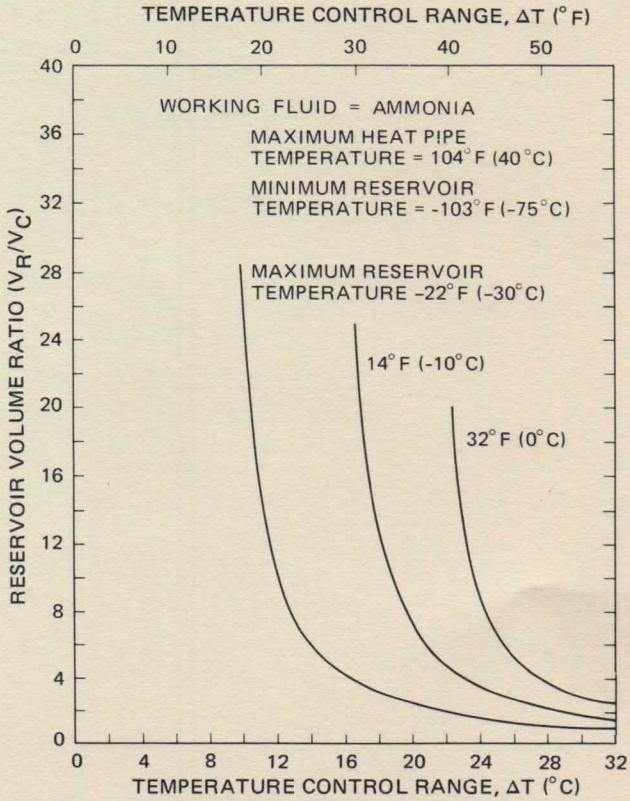

RESERVOIR VOLUME RATIO versus CONTROL RANGE (FLOATING RESERVOIR TEMPERATURE)

HUGHES

HUGHES AIRCRAFT COMPANY

ELECTRON DYNAMICS DIVISION

1395H SERIES

Stainless Steel/Ammonia Variable Conductance Heat Pipes for Space Applications

HUGHES ELECTRON DYNAMICS DIVISION 3100 West Lomita Boulevard, Torrance, California 90509, Tel (213) 534-2121

HUGHES AIRCRAFT COMPANY

Printed in U.S.A.—2/77

COMMUNICATIONS HPAs/TWTs

High Power Amplifiers for Satellite Earth Stations

HUGHES
HUGHES AIRCRAFT COMPANY
ELECTRON DYNAMICS DIVISION

Introduction to EDD

Hughes Aircraft Company, Electron Dynamics Division, is an established leader in the development and manufacture of Traveling-Wave Tubes (TWT's), Traveling-Wave Tube Amplifiers, and Subsystems for military, space, and commercial communications. Since the late 1950's, this division has developed technologies and hardware at the component and subsystem levels to meet the most demanding requirements of virtually every type of communication, radar, and ECM systems.

In earlier days, technologies and resources were devoted to space and high power military TWT applications. More recently, increased efforts have been devoted to high reliability space qualified TWT Amplifiers (TWTA's) and power amplifiers for use in satellite earth stations. Today, Electron Dynamics Division offers a wide range of TWT's, power amplifiers, and subsystems meeting the performance and interface requirements for satellite uplink service. Its products range from smaller amplifiers for use in remote earth terminals to redundant high power amplifier subsystems and multi-kilowatt TWT's for major, high traffic density, earth stations. Current and past programs include: Syncom, ATS, DSCS II & III, INTELSAT IV AND V, RCA SATCOM, TDRSS, SBS, CTS, JCS, HT/MT, OTS, ANIK, SBS, Alaska, Indonesia, Brazil, and Space Shuttle. Our customers are major system manufacturers, common carriers, Government agencies, and satellite system operators around the world.

We invite you and your company to lean on the leader in TWT and power amplifier technology to meet your satellite communication TWT and subsystem requirements.

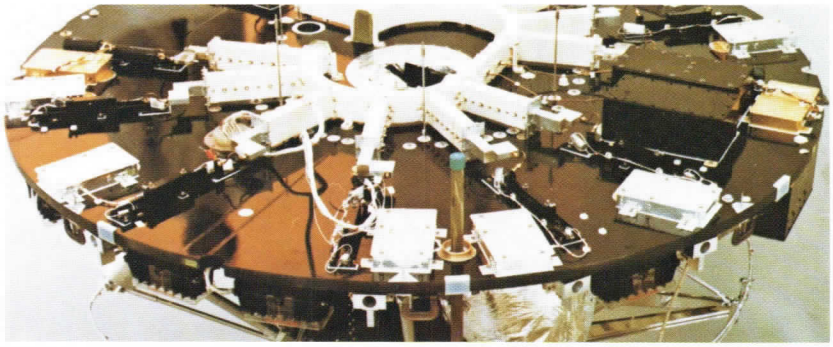

Satellite Transponder Shelf Space qualified traveling wave tubes and amplifiers mounted on the communication shelf of a typical domestic satellite.

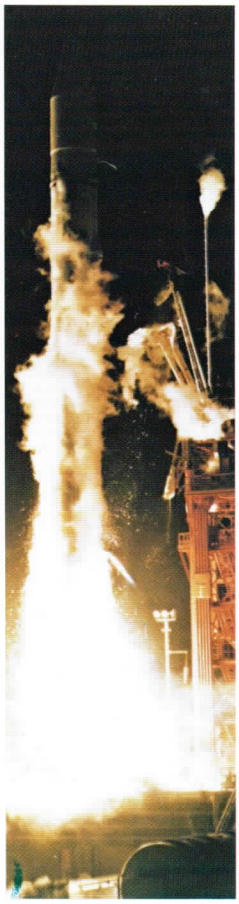

(far left and center) Launch of Communications Satellites into synchronous orbits 22,000 miles above the Equator. Typically include 12 to 24 space qualified TWT amplifiers.

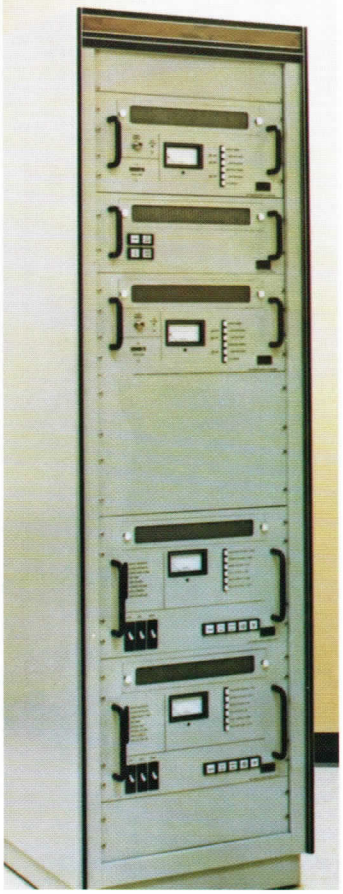

(left) **Model 9740H02** Typical Redundant High Power Amplifier Subsystem including two (2) 400 Watt HPA's and a redundant control unit to facilitate switch over from an on-line amplifier to stand-by amplifier.

(below) Communications satellites undergoing final checkout. Contain primary communication platforms and support functions.

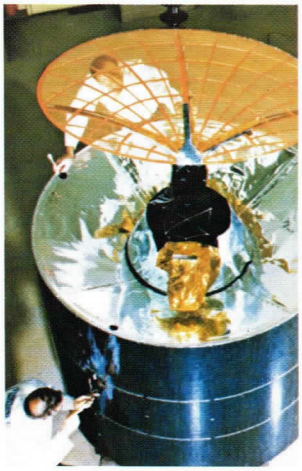

Two decades of leadership

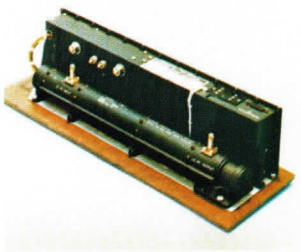

Model 1288H Space qualified traveling-wave tube amplifier. Includes electronic power conditioner, TWT, and interface circuitry in a light weight (3.75 pounds) package. This 5W, 4 GHz TWTA has a design life of seven years. Forty-eight of the amplifiers are currently in orbit providing domestic communication service.

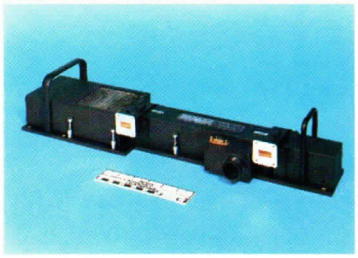

Model 881H TWT. This helix TWT features PPM focusing, air cooling and provides greater than 250 watts of RF output power at 14.0 to 14.5 GHz. The depressed collector improves efficiency and reduces heat dissipation. Its unique design permits operations in stand-by with reduced heater power and provides long life with field replacement without power supply adjustments.

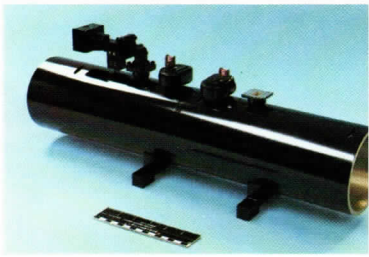

Model 876H TWT. 700 watt coupled cavity traveling-wave tube at 14.0 to 14.5 GHz. A PPM focused, air cooled TWT for satellite earth terminals. Efficiency greater than 40%. Consertive design and dual ion pumps insure long operational and shelf life.

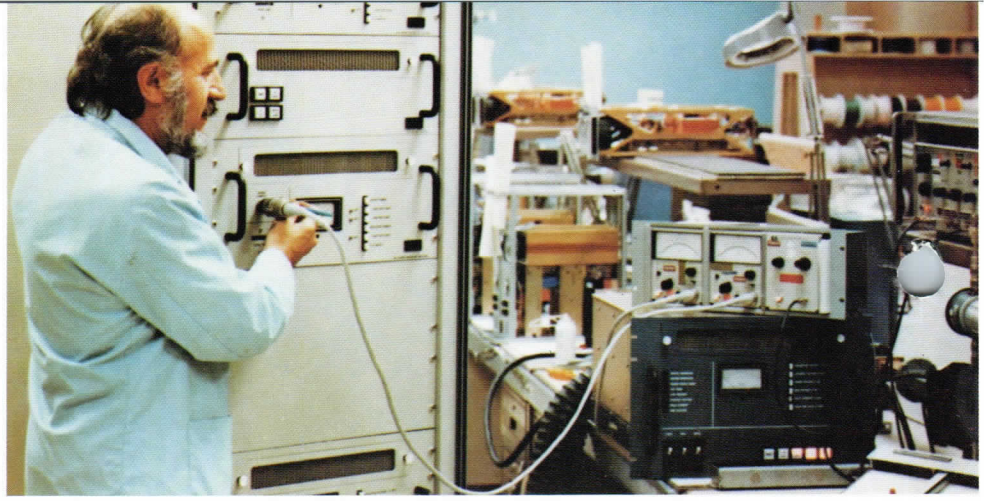

Final acceptance testing is performed to standard procedures or a customer approved ATP.

Model 9740H02 All Hughes power amplifiers and subsystems offer a wide range of features and configurations to meet individual requirements. Subsystem operation and control can use a single "one button" approach or via a local or remote panel offering a number of alarms, controls, and diagnostic features. Also available in "fail soft," power combined configuration.

(above) Extensive Environmental testing is performed on all communication amplifiers and subsystems to verify design and performance.

(immediate right) RF, power supply, and subsystem assembly and integration require special skills and experience to ensure a quality and reliable end product.

Lean on the leader for high power amplifiers

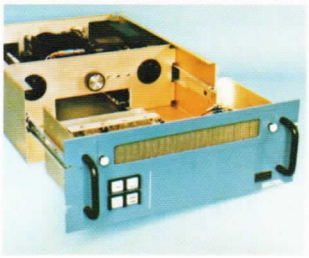

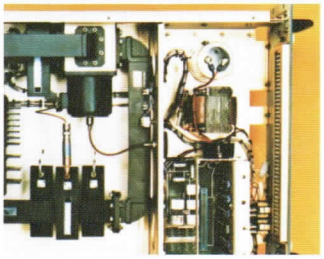

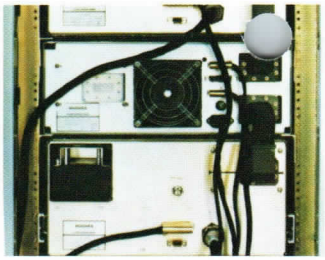

Two (2) high power amplifiers are easily integrated with a redundant control unit to provide automatic, manual, or remote selection of the on-line amplifier. This unit, shown without optional power monitor, features a removable subchassis for servicing and manual control of its waveguide transfer switch.

Complete subsystem integration services are offered prior to delivery. A "drop-in" subsystem simplifies earth station integration.

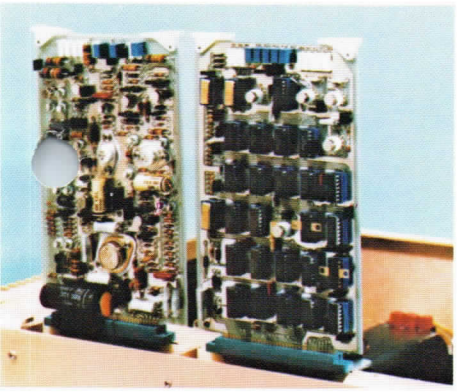

Use of modules and removable printed circuit boards enhances HPA's serviceability.

(below) Routine maintenance and servicing of HPA's and Subsystems requires a high degree of accessibility. Slide mounted chassis and sub-chassis reduces MTTR and permits on-line adjustments of many functions.

Documentation and Design flexibility are required to meet specific systems requirements. Deviations from standard configurations may include adding a set of relay contacts, addition of a motor driven attenuator, a remote control panel, RF power combining, etc.

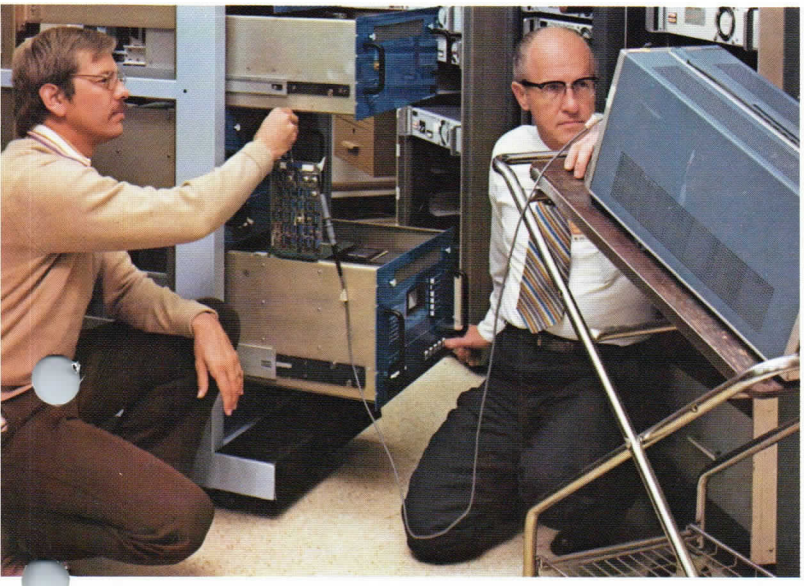

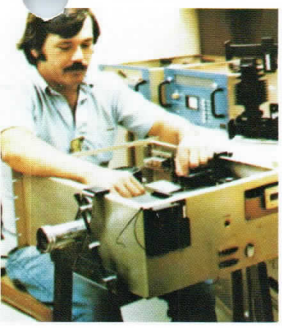

(left) An electronic power conditioner is integrated with an RF unit to form this 400 Watt High Power Amplifier. Remote and local monitor, alarm, and control function offered by the Model 9240H02 simplify system integration.

(second left) TWT's are assembled in special clean room areas.

(third left) Trained technicians and craftsmen insure the highest quality RF assemblies.

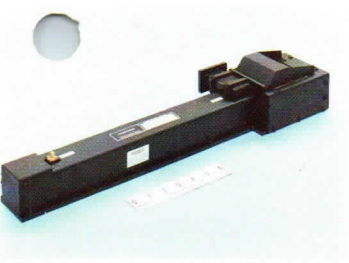

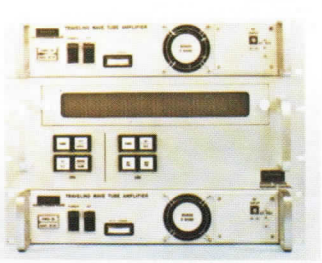

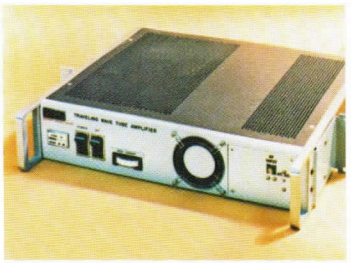

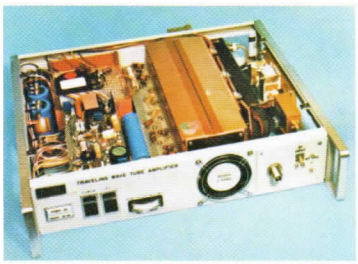

Model 662H TWT. This helix traveling-wave tube features the Hughes all metal ceramic construction. This PPM focused, air cooled TWT offers, like other Hughes communication tubes, a modulating anode for fast turn on/off of beam power for control and fault protection. Electrical and mechanical characteristics are similar to the Model 881H making both tubes compatible with a single power supply design. The 662H provides 400 watts of CW RF power over 5.925-6.425 GHz.

Model 9640H02 Low power amplifiers and redundant subsystems are designed for use in small or low traffic density earth terminals. Controls for LNA redundancy have been added to this subsystem to simplify the customers system integration.

Model 9040H02 Many small earth terminals require custom power amplifier configurations for remote or bush type satellite systems. Actual field experience has shown MTBF to be greater than 50,000 hours.

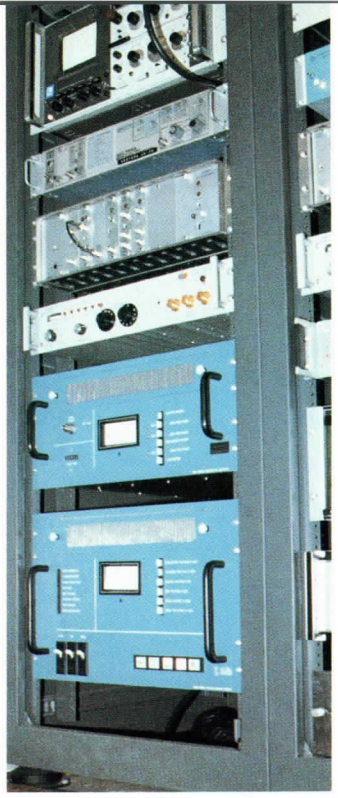

(far left) A small bush terminal in Kiana, Alaska, is one of more than 100 similar earth stations using a compact, Hughes built, 40 Watt power amplifier.

(left) Hughes 400 watt, 6 GHz HPA provides video up-link service in transportable earth terminal.

(below) Large earth stations such as the DCL site in Maryland use the Hughes 400 Watt TWT's and high power amplifiers.

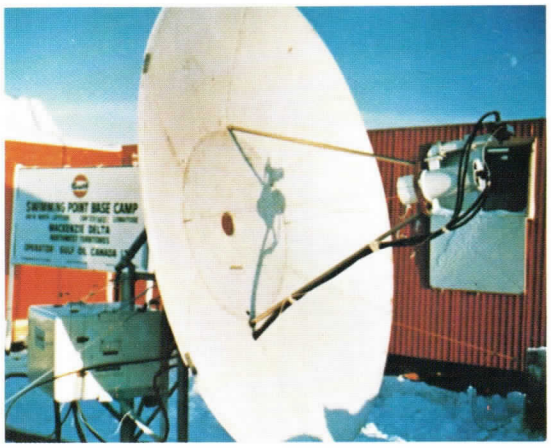

(above) A 14 GHz power amplifier provides 20 Watts of RF output for this transportable terminal. The small power amplifier is housed in a weatherized housing adjacent to the antenna and controlled in a remote panel.

(second from top) Small transportable earth terminals using the Hughes power amplifiers are used for oil exploration in Canada.

Proven around the world

Model 1273H. Electronic Power Conditioner (EPC) offers special controls and logic interfaces for 14 GHz RF terminals. TWT voltages are programmed by the tubes permitting field replacement without power supply adjustment. This three phase, 2 KVA power supply weighs less than 85 pounds.

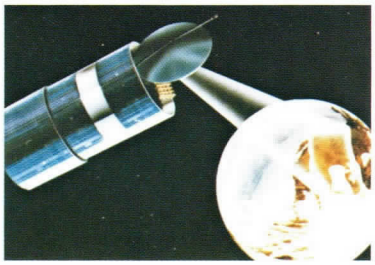

Over 200 Hughes power amplifiers operating at 14 GHz will soon be used for satellite distribution of business telephoning, data, and video communication throughout North America.

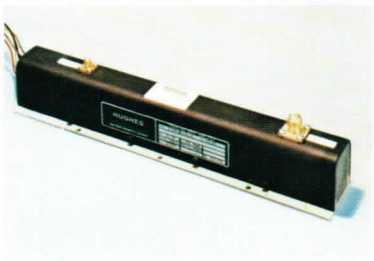

Lower power traveling-wave tubes are often required for small or "thin route" earth terminals. This 50 Watt 6 GHz TWT has an MTBF of greater than 170,000 hours based on a 90% confidence factor in actual field experience.

HUGHES
HUGHES AIRCRAFT COMPANY
ELECTRON DYNAMICS DIVISION
3100 West Lomita Boulevard, Torrance, California 90509, Tel. (213) 534-2121

HUGHES

HUGHES AIRCRAFT COMPANY

ELECTRON DYNAMICS DIVISION

662H

400 W 5.925-6.425 GHz CW TWT

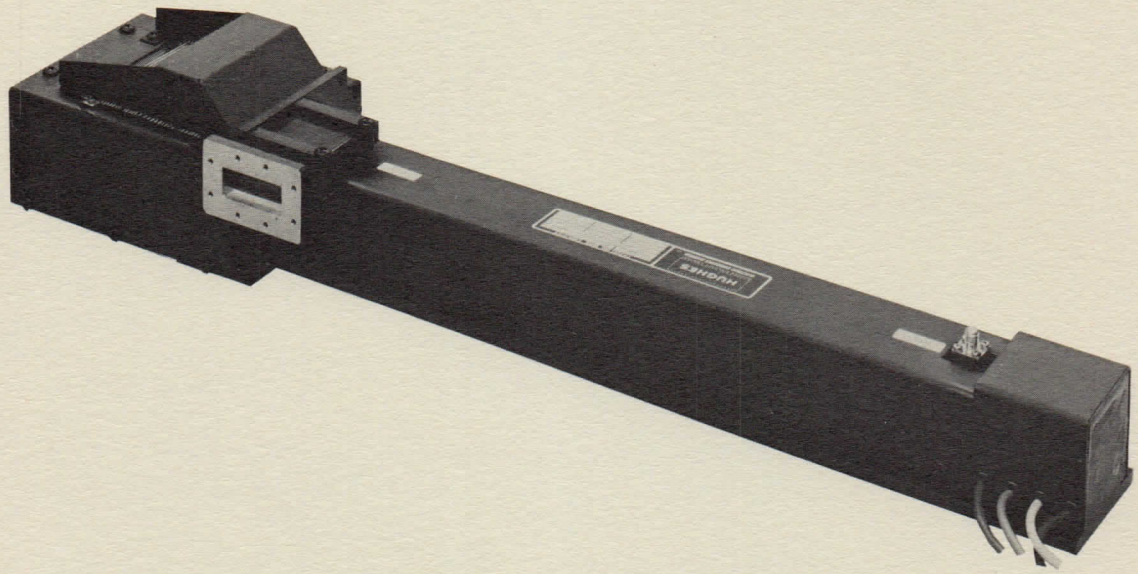

DESCRIPTION

The Hughes Model 662H traveling-wave tube is designed for use in satellite earth terminal transmitters. It is capable of more than 400 watts of CW RF output power over the frequency range of 5.925 to 6.425 GHz. Design and construction of this tube is based on Hughes' experience in the production of high power CW tubes (output powers greater than 1000 watts) and space qualified communications tubes that have won world-wide recognition for quality and reliability. The tube is constructed of metal-ceramic with PPM focusing and forced-air cooling. A modulating anode is utilized for fast turn-on and turn-off of beam current during normal operating sequencing and under fault conditions.

A standard "Pierce" design is used for the electron gun and the collector is a single stage depressed type incorporating integral fins for flow-through forced-air cooling. Alnico VIII magnets provide the focusing field. The helix circuit is supported on three beryllia support rods that are coated at their center sections with pyrolytic carbon to provide exceptional gain stability. The helix rod and support assembly is mounted in a barrel incorporating integral pole pieces for the periodic magnet focusing system. Compression contact between the barrel, rods and helix provides an excellent heat transfer path from the helix to the tube body. The tube body is conduction-cooled via its base-plate support.

The Model 662H offers a low profile package with heat deflectors for horizontal or vertical air flow (input and output). A threaded insert is provided at the tube collector for a thermal sensor. Detailed communication performance characteristics and test data are available upon request.

SPECIFICATIONS*

RF

Frequency	5.925-6.425 GHz minimum
Power Output	400 W minimum
Duty Cycle	CW
Bandwidth	500 MHz minimum
Gain at Rated Power Output	40 dB minimum
Gain at 100 W Power Output	45 dB minimum
Gain Variation	±0.8 dB maximum, 500 MHz
Gain Slope	0.05 dB/MHz maximum
Noise Figure	35 dB maximum
AM/PM Conversion	5°/dB maximum
Spurious Outputs	-70 dBc minimum
Phase Sensitivity	0.75°/V nominal
Input VSWR	2.0:1 maximum
Load VSWR	1.5:1 maximum for specification compliance. 2.0:1 maximum without damage
Harmonic Output	-10 dBc maximum at rated output power
Efficiency	25% nominal

ELECTRICAL

Heater Current	2.0 maximum
Heater Voltage	6.3 V nominal
Cathode Voltage (EK)	-7.5 to -8.3 kVdc
Cathode Current (IK)	420 mA maximum
Anode Voltage (Ea)	100-400 Vdc
Anode Current (Ia)	1.0 mA maximum
Body Current (Helix Current, Iw)	20 mA maximum
Collector Voltage (Eb)	50% ±5% of cathode voltage (EK)
Collector Current (Ib)	420 mA maximum

MECHANICAL

Size	see outline drawing
Weight	10 pounds (4.5 kg) nominal
Input Connector	SMA (female)
Output Connector	CMR-137F W/G flange
Power Connectors	Alden type 8112M (2) or flying leads
Cooling	forced air

ENVIRONMENTAL

Operating	
Temperature Range	0-50°C
Altitude	up to 10,000 feet (3.05 km)
Non-Operating	
Temperature	-50°C to +85°C
Altitude	up to 50,000 feet (15.25 km)

*Subject to change without notice.

TYPICAL PERFORMANCE CURVE

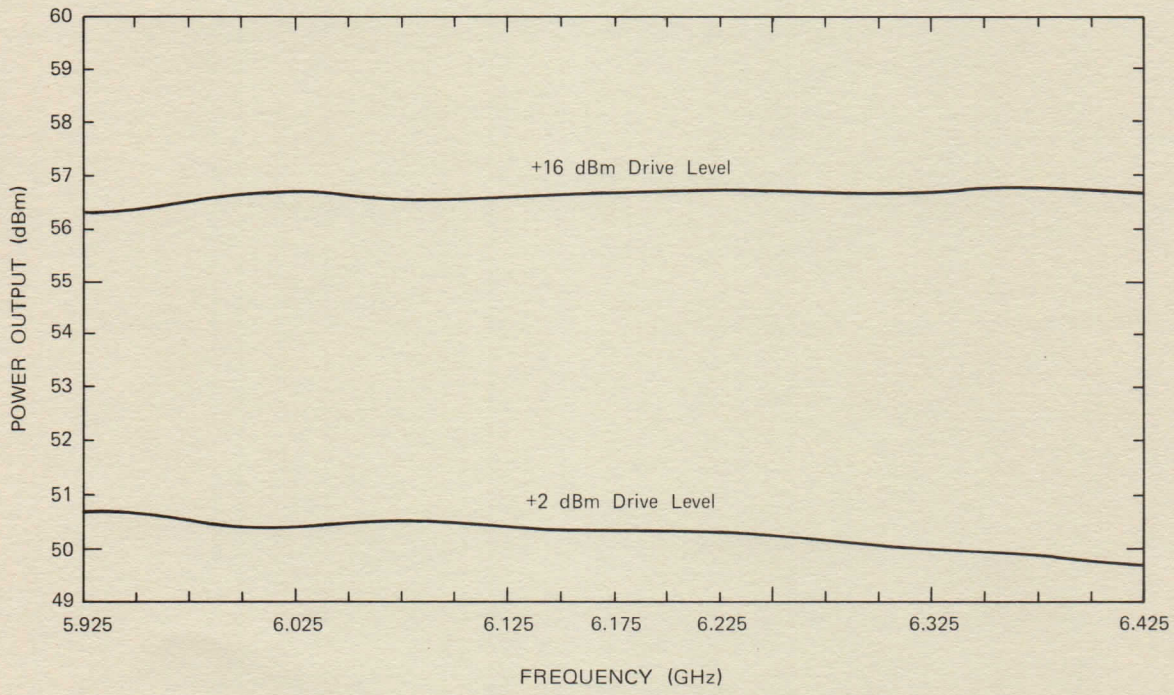

TYPICAL POWER OUTPUT VERSUS FREQUENCY

662H

400 W 5.925-6.425 GHz CW TWT

HUGHES

HUGHES AIRCRAFT COMPANY

ELECTRON DYNAMICS DIVISION

OUTLINE DRAWING

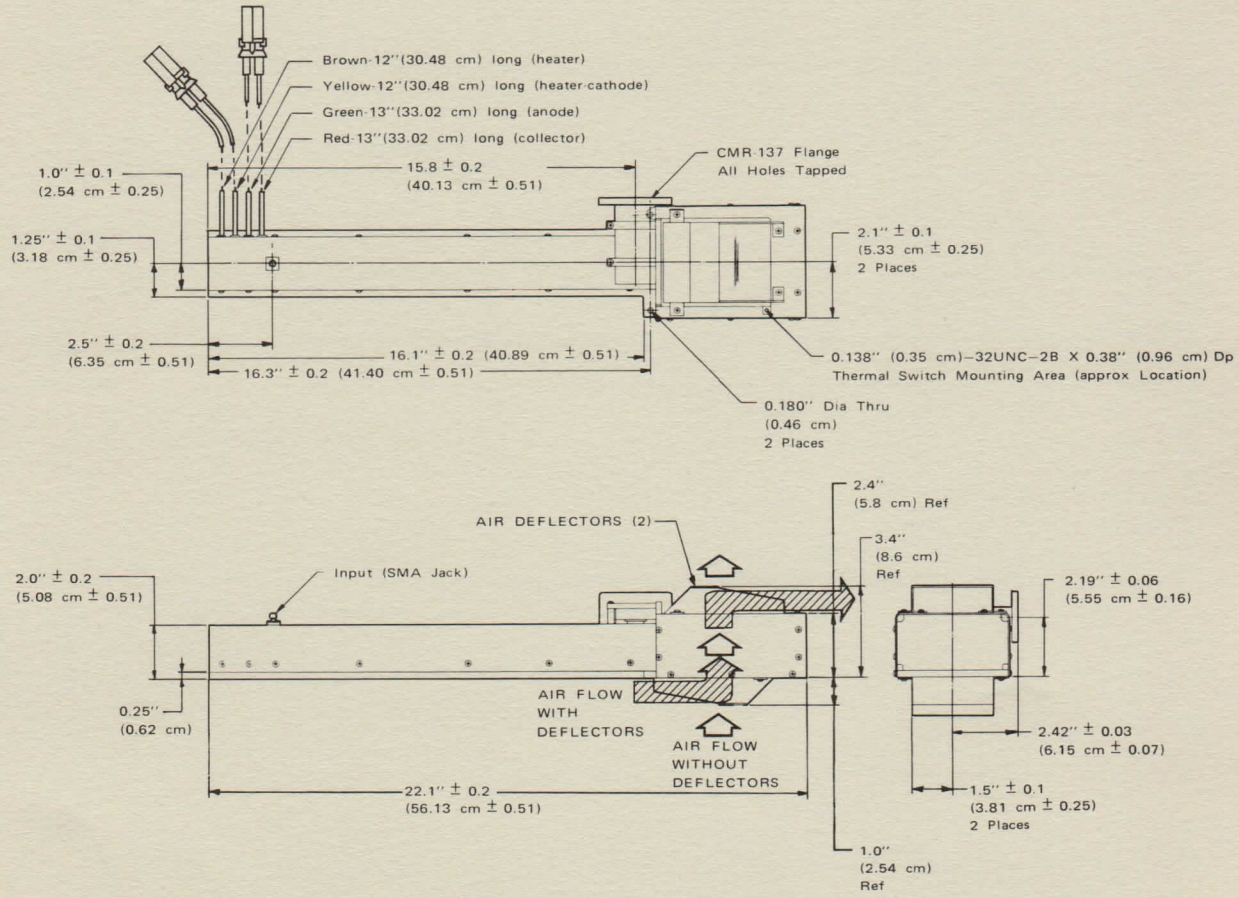

Your Local Representative:

HUGHES ELECTRON DYNAMICS DIVISION MICROWAVE TRAVELING-WAVE TUBE PRODUCTS 3100 West Lomita Boulevard, Torrance, California 90509, Tel (213) 534-2121

HUGHES AIRCRAFT COMPANY

Printed in U.S.A. 4-79 AL

HUGHES

HUGHES AIRCRAFT COMPANY

ELECTRON DYNAMICS DIVISION

677H

125 W 5.925-6.425 GHz CW TWT

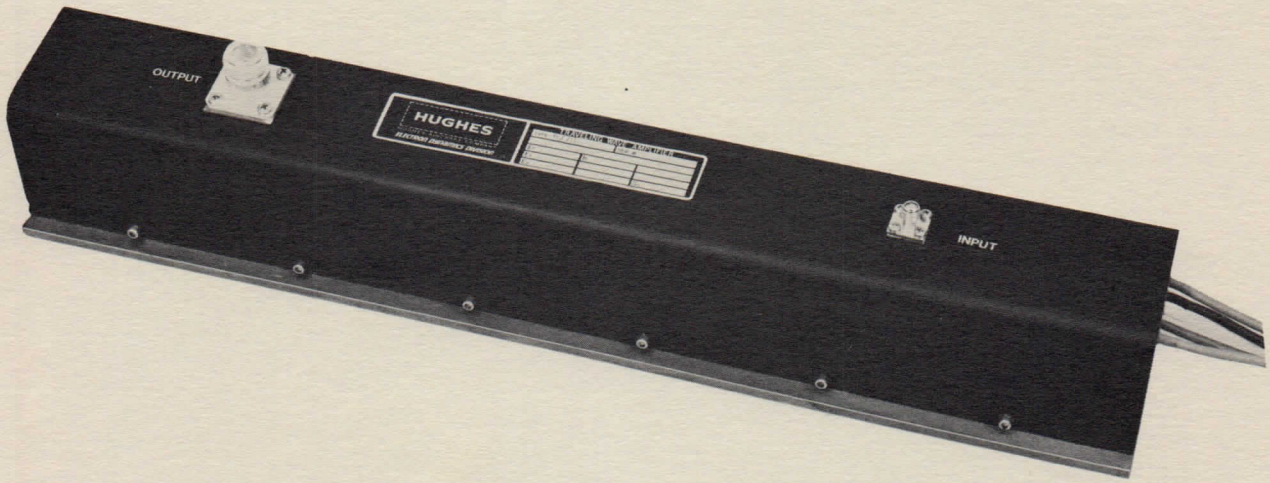

DESCRIPTION

The Hughes Model 677H traveling-wave tube is designed for use in satellite earth terminal transmitters. It is capable of more than 125 watts of CW RF output power over the frequency range of 5.925 to 6.425 GHz. Design and construction of this tube is based on Hughes' experience in the production of space qualified communications tubes that have won world-wide recognition for quality and reliability. The tube is constructed of metal-ceramic with PPM focusing and conduction cooling. A modulating anode is utilized for fast turn-on and turn-off of beam current during normal operating sequencing and under fault conditions.

A standard "Pierce" design is used for the electron gun and the collector is a single stage depressed type with conduction cooling to the baseplate. Alnico VIII magnets provide the focusing field. The helix circuit is supported on three beryllia support rods that are coated at their center sections with pyrolytic carbon to provide exceptional gain stability. The helix rod and support assembly is mounted in a barrel. Compression contact between the barrel, rods and helix provides an excellent heat transfer path from the helix to the tube body.

The Model 677H offers a low profile package with coaxial input and output RF connectors. Detailed communication performance characteristics and test data are available upon request.

SPECIFICATIONS*

RF

Frequency	5.925–6.425 GHz minimum
Power Output	125 W minimum
Duty Cycle	CW
Bandwidth	500 MHz minimum
Gain at Rated Power Output	42 dB minimum
Gain at 10 W Power Output	49 dB minimum
Gain Stability	±0.1 dB/24 hrs
Gain Variation (peak-to-peak)	2.0 dB maximum, 500 MHz
Gain Slope	0.03 dB/MHz maximum/36 MHz
Group Delay	
Linear	0.1 nsec/MHz
Parabolic	0.05 nsec/MHz^2
Ripple	1.0 nsec (pk - pk)
Noise Figure	35 dB maximum
AM/PM Conversion	4.5°/dB maximum
Spurious Outputs	-70 dBc minimum
Phase Sensitivity (cathode)	1.0°/V nominal
Amplitude Sensitivity (cathode)	0.015 dB/V nominal
Input VSWR	2.0:1 maximum
Load VSWR	1.5:1 maximum for specification compliance. 2.0:1 maximum without damage
Harmonic Output	-10 dBc maximum at rated output power
Efficiency	25% nominal
Intermodulation 2 Equal Carriers @ 36 dBm	-25 dBc

ELECTRICAL

Heater Current	2.0 A maximum
Heater Voltage	6.3 ± 0.3 V nominal
Cathode Voltage (EK)	5.8 to 6.4 kVdc
Cathode Current (IK)	170 mA maximum
Anode Voltage (Ea)	100–400 Vdc
Anode Current (Ia)	1.5 mA maximum
Body Current (Helix Current, Iw)	10 mA maximum
Collector Voltage (Eb)	52% ± 2% of cathode voltage (EK)
Collector Current (Ib)	170 mA maximum

MECHANICAL

Size	see outline drawing
Weight	7.5 pounds (3.4 kg) nominal
Input Connector	SMA (female)
Output Connector	type N (female)
Power Connectors	flying leads
Cooling	130 CFM forced air @ sea level

ENVIRONMENTAL

Operating	
Temperature Range (base plate)	0 - 110°C
Altitude	up to 10,000 feet (3.05 km)
Non-Operating	
Temperature	-40°C to +70°C
Altitude	up to 50,000 feet (15.25 km)

*Subject to change without notice.

TYPICAL PERFORMANCE CURVES

TYPICAL SMALL SIGNAL GAIN VS. FREQUENCY

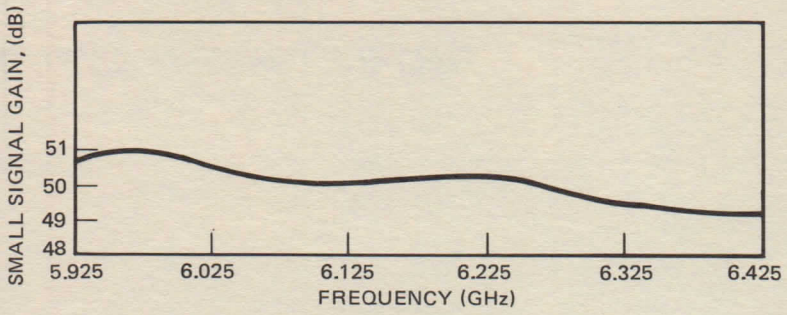

TYPICAL POWER OUTPUT VS. FREQUENCY

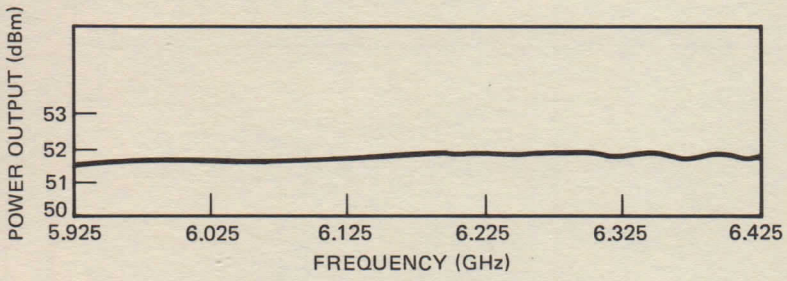

TYPICAL INTERMODULATION DISTORTION

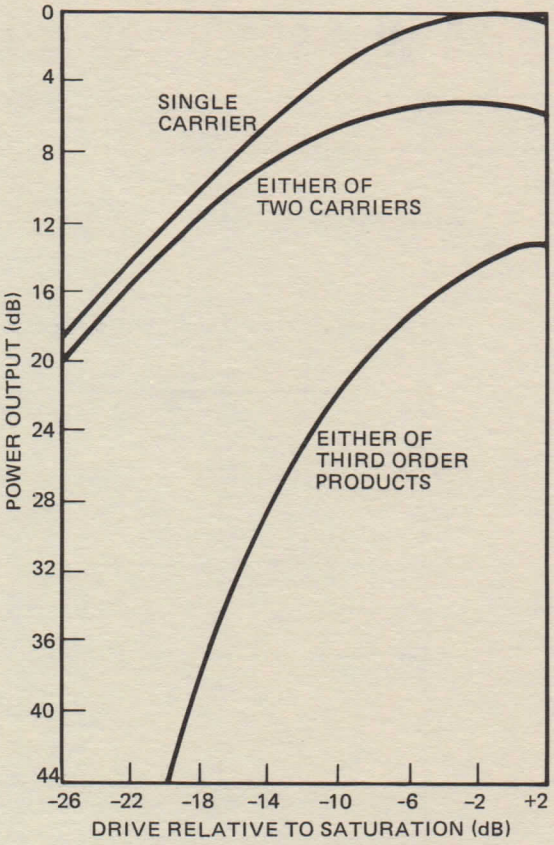

TYPICAL PHASE VARIATION WITH RF INPUT DRIVE

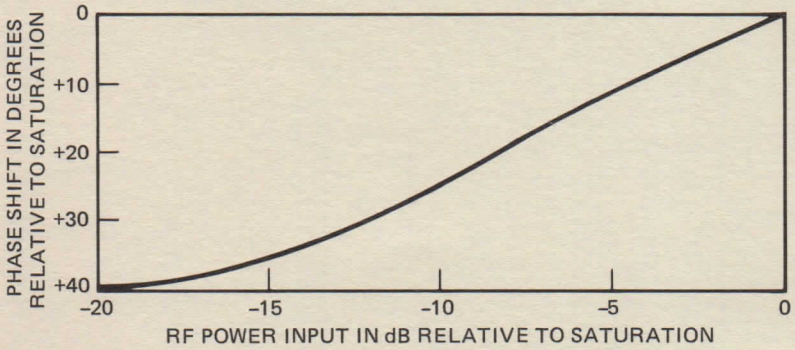

677H

125 W 5.925-6.425 GHz CW TWT

HUGHES

HUGHES AIRCRAFT COMPANY

ELECTRON DYNAMICS DIVISION

OUTLINE DRAWING

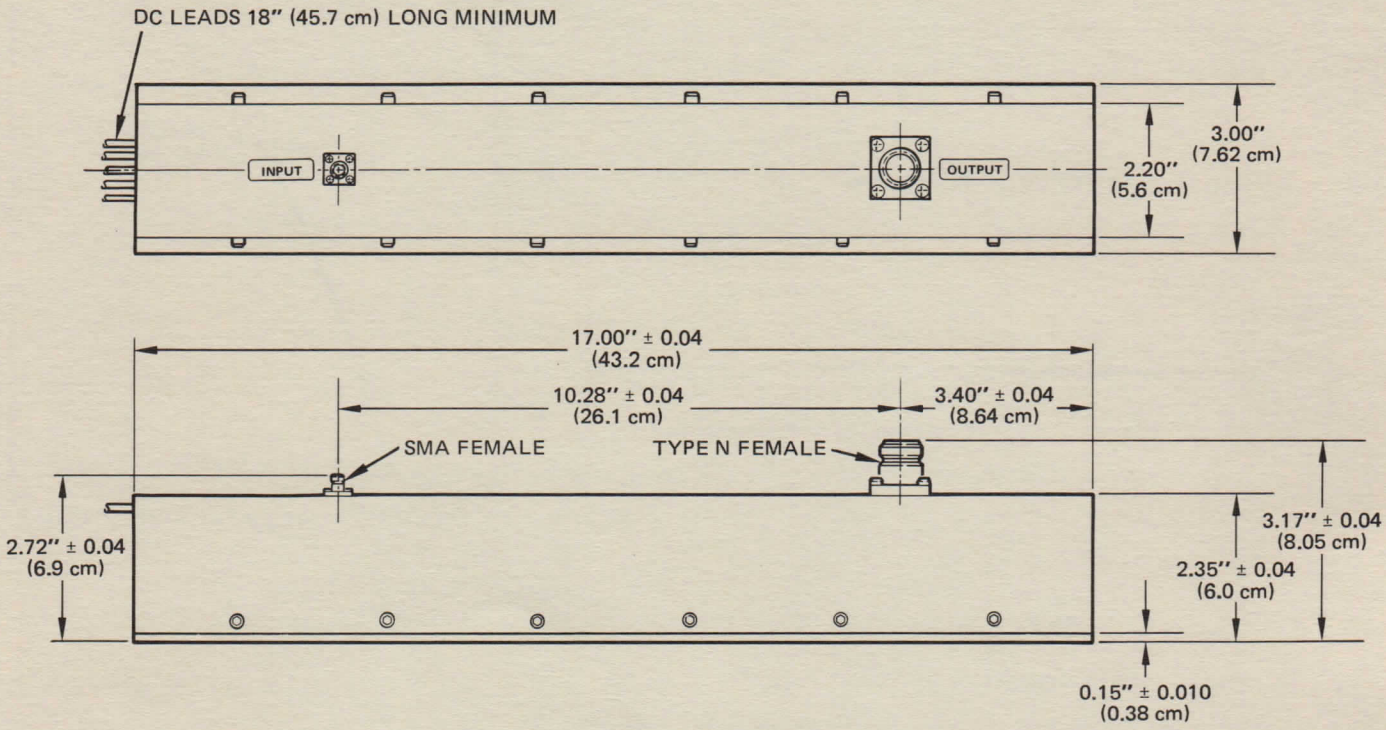

Your Local Representative:

HUGHES ELECTRON DYNAMICS DIVISION 3100 West Lomita Boulevard, P. O. Box 2999, Torrance, California 90509, Tel (213) 517-6000

HUGHES AIRCRAFT COMPANY

Printed in U.S.A. 8/81 AL

HUGHES

HUGHES AIRCRAFT COMPANY

ELECTRON DYNAMICS DIVISION

881H

250 W 14.0-14.5 GHz CW TWT

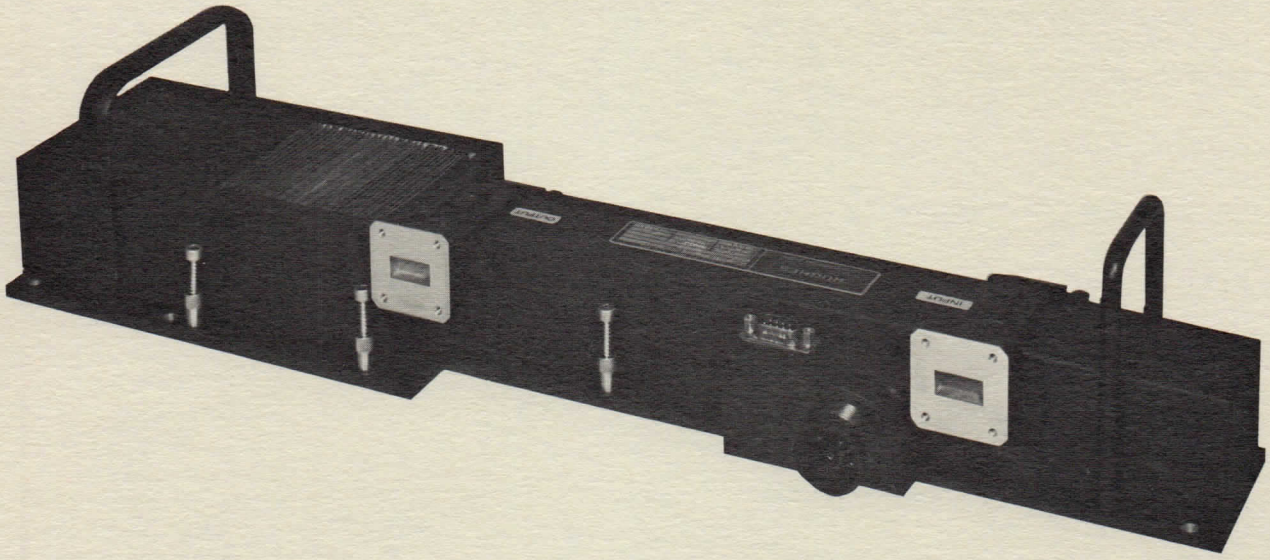

DESCRIPTION

The Hughes Model 881H traveling-wave tube is designed for use in satellite earth terminal transmitters. The 881H TWT is capable of more than 250 watts of CW RF output power over the frequency range of 14.0 to 14.5 GHz. Design and construction of this tube is based on Hughes' experience in the production of high power CW tubes (output powers greater than 1000 watts) and space qualified communications tubes that have won worldwide recognition for quality and reliability. The 881H TWT is constructed of metal-ceramic with PPM focusing and forced-air cooling. A modulating anode is utilized for fast turn-on and turn-off of beam current during normal operating sequencing and under fault conditions.

The 881H offers internal programming assuring a proper TWT/power supply interface and simplifying field maintenance. Anode, cathode and heater voltage can be automatically set when using a programmable power supply design. Long projected cathode life of 25,000 to 35,000 hours insures low life cycle costs. An ion pump is included to assure vacuum integrity during the long life of the tube. The collector is a single stage depressed type incorporating integral fins for flow-through forced-air cooling. Samarium cobalt magnets provide the focusing field. The helix is supported on beryllia rods that are coated at their center sections with pyrolytic carbon to provide exceptional gain stability. The tube body is conduction cooled through its base-plate support. An integral collector thermal switch is provided to allow tube turn-off under excessive temperature conditions.

Detailed communication performance characteristics and test data are available upon request.

SPECIFICATIONS*

RF

Frequency	14.0–14.5 GHz
Power Output	250 W minimum
Duty Cycle	CW
Bandwidth	500 MHz minimum
Gain at Rated Power Output	45 dB typical
Small Signal Gain	46 dB minimum
Small Signal Gain Variation	0.35 dB maximum/50 MHz
Small Signal Gain Slope	0.015 dB/MHz maximum
Power Stability	±0.25 dB/24 hrs
Noise Figure	37 dB maximum
AM/PM Conversion	5°/dB maximum
Phase Sensitivity (beam voltage)	1^{O}/V nominal
Input VSWR	2.0:1 maximum
Load VSWR	1.3:1 maximum for specification compliance 2.0:1 maximum without damage
Harmonic Output	–10 dBc maximum at rated output power
Efficiency	25% nominal
IM (3rd order two equal carriers, 25 W each)	–25 dB typical

ELECTRICAL

Heater Current	2.0 A maximum
Heater Voltage	6.3 V nominal
Cathode Voltage (Ek)	8.4 to 8.8 kVdc
Cathode Current (Ik)	300 mA maximum
Anode Voltage (Ea)	50–550 Vdc
Anode Current (Ia)	1.0 mA maximum
Body Current (Helix Current, Iw)	10 mA maximum
Collector Voltage (Eb)	53% ± 5% of cathode voltage (Ek)
Collector Current (Ib)	300 mA maximum
Ion Pump Voltage	3.4 kV
Ion Pump Current	3 μA at operating maximum, 0.5 μA surge

MECHANICAL

Size	see outline drawing
Weight	11 pounds (5.0 kg) nominal
Input Connector	WR-75 W/G flange
Output Connector	WR-75 W/G flange
Power Connector	AMP P/N 861647-7
Cooling	forced air (100 CFM)
Thermal Switch Connector	DEMA-9P

ENVIRONMENTAL

Operating	
Temperature Range	0–50°C
Altitude	up to 10,000 feet (3.05 km)
Non-Operating	
Temperature	–50°C to +85°C
Altitude	up to 50,000 feet (15.25 km)

*Subject to change without notice.

TYPICAL PERFORMANCE CURVES

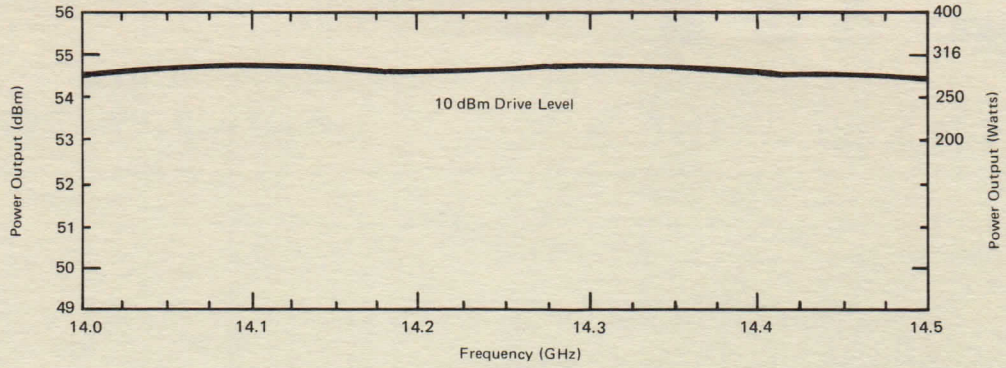

SMALL SIGNAL GAIN VERSUS FREQUENCY

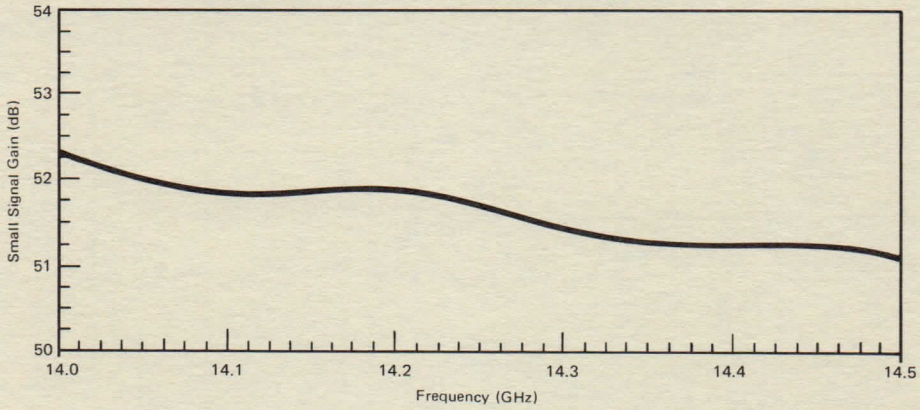

TYPICAL PHASE VARIATION WITH RF INPUT DRIVE

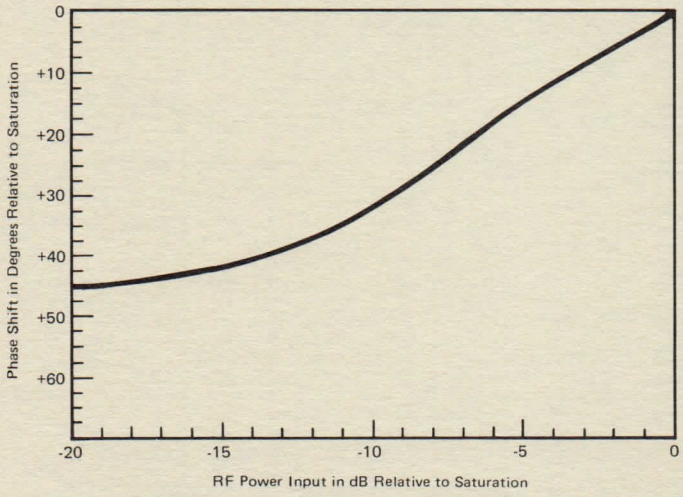

TYPICAL INTERMODULATION DISTORTION

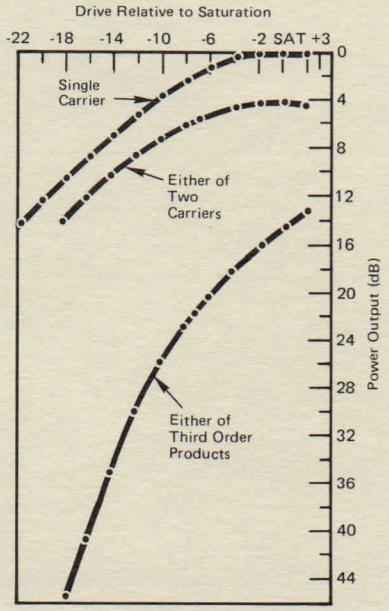

881H

250 W 14.0-14.5 GHz CW TWT

HUGHES

HUGHES AIRCRAFT COMPANY

ELECTRON DYNAMICS DIVISION

OUTLINE DRAWING

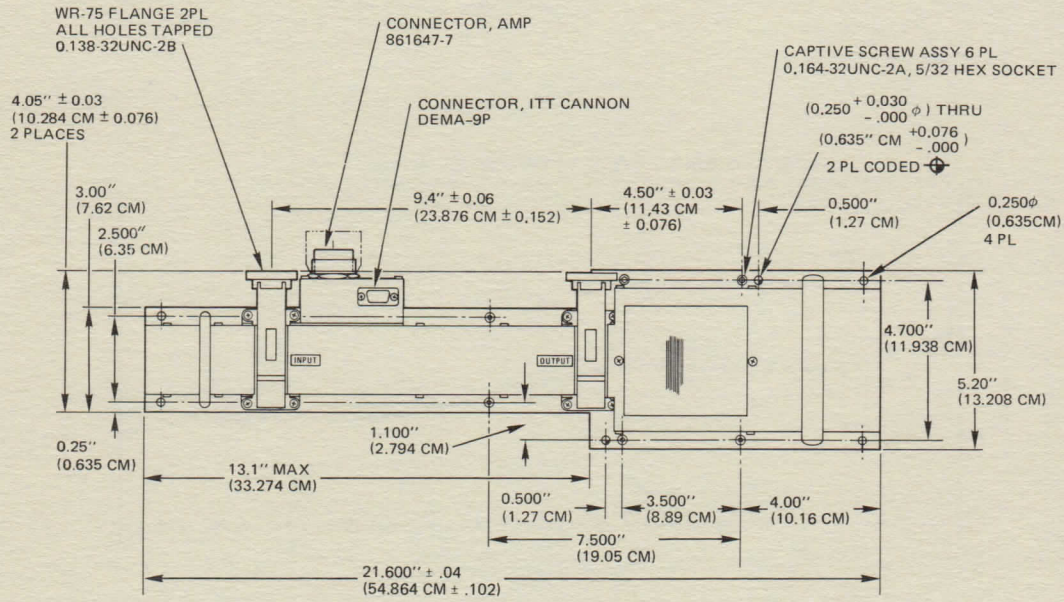

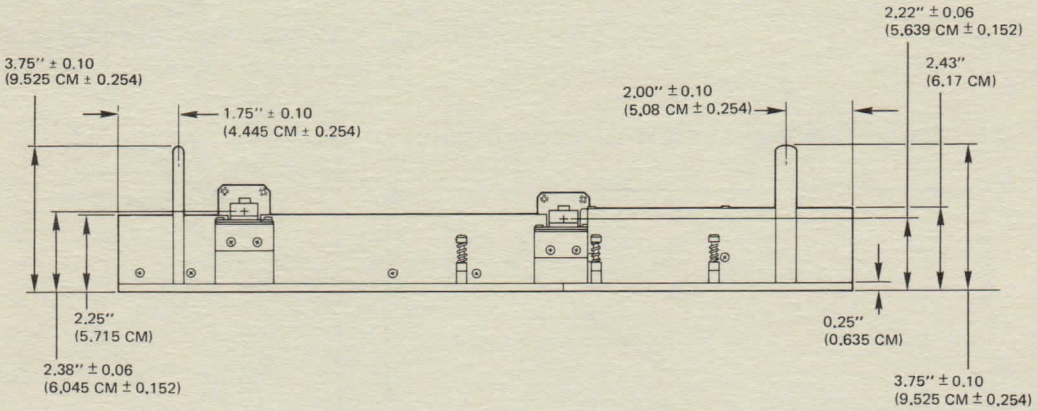

Your Local Representative:

HUGHES
HUGHES AIRCRAFT COMPANY
ELECTRON DYNAMICS DIVISION 3100 West Lomita Boulevard, P. O. Box 2999, Torrance, Ca 90509, Tel (213) 534-2121

PRINTED IN U.S.A. 1/80 AL

HUGHES

HUGHES AIRCRAFT COMPANY

ELECTRON DYNAMICS DIVISION

9020H04 COMMUNICATIONS POWER AMPLIFIER

20 Watts 14.0 - 14.5 GHz

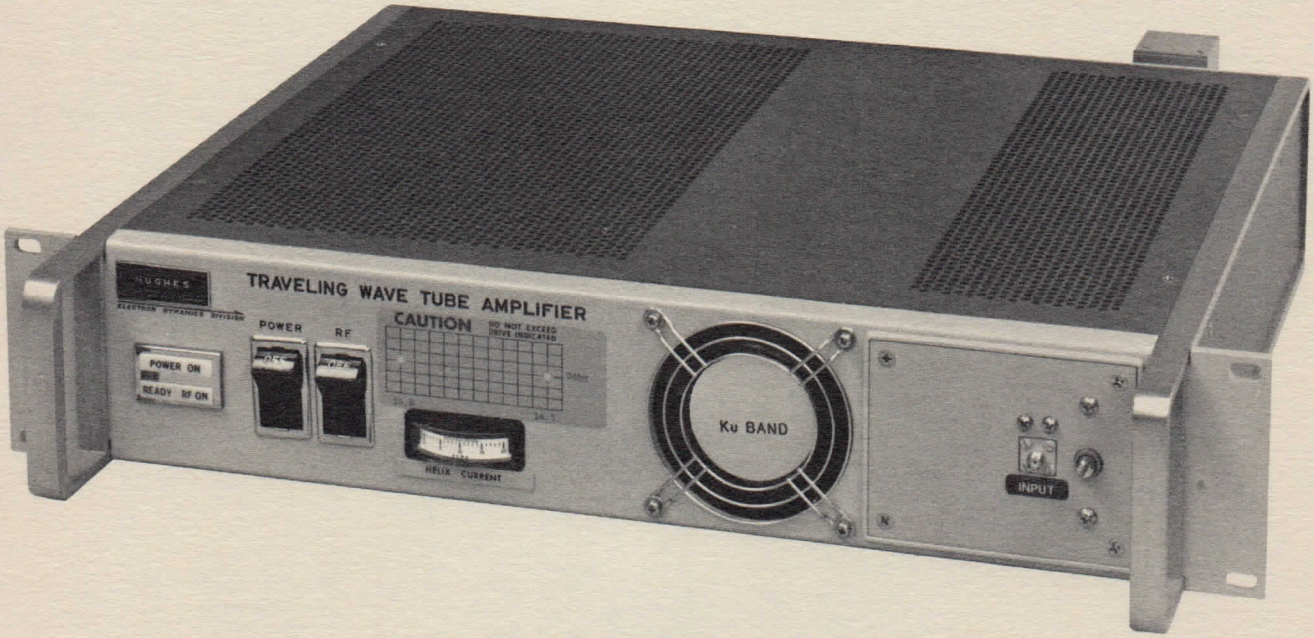

MODEL 9020H04R, 14.0 – 14.5 GHz, 20 Watts

FEATURES

- Designed for Continuous Unattended Operation
- High Reliability
- Lightweight-Compact
- Protective Features
- Low Power Consumption
- Specifically Configured for Satellite Earth Terminals
- AC or DC Input Power
- Rugged Metal-Ceramic Traveling-Wave Tube
- Integral Cooling System
- Coaxial or Waveguide Inputs/Outputs
- Full One Year Warranty – No Hour Limit

DESCRIPTION

Hughes Communications Amplifiers are specifically configured for use as output amplifiers in small capacity satellite earth terminals. The 9020H04R provides either 20 watts from the tube output or 15 watts minimum at the HPA output after an isolator and filter in the 14 GHz satellite up-link band. These compact traveling-wave tube amplifiers are available in a basic configuration including a power supply, TWT and control/protection circuitry, or as a complete power amplifier by including the optional features described at the end of this section.

This power amplifier is one of a series that uses rugged metal ceramic traveling-wave tubes which have been derived from the Hughes space qualified devices. Over 6,000 of the 9000H series power amplifiers are currently in service around the world. More than 150 of one such amplifier are presently in service in the Alaska Bush Terminal Program, where they have a field proven MTBF of greater than 60,000 hours. Similar reliability and performance have been achieved in other programs, including Indonesia's Perumtel. The knowledge gained in these programs allows us to warrant the complete power amplifier for a full year, regardless of the hours of use.

The power supply offers optimum interface with the traveling-wave tube for proven reliability and tube protection. Solid state circuitry is used throughout the power supply. Protective features include excess helix current overload, thermal overload, and automatic time delay for tube warm-up. Other available features associated with the power supply are high voltage interlocks; operation from 115 Vac, 230 Vac, 48 Vdc input power; remote controls/status indicators for remote operation; and redundant power amplifier operation.

Optional RF features include: solid state driver for increased gain; output isolator for TWT protection; output power monitor; input isolator; and input adjustable attenuator. For redundant operation, this unit is designed to interface with the Hughes 9100H series Redundant Control unit.

TYPICAL BLOCK DIAGRAMS

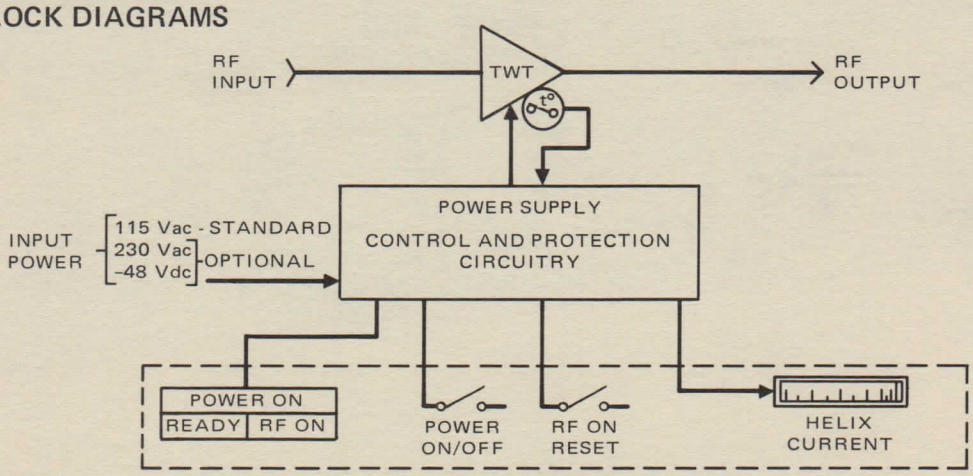

BASIC AMPLIFIER CONFIGURATION

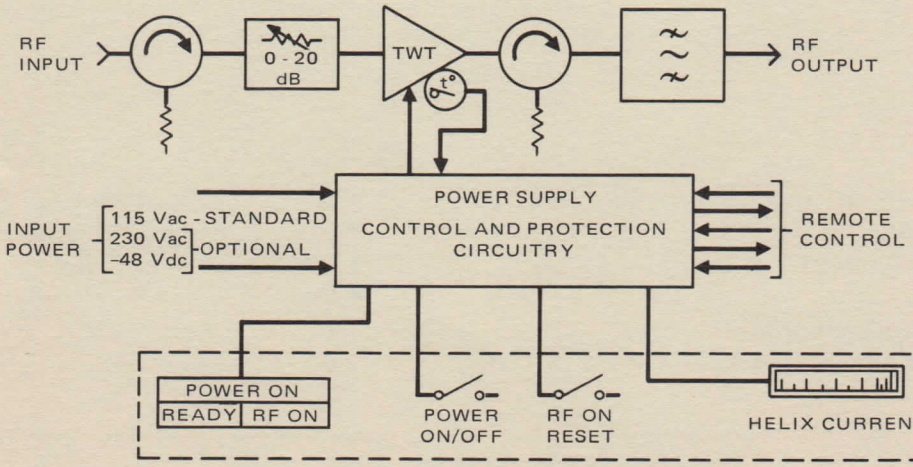

POWER AMPLIFIER CONFIGURATION

SPECIFICATIONS*

RF Performance (typical)

Frequency	14.0 to 14.5 GHz
Bandwidth	500 MHz minimum
Power Output (CW)	
At TWT	21 W minimum
At Amplifier Output	15 W minimum
Gain (with solid state driver)	
At Rated Power	70 dB typical
Small Signal	75 dB typical
Stability	±0.25 dB/24 hours
Control (continuous)	0 to -20 dB
Settability	±0.2 dB
Variation(over 500 MHz band)	±1.0 dB maximum**
Slope (over 40 MHz band)	0.05 dB/MHz maximum**
Gain (tube only, basic unit)	
At Rated Power	50 dB minimum, 53 dB typical
Small Signal	56 dB minimum, 59 dB typical
Group Delay (any 40 MHz band)	
Parabolic	0.05 ns/MHz^2 maximum
Linear	0.1 ns/MHz maximum
Ripple	1.0 ns peak-to-peak maximum
VSWR	
Input	1.5:1 maximum
Output (non-operating)	1.5:1 maximum
Load (normal operation)	2.0:1 maximum
AM/PM Conversion (@ rated power)	5°/dB maximum
Noise and Spurious	
11.0 – 12.7 GHz band	-110 dBW/4 kHz maximum****
12.4 – 18.0 GHz band	-55 dBW/4 kHz maximum
18.0 – 40.0 GHz band	-110 dBW/MHz maximum
Noise Figure	
With Solid State Driver	18 dB maximum
Without Solid State Driver	37 dB maximum
Residual AM (referred to single carrier at rated output power)	
Below 10 kHz	-40 dB maximum
10 kHz to 500 kHz	-20 (1 + $\log_{10}$f) dB maximum
Above 500 kHz	-80 dB maximum
Residual FM	-50 dBc maximum
2nd Harmonic Output (at rated output power)	without filter -6 dBc maximum
	with filter -35 dBc maximum
IM (3rd Order two equal carriers, 1.5 W total output)	-28 dB maximum

Electrical

Input Voltage	optional
Input Power	400 watts maximum

Mechanical

Cooling (integral blowers)	forced air
Weight	30 pounds (13.6 kg) maximum
Dimensions	19 inches wide X 3.5 inches high X 19 inches deep (48.3 cm X 8.9 cm X 48.3 cm)
Mounting	front rack
Connectors	
RF Input	type SMA female
RF Output	UG 419/U (WR62)

Environmental

Temperature (operating)	0 to +50°C
Relative Humidity (without condensation)	95% maximum
Altitude	10,000 feet maximum***
Shock and Vibration	as normally encountered in commercial shipping and handling

*Specifications subject to change without prior noitce.

**Measured with 0 dB input attenuation.

***40°C maximum operating temperature above 6,000 feet.

****With optional high pass filter mounted externally at output.

9020H04
COMMUNICATIONS POWER AMPLIFIER
20 Watts 14.0 - 14.5 GHz

HUGHES

HUGHES AIRCRAFT COMPANY

ELECTRON DYNAMICS DIVISION

TYPICAL OUTLINE AND MOUNTING DRAWING

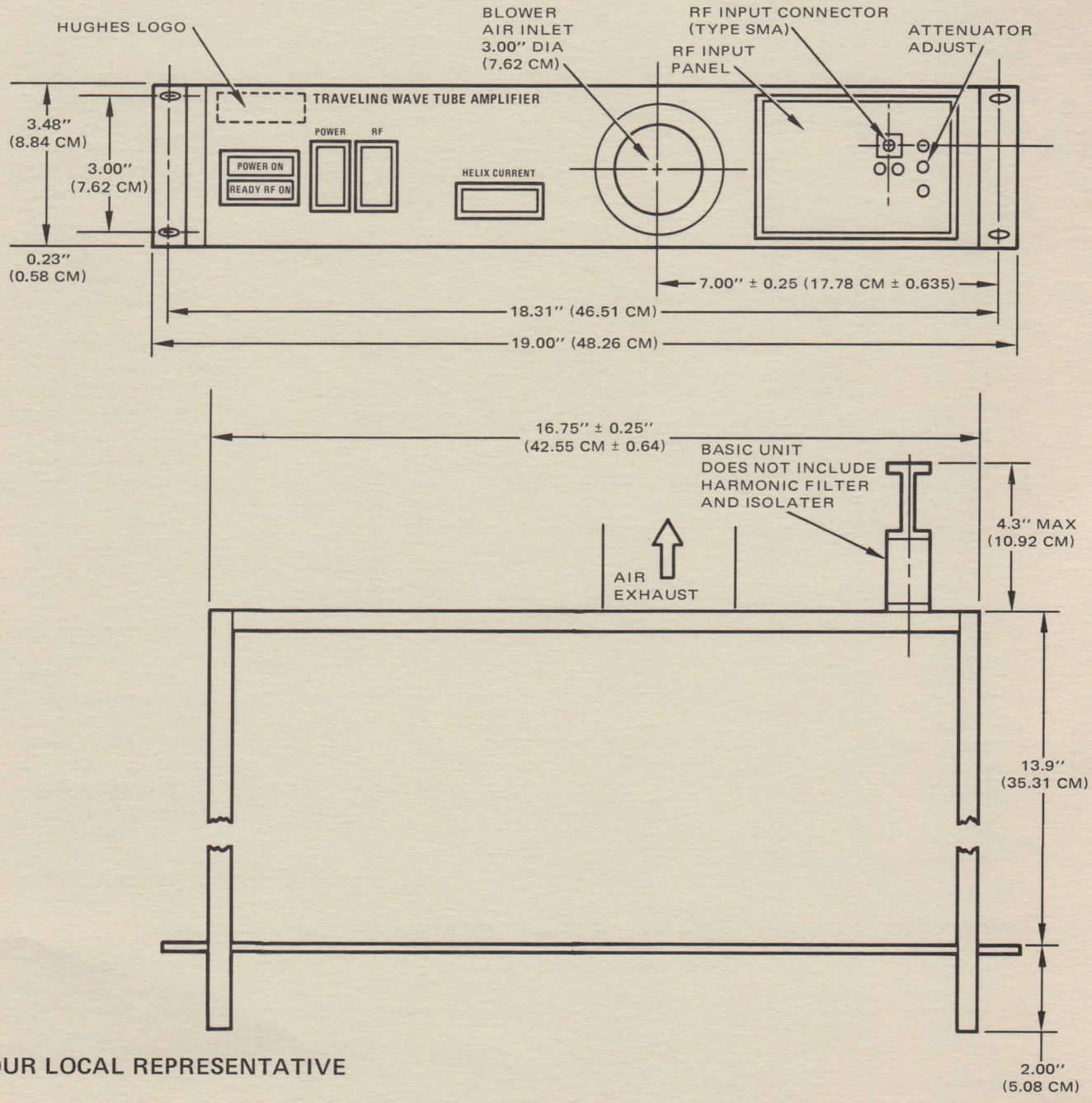

YOUR LOCAL REPRESENTATIVE

HUGHES
HUGHES AIRCRAFT COMPANY
ELECTRON DYNAMICS DIVISION 3100 West Lomita Boulevard, P. O. Box 2999, Torrance, California 90509, Tel (213) 517-6000

Printed in U.S.A. 5/82 AL

HUGHES

HUGHES AIRCRAFT COMPANY

ELECTRON DYNAMICS DIVISION

9040H02 COMMUNICATIONS POWER AMPLIFIER

40 Watts 6 GHz

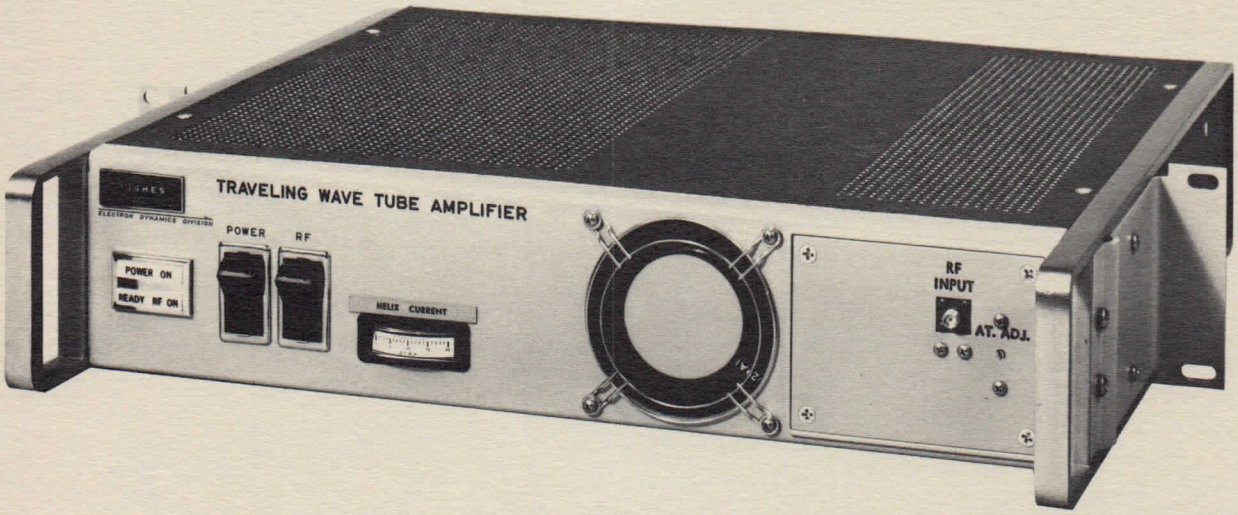

MODEL 9040H02R, 6 GHz, 40 Watts

FEATURES

- Designed for Continuous Unattended Operation
- High Reliability
- Lightweight-Compact
- Protective Features
- Low Power Consumption
- Specifically Configured for Satellite Earth Terminals
- AC or DC Input Power
- Rugged Metal-Ceramic Traveling-Wave Tube
- Integral Cooling System
- Coaxial or Waveguide Inputs/Outputs
- Full One Year Warranty — No Hour Limit

DESCRIPTION

Hughes Communications Amplifiers are specifically configured for use as intermediate power amplifiers in large satellite earth terminal transmitters and as output amplifiers in small capacity terminals. The 9040H02 provides 40 watts of RF output power in the 6 GHz satellite up-link band. These compact traveling-wave tube amplifiers are available in a basic configuration including a power supply, TWT and control/protection circuitry, or as a complete power amplifier by including optional features.

This power amplifier series utilizes any of several rugged metal-ceramic traveling-wave tubes derived from Hughes' space qualified devices. Over 6000 of the 9000H series power amplifiers are currently in service around the world. More than 150 of the Model 9040H02 amplifier are presently in service in the Alaska Bush Terminal Program. These HPA's have a field proven MTBF of greater than 90,000 hours based on a 90% confidence factor in this program. Similar reliability and performance has been achieved in other programs, including Indonesia's Perumtel. The knowledge gained in these programs allows us to warrant the complete power amplifier for a full year, regardless of the hours of use.

The power supply offers optimum interface with the traveling-wave tube for proven reliability and tube protection. Solid state circuitry is used throughout the power supply. Protective features include excess helix current overload, thermal overload and automatic time delay for tube warm-up. Other available features associated with the power supply are operation from 115 Vac, 230 Vac, 48 Vdc and 28 Vdc input power; and redundant power amplifier operation.

RF features include: output isolator for TWT protection; output power monitor; input isolator; and input adjustable attenuator. RF and control interfaces are available for use with the Hughes 9100H series of Redundant Control units. Optional solid state driver is available for increased gain.

TYPICAL BLOCK DIAGRAM

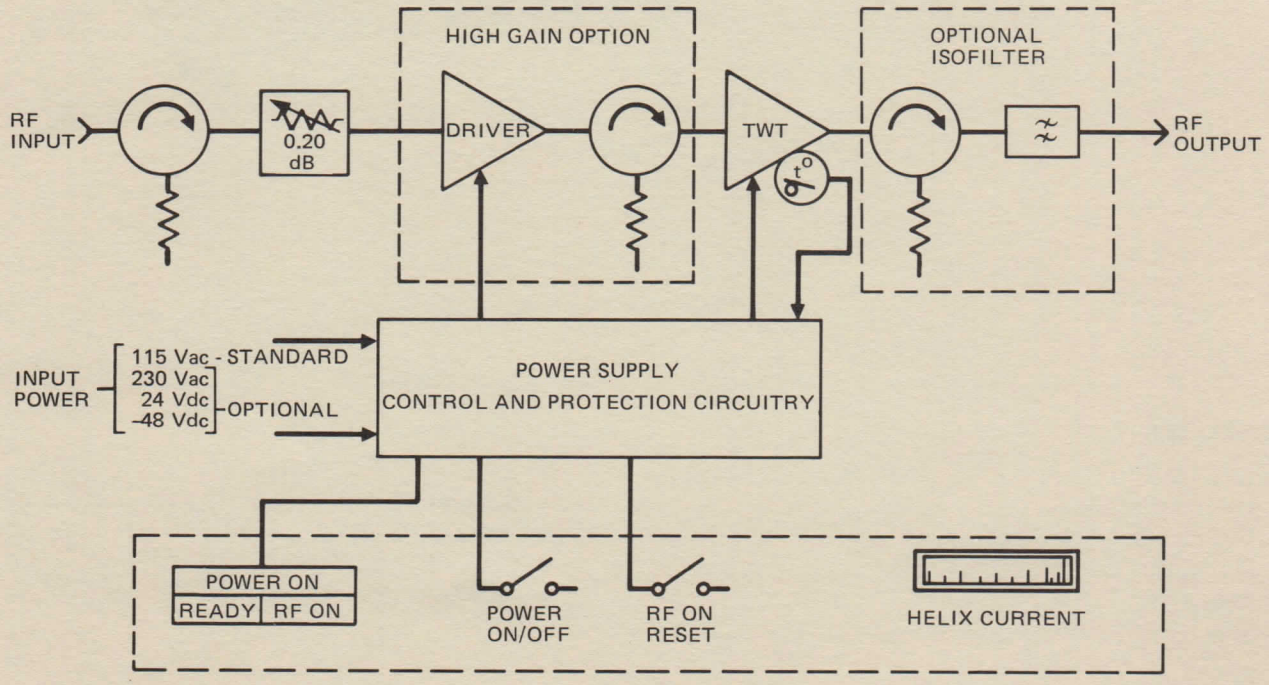

POWER AMPLIFIER CONFIGURATION

SPECIFICATIONS*

RF Performance (typical)

Frequency	5.925 to 6.425 GHz
Bandwidth	.500 MHz minimum
Power Output (CW)	40 W minimum
	42 W typical
Gain (with solid state driver)	
At Rated Power	.70 dB typical
Small Signal	.75 dB typical
Stability	±0.25 dB/24 hours
Control (continuous)	.0 to -20 dB
Settability	±0.2 dB
Variation (over 500 MHz band)	±1.0 dB maximum**
Slope (over 40 MHz band)	0.05 dB/MHz maximum**
Gain (without solid state driver)	
At Rated Power	.42 dB minimum, 45 dB typical
Small Signal	.47 dB minimum, 50 dB typical
Group Delay (any 40 MHz band)	
Parabolic	.0.05 ns/MHz^2 maximum
Linear	.0.1 ns/MHz maximum
Ripple	1.0 ns peak-to-peak maximum
VSWR	
Input	.1.5:1 maximum
Output (non-operating)	.1.5:1 maximum
Load (normal operation)	.2.0:1 maximum
AM/PM Conversion (@ rated power)	5°/dB maximum
Noise and Spurious	
3.7 to 4.2 GHz band	-130 dBW/4 kHz maximum****
4.2 to 12.0 GHz band	-65 dBW/4 kHz maximum
12.0 to 40.0 GHz band	-110 dBW/MHz maximum
Noise Figure	
With Solid State Driver	15 dB maximum
Without Solid State Driver	37 dB maximum
Residual AM (referred to single carrier at rated output power)	
Below 10 kHz	-40 dB maximum
10 kHz to 500 kHz	-20 (1 + $\log_{10}$f) dB maximum
Above 500 kHz	-80 dB maximum
Residual FM	-50 dBc maximum
2nd Harmonic Output (at rated output power)	without isol filter. -8 dBc maximum
	with isol filter -40 dBc maximum
IM (3rd Order two equal carriers, 1.5 W each)	-28 dB maximum

Electrical

Input Voltage	optional
Input Power	400 watts maximum

Mechanical

Cooling (integral blowers)	forced air
Weight	30 pounds (13.6 kg) maximum
Dimensions	19 inches wide X 3.5 inches high X 19 inches deep (48.3 cm X 8.9 cm X 48.3 cm)
Mounting	front rack
Connectors	
RF Input	type SMA female
RF Output	CPR-137 W/G (with isol filter)
Sample Port (optional)	SMA female

Environmental

Temperature (operating)	0 to +50°C
Relative Humidity (without condensation)	95% maximum
Altitude	10,000 feet maximum***
Shock and Vibration	as normally encountered in commercial shipping and handling

*Specifications subject to change without prior notice.

**Measured with 0 dB input attenuation.

***40°C maximum operating temperature above 6,000 feet.

****Attenuation is controlled by external W/G connected to the unit. 10 feet minimum is recommended.

9040H02
COMMUNICATIONS POWER AMPLIFIER
40 Watts 6 GHz

HUGHES
HUGHES AIRCRAFT COMPANY
ELECTRON DYNAMICS DIVISION

TYPICAL OUTLINE AND MOUNTING DRAWING

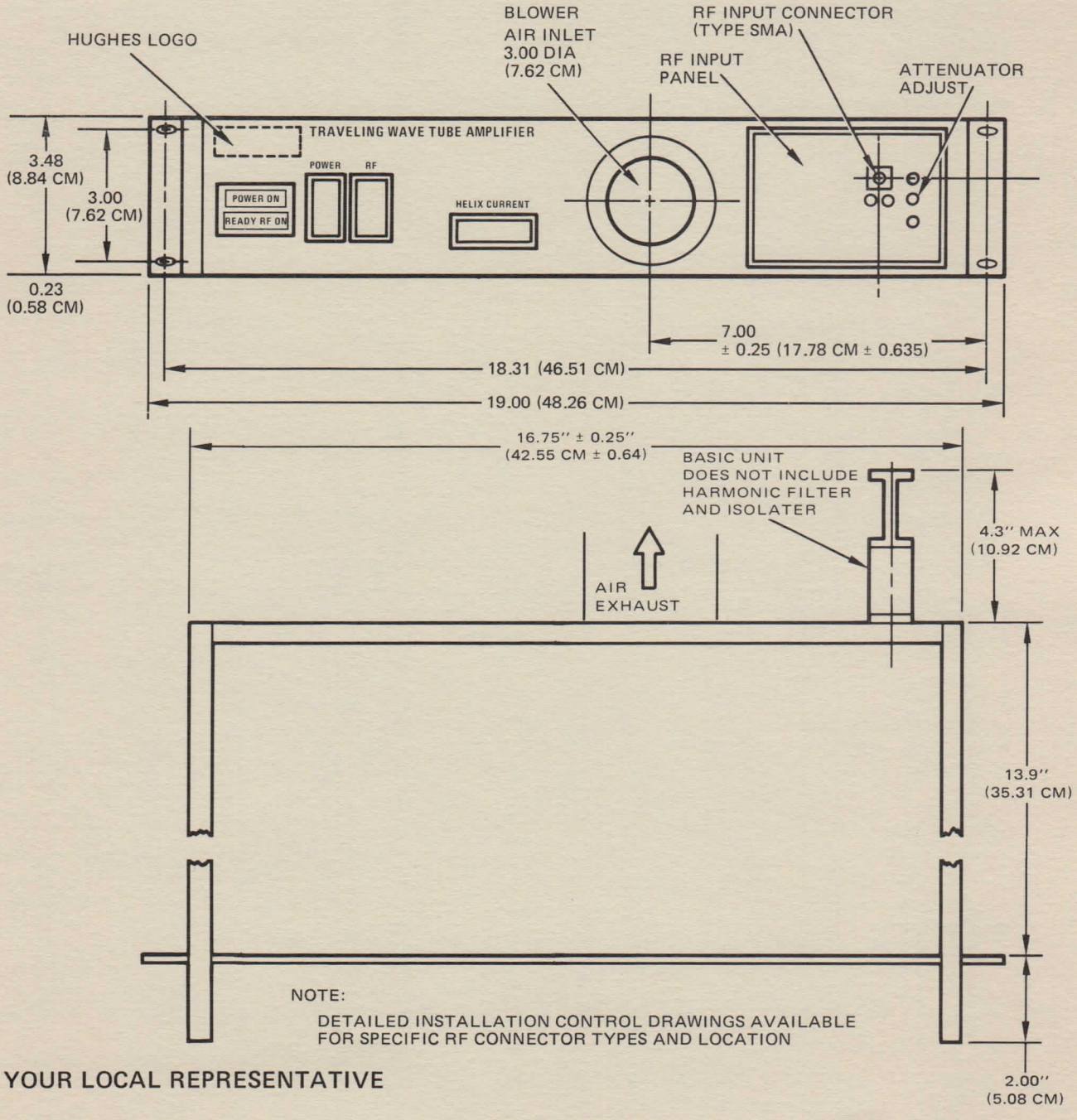

NOTE:
DETAILED INSTALLATION CONTROL DRAWINGS AVAILABLE FOR SPECIFIC RF CONNECTOR TYPES AND LOCATION

YOUR LOCAL REPRESENTATIVE

All specifications are subject to change without prior notice.

HUGHES *ELECTRON DYNAMICS DIVISION* 3100 West Lomita Boulevard, P.O. Box 2999, Torrance, California 90509, Tel (213) 517-6000
HUGHES AIRCRAFT COMPANY

Printed in U.S.A. 5/82 AL

HUGHES

HUGHES AIRCRAFT COMPANY

ELECTRON DYNAMICS DIVISION

9040H03 COMMUNICATIONS POWER AMPLIFIER

40 Watts 8 GHz

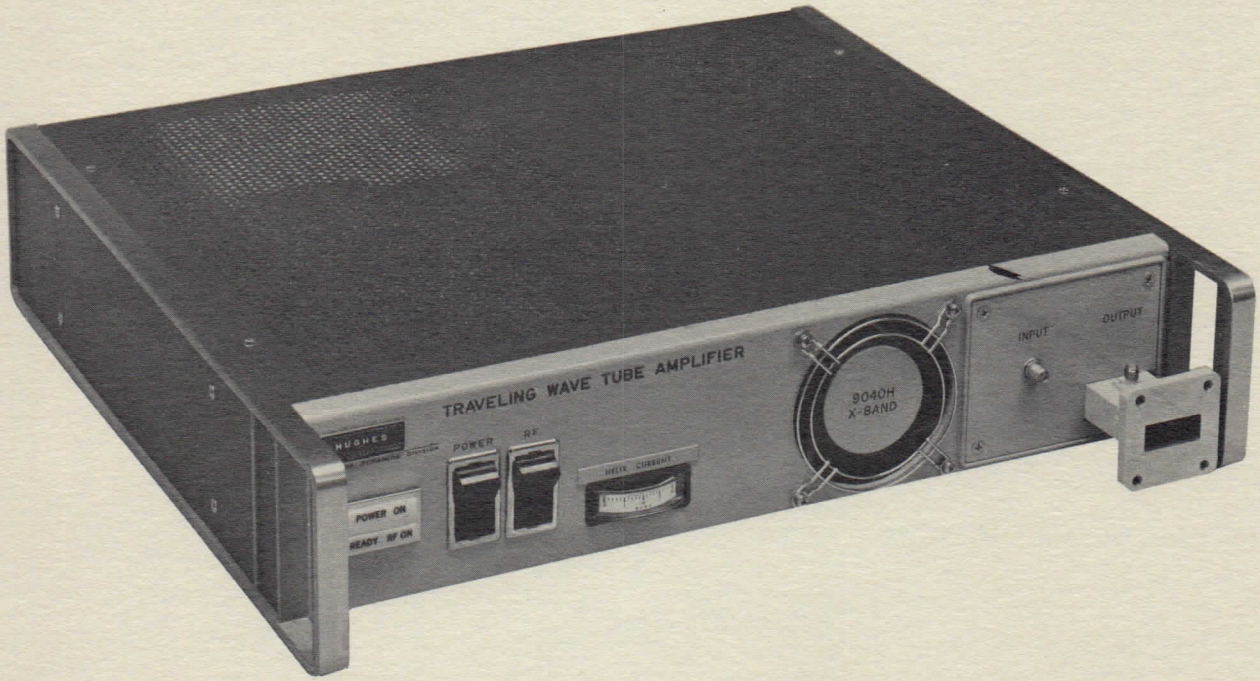

MODEL 9040H03R, 8 GHz, 40 Watts

FEATURES

- Designed for Continuous Unattended Operation
- High Reliability
- Lightweight-Compact
- Protective Features
- Low Power Consumption
- Specifically Configured for Satellite Earth Terminals
- AC or DC Input Power
- Rugged Metal-Ceramic Traveling-Wave Tube
- Integral Cooling System
- Coaxial or Waveguide Inputs/Outputs
- Full One Year Warranty – No Hour Limit

DESCRIPTION

Hughes Communications Amplifiers are specifically configured for use as intermediate power amplifiers in large satellite earth terminal transmitters and as output amplifiers in small capacity terminals. The 9040H03 provides 40 watts of RF output power in the 8 GHz satellite up-link band. These compact traveling-wave tube amplifiers are available in a basic configuration including a power supply, TWT and control/protection circuitry, or as a complete power amplifier by including optional features.

This power amplifier series utilizes any of several rugged metal-ceramic traveling-wave tubes derived from Hughes' space qualified devices. Over 6000 of the 9000H series power amplifiers are currently in service around the world. More than 150 of the 6 GHz version of this amplifier are presently in service in the Alaska Bush Terminal Program. These HPA's have a field proven MTBF of greater than 90,000 hours based on a 90% confidence factor in this program. Similar reliability and performance has been achieved in other programs, including Indonesia's Perumtel. The knowledge gained in these programs allows us to warrant the complete power amplifier for a full year, regardless of the hours of use.

The power supply offers optimum interface with the traveling-wave tube for proven reliability and tube protection. Solid state circuitry is used throughout the power supply. Protective features include excess helix current overload, thermal overload and automatic time delay for tube warm-up. Other available features associated with the power supply are operation from 115 Vac, 230 Vac, and 48 Vdc input power; and redundant power amplifier operation.

RF features include: output isolator for TWT protection; input isolator; and input adjustable attenuator. RF and control interfaces are available for use with the Hughes 9100H series of Redundant Control units. Optional solid state driver is available for increased gain.

TYPICAL BLOCK DIAGRAM

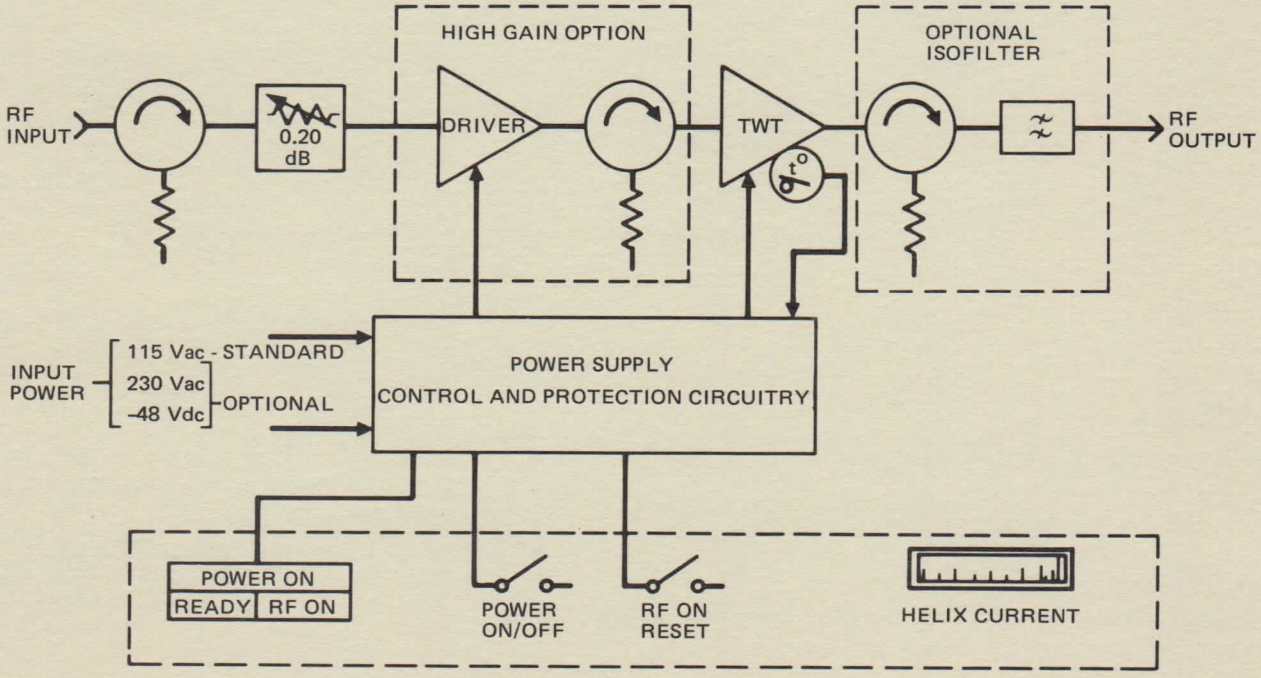

POWER AMPLIFIER CONFIGURATION

SPECIFICATIONS*

RF Performance (typical)

Frequency	7.9 to 8.4 GHz
Bandwidth	500 MHz minimum
Power Output (CW)	40 W minimum
	42 W typical
Gain (with optional solid state driver)	
At Rated Power	65 dB typical
Small Signal	70 dB typical
Stability	±0.25 dB/24 hours
Control (continuous)	0 to -20 dB
Settability	±0.2 dB
Variation (over 500 MHz band)	±1.5 dB maximum**
Slope (over 40 MHz band)	0.05 dB/MHz maximum**
Gain (standard)	
At Rated Power	42 dB minimum, 45 dB typical
Small Signal	47 dB minimum, 50 dB typical
Group Delay (any 40 MHz band)	
Parabolic	0.05 ns/MHz^2 maximum
Linear	0.1 ns/MHz maximum
Ripple	1.0 ns peak-to-peak maximum
VSWR	
Input	1.5:1 maximum
Output (non-operating)	1.5:1 maximum
Load (normal operation)	2.0:1 maximum
AM/PM Conversion (@ rated power)	5°/dB maximum
Noise and Spurious	
7.25–7.75 GHz band	-130 dBW/4 kHz maximum****
4.2 to 12.0 GHz band	-65 dBW/4 kHz maximum
12.0 to 40.0 GHz band	-110 dBW/MHz maximum
Noise Figure	
With Solid State Driver	15 dB maximum
Without Solid State Driver (standard configuration)	37 dB maximum
Residual AM (referred to single carrier at rated output power)	
Below 10 kHz	-40 dB maximum
10 kHz to 500 kHz	-20 (1 + $\log_{10}$f) dB maximum
Above 500 kHz	-80 dB maximum
Residual FM	-50 dBc maximum
2nd Harmonic Output (at rated output power)	without isol filter. -8 dBc maximum
	with isol filter. -40 dBc maximum
IM (3rd Order two equal carriers, 1.5 W each)	-28 dB maximum

Electrical

Input Voltage	optional
Input Power	400 watts maximum

Mechanical

Cooling (integral blowers)	forced air
Weight	37 pounds (16.8 kg) maximum
Dimensions	19 inches wide X 3.5 inches high X 19 inches deep (48.3 cm X 8.9 cm X 48.3 cm)
Mounting	front rack
Connectors	
RF Input	type SMA female
RF Output	UG51/U (with isol filter)

Environmental

Temperature (operating)	0 to +50°C
Relative Humidity (without condensation)	95% maximum
Altitude	10,000 feet maximum***
Shock and Vibration	as normally encountered in commercial shipping and handling

*Specifications subject to change without prior notice.

**Measured with input attenuator adjusted for minimum attenuation.

***40°C maximum operating temperature above 6,000 feet.

****Attenuation is controlled by external receive band reject filter.

9040H03 COMMUNICATIONS POWER AMPLIFIER

40 Watts 8 GHz

HUGHES

HUGHES AIRCRAFT COMPANY

ELECTRON DYNAMICS DIVISION

TYPICAL OUTLINE AND MOUNTING DRAWING

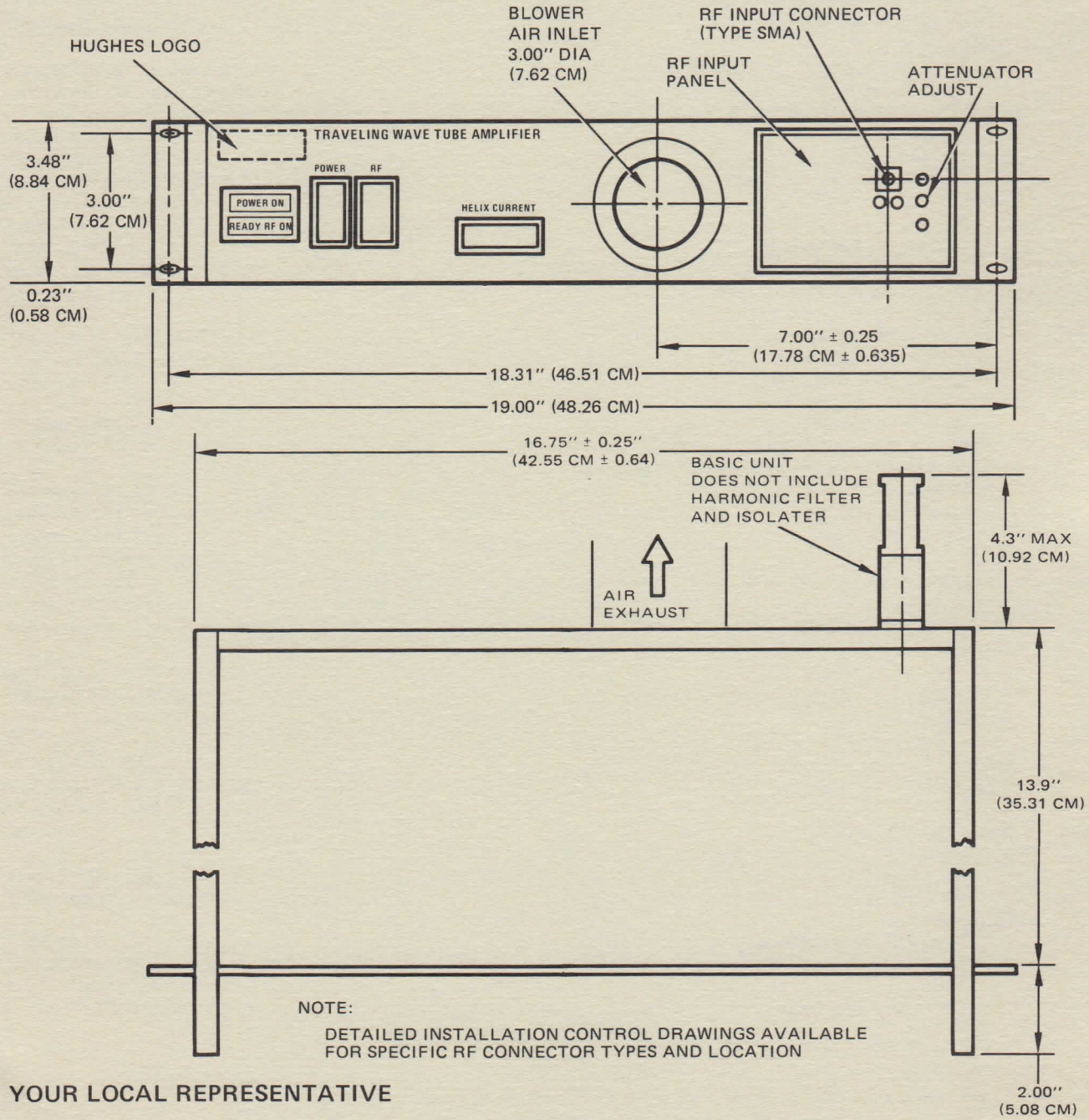

NOTE:

DETAILED INSTALLATION CONTROL DRAWINGS AVAILABLE FOR SPECIFIC RF CONNECTOR TYPES AND LOCATION

YOUR LOCAL REPRESENTATIVE

All specifications are subject to change without prior notice.

HUGHES ELECTRON DYNAMICS DIVISION 3100 West Lomita Boulevard, P.O. Box 2999, Torrance, California 90509, Tel (213) 517-6000

HUGHES AIRCRAFT COMPANY

Printed in U.S.A. 9/82 AL

HUGHES

HUGHES AIRCRAFT COMPANY

ELECTRON DYNAMICS DIVISION

9210H02 COMMUNICATIONS HPA SUBSYSTEM 6 GHz 125W

FEATURES

- High Reliability
- Automatic Recycle Provisions
- Protective Features
- Low Power Consumption (< 1 kVA)
- Fault Indicators
- Remote-Local Control
- Operational Status Indicators
- Rugged Metal-Ceramic Traveling-wave Tube
- Integral Cooling Systems
- Ease of Maintenance, Low MTTR
- Full One Year Warranty — No Hour Limit
- Replaceable Modular Design

DESCRIPTION

The Hughes Model 9210H02 Communications Power Amplifier is a single rack-mounted drawer containing the Hughes Model 677H TWT and integral Electronic Power Conditioner (EPC).
All logic and control, power conditioning, and microwave monitoring functions are performed within the drawer. This unit is designed to operate as the ground transmitter in a commercial satellite communication system. The design takes into account the requirements for installation in either manned or unmanned installations.

OPERATIONAL FEATURES

Time-totalizer (filament on time)

- Non-resettable

Controls

- Variable RF Input Attenuator (0 to -20 dB)

Operational Status Indicators (front panel)

- Power on (switch position)
- Stand by
- Operate
- Fault
- Local-Remote (switch position)

Remote Control Interface Connector (rear panel)

- All operational status indicators and control switches can be switched to a remote control interface connector to provide a ready means of remote control and status indication. Interface level is optional (RS422 or standard TTL).

Protection

- Prime Power (fuse)
- TWT Warm-up Time Delay
- Automatic Sequencing of High Voltage and Beam Current
- Helix Current Overload
- High Voltage Arc
- High Temperature (TWT and power supply)
- High or Low Line Voltage
- High Reflected Power
- System and Safety Interlocks
- Input Current Limit (150% of nominal)

Metering

- Output Power (optional)
- Helix Current

RF Signal Sample Output (-50 dBc)

Control Switches

- Power On-Off
- RF Off (fault reset)
- RF Stand by
- RF Operate
- Remote-Local

Fault Indicators

- Helix Current Overload
- Input Over Current
- High Temperature
- Reflected RF
- High or Low Line Voltage
- System Interlock Open

Automatic Recycle Provision

- Factory selectable 1 to 5 faults in one minute will reset

Options

- AC Input
- Output Metering
- Remote Interface Circuitry
- Remote Control
- Solid State Amplifier

SPECIFICATIONS*

RF Performance (typical)

Frequency	5.925 to 6.425 GHz
Bandwidth	.500 MHz minimum
Power Output (CW)	110 W minimum
Gain (with solid state driver)	
At Rated Power	60 dB minimum, 65 dB typical
Small Signal	65 dB minimum, 70 dB typical
Stability	±0.25 dB/24 hours
Control (continuous)	0 to -20 dB
Settability	±0.1 dB
Variation (over 500 MHz band)	2.0 dB maximum**1.0 dB typical
Slope (over 40 MHz band)	0.04 dB/MHz maximum**/36 MHz
Gain (without solid state driver)	
At Rated Power	40 dB minimum
Small Signal	47 dB minimum
Group Delay (any 40 MHz band)	
Linear	0.1 ns/MHz maximum
Parabolic	0.05 ns/MHz^2 maximum
Ripple	1.0 ns peak-to-peak maximum
VSWR	
Input	1.5:1 maximum****
Output (non-operating)	1.2:1 maximum
Load (normal operation)	2.0:1 maximum
AM/PM Conversion (@ rated power)	5°/dB maximum
Noise and Spurious	
3.7 to 4.2 GHz	-130 dBW/4 kHz maximum
5.925 to 6.425 GHz	-60 dBW/4 kHz maximum
4.2 to 40.0 GHz (except as noted)	-110 dBW/MHz maximum
Noise Figure	
With Solid State Driver	12 dB maximum
Without Solid State Driver	35 dB maximum
Residual AM (referred to single carrier at rated output power)	
Below 10 kHz	-40 dB maximum
10 kHz to 500 kHz	-20 (1 + $\log_{10}$ f) dB maximum
Above 500 kHz	-80 dB maximum
Residual FM	-60 dBc maximum
Harmonic Output (at rated output power)	-60 dBc maximum
IM (3rd Order two equal carriers, totaling) Rated Power	-10 dB maximum
-3	-17 dB maximum
-7	-25 dB maximum

Electrical

	DC	AC (optional)
Input Voltage	43–56 VDC	115/120/230/240 VAC
Input Power	800 W maximum	1000 W maximum
	700 W typical	850 W typical
Power Factor		0.75 minimum
Frequency		47-63 Hz

Mechanical

Cooling (integral blower)	forced air
Weight	50 pounds (22.7 kg) maximum
Dimensions	19 inches wide X 8 3/4 inches high X 24 inches deep (48.3 cm X 22.2 cm X 61.0 cm)
Mounting	rack with non-tilting chassis slides
Connectors	
RF Input	SMA female
RF Output	CPR 137F
RF Signal Sample	type N female

Environmental

Temperature (operating)	0 to +50°C
Relative Humidity (without condensation)	95% maximum
Altitude	14,000 feet maximum***
Shock and Vibration	as normally encountered in commercial shipping and handling

*Specifications subject to change without prior notice.

**Measured with 0 dB input attenuation.

***30° C maximum operating temperature above 10,000 ft.

****1.2:1 with optional input isolator.

BLOCK DIAGRAMS

RF BLOCK DIAGRAM

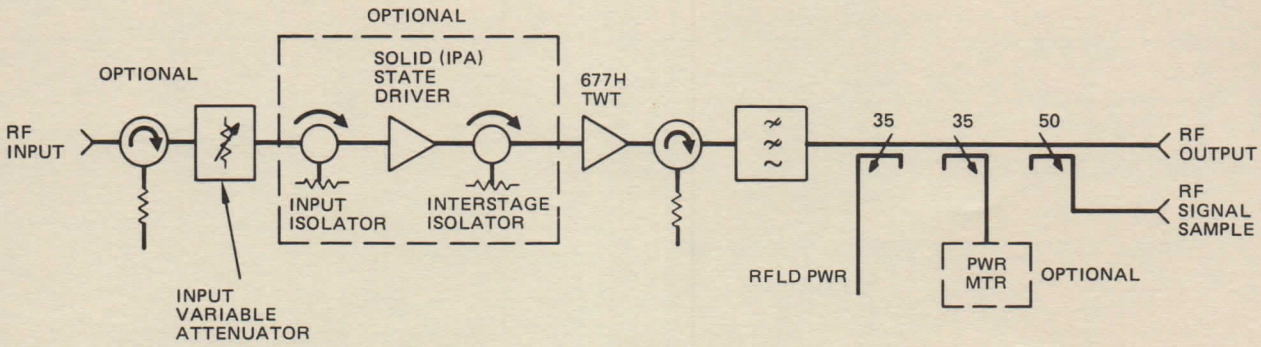

RF Components

- Input Isolator (optional)
- Input Variable Attenuator (0 to –20 dB)
- Solid State Driver Amplifier (includes interstage isolator)
- Output Isolator
- Output Harmonic Filter
- Reflected Power Protect Circuit
- Forward Power Monitor (optional)

125 W EPC BLOCK DIAGRAM

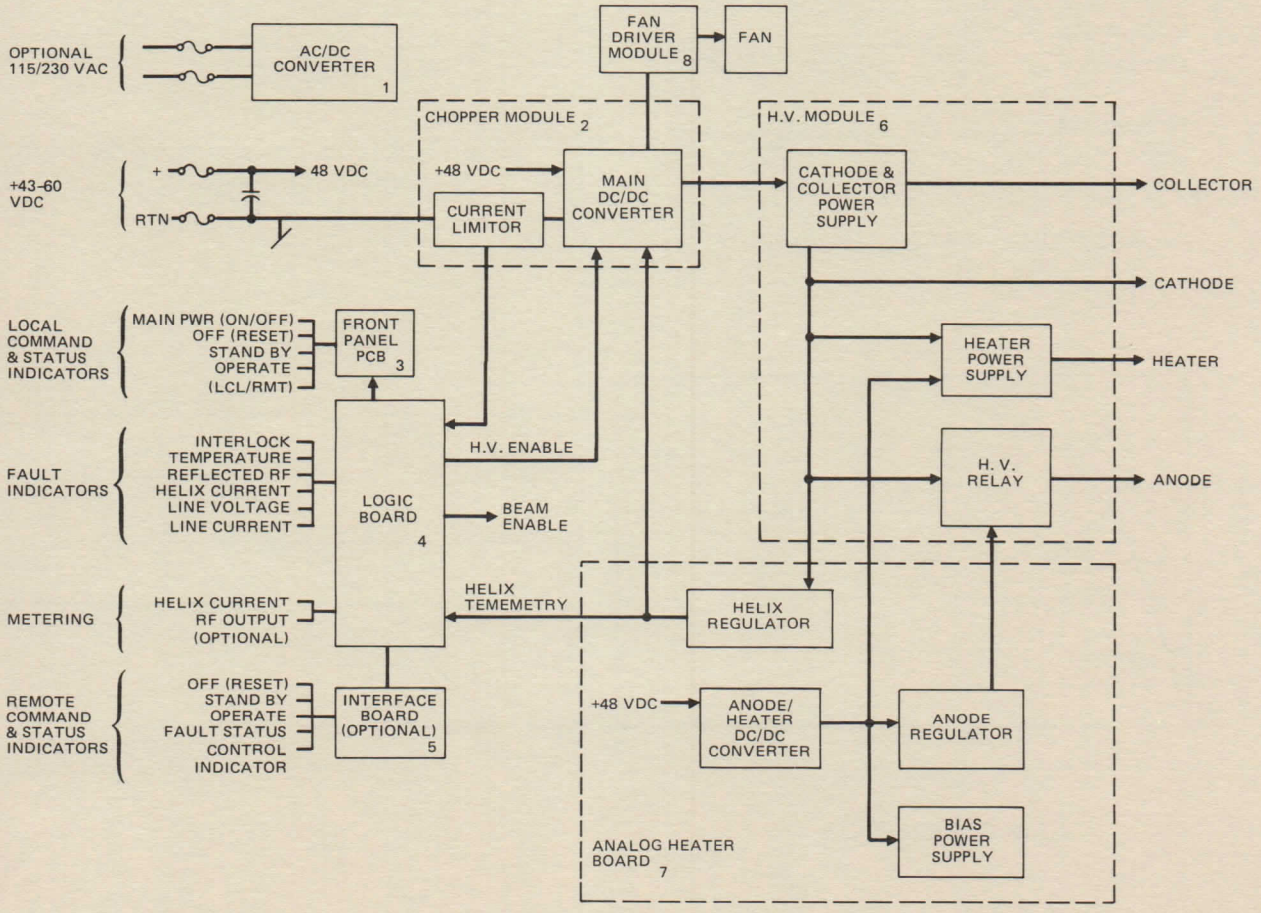

PERFORMANCE CURVES

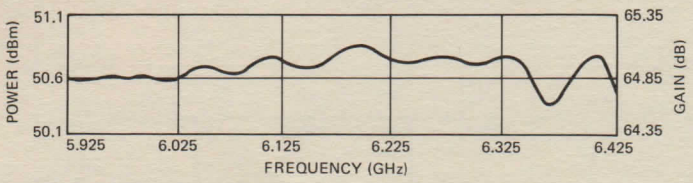

SATURATED OUTPUT VERSUS FREQUENCY

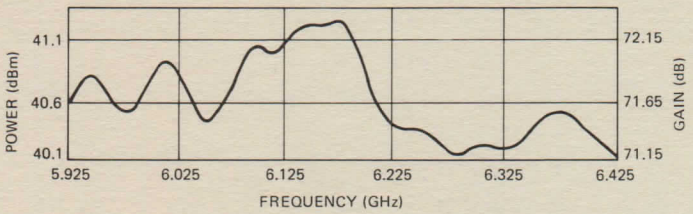

SMALL SIGNAL VARIATION VERSUS FREQUENCY

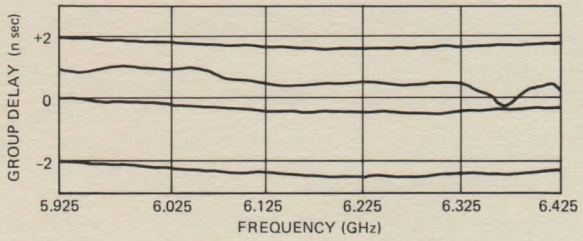

GROUP DELAY VERSUS FREQUENCY

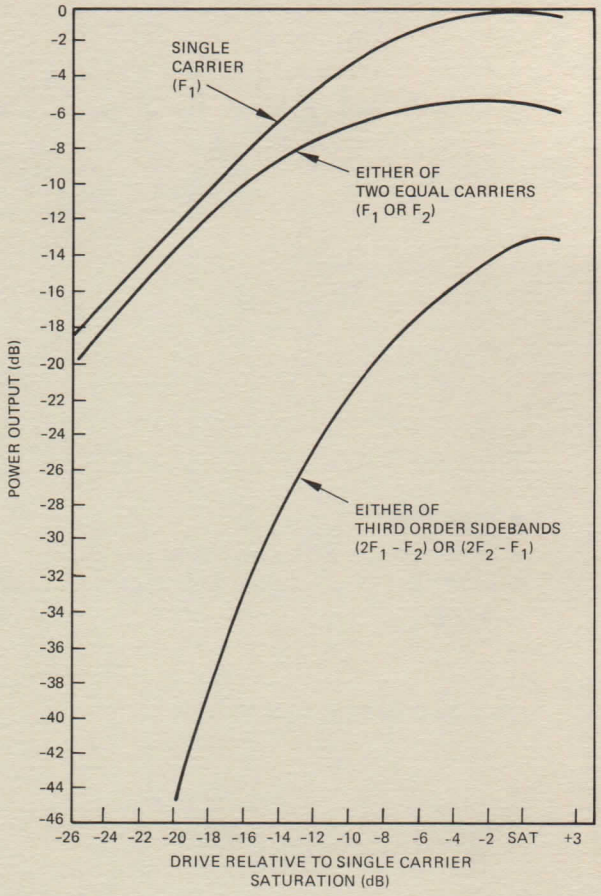

THIRD ORDER INTERMODULATION PRODUCTS RELATIVE TO DRIVE LEVEL

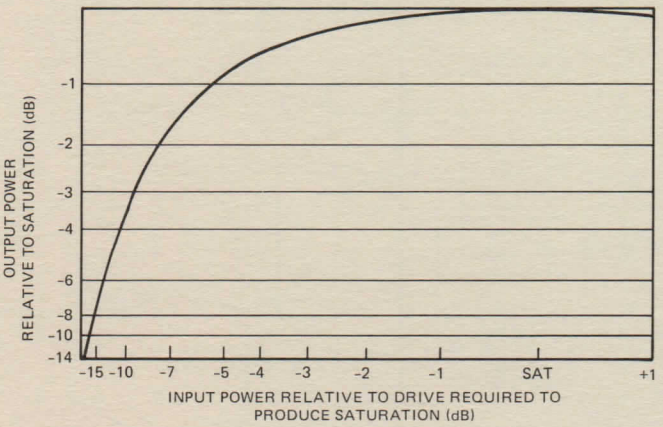

GAIN COMPRESSION

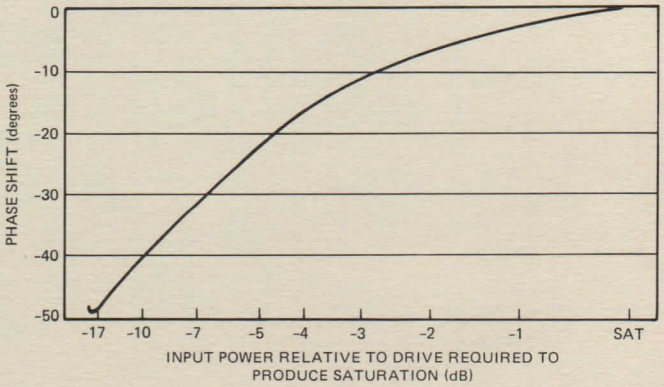

PHASE SHIFT

9210H02 COMMUNICATIONS HPA SUBSYSTEM 6 GHz 125W

HUGHES

HUGHES AIRCRAFT COMPANY

ELECTRON DYNAMICS DIVISION

OUTLINE DRAWINGS

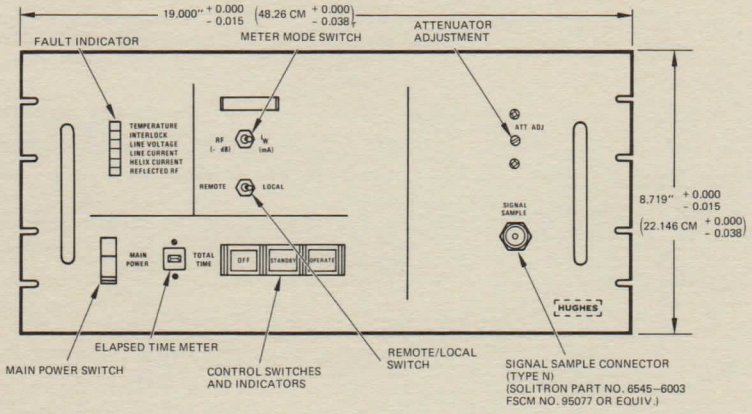

FRONT VIEW

SIDE VIEW

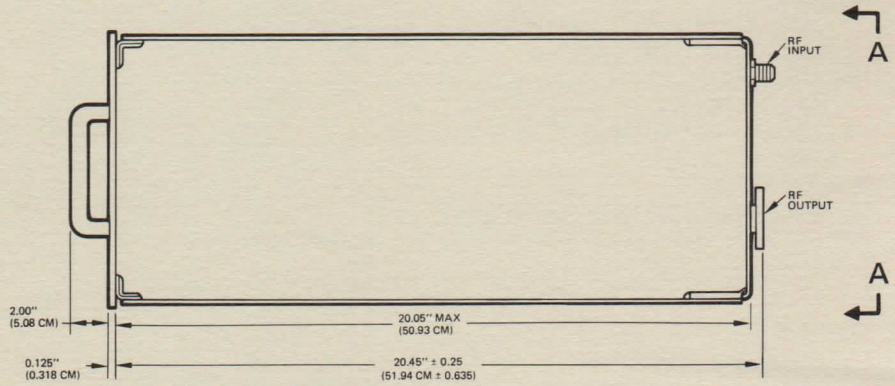

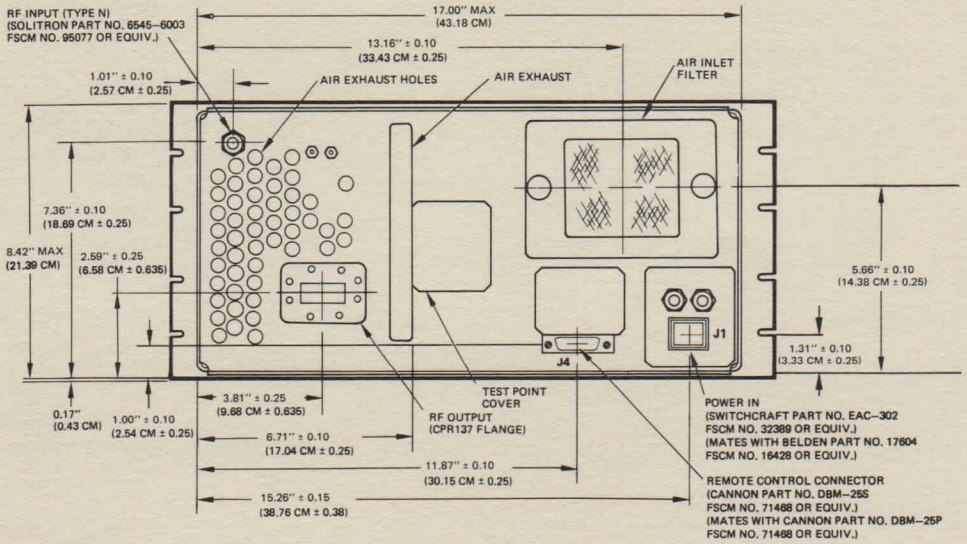

VIEW A–A

HUGHES ELECTRON DYNAMICS DIVISION 3100 West Lomita Boulevard, P.O. Box 2999, Torrance, California 90509, Tel (213) 517-6000

HUGHES AIRCRAFT COMPANY

PRINTED IN USA 5/82 AL

HUGHES

HUGHES AIRCRAFT COMPANY

ELECTRON DYNAMICS DIVISION

9225HA04 COMMUNICATIONS HPA SUBSYSTEM 14 GHz 250 W

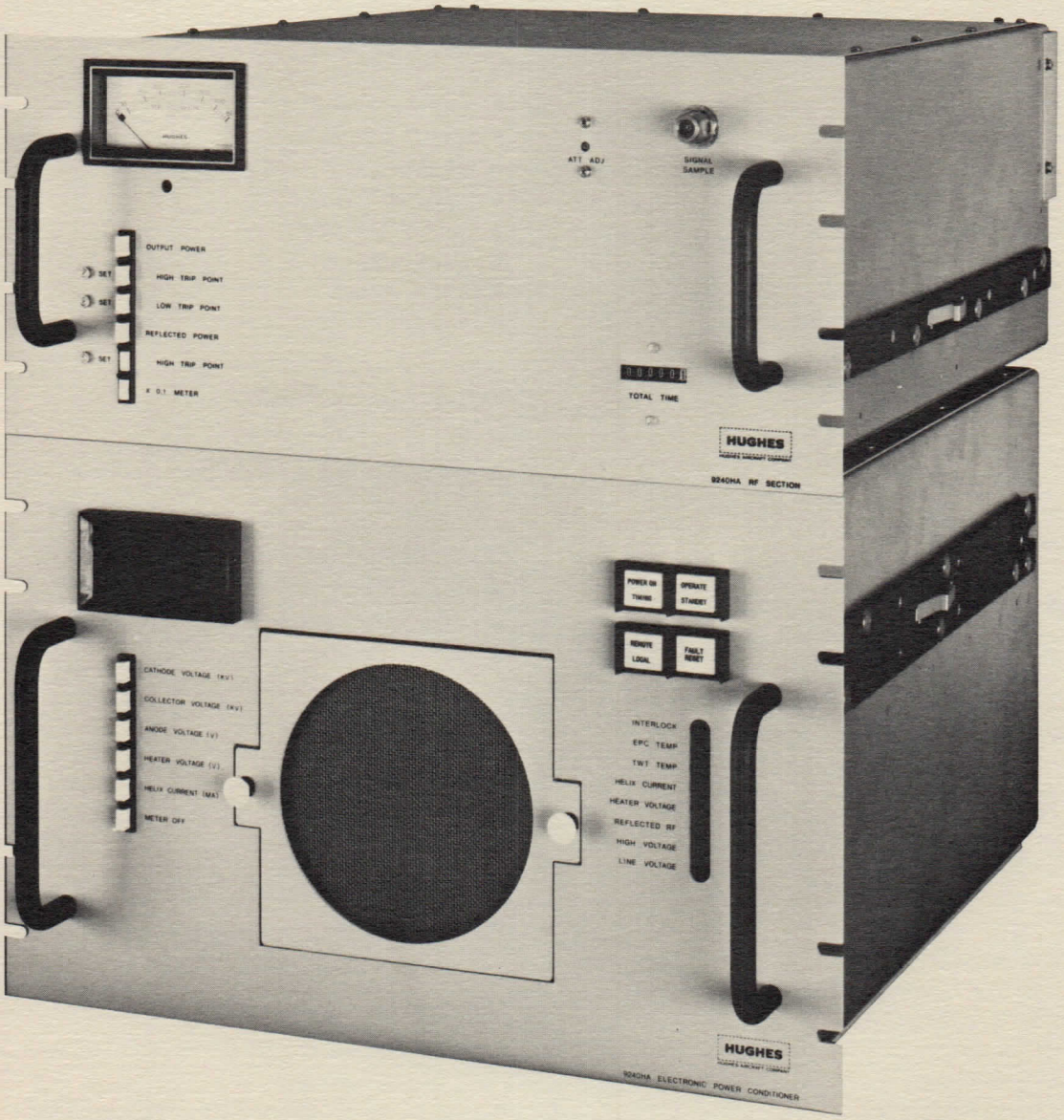

FEATURES

- Programmable TWT Voltages
- High Reliability
- Automatic Recycle Provisions
- Protective Features
- Low Power Consumption
- Fault Indicators
- Remote-Local Control
- Increased Stand By TWT Life
- Replaceable Modular Design
- Operational Status Indicators
- Rugged Metal-Ceramic Traveling-Wave Tube
- Integral Cooling Systems
- Ease of Maintenance
- Full One Year Warranty — No Hour Limit
- Optional Redundant and Power Combined Subsystems

DESCRIPTION

The Hughes Model 9225HA04 Communications Power Amplifier Subsystem consists of two assemblies; the RF and power conditioner drawers. The RF drawer contains the Hughes Model 881H TWT and associated RF components. The electronic power conditioner drawer generates the necessary voltages for the RF drawer and contains all the logic and control functions. This subsystem is designed to operate as the output transmitter in a commercial satellite communication system. The design takes into account all ICSC transmission requirements.

OPERATIONAL FEATURES

Controls

- Variable RF Input Attenuator (0 to -20 dB)**
- Output Power (forward)
  - High Trip Point Set
  - Low Trip Point Set
- Reflected Power
  - High Trip Point Set
- Power On-Off*
- Operate/Stand-By*
- Remote-Local
- Fault/Reset (lamp test)*
- Meter Range Select (2 ranges)

Operational Status Indicators (front panel)

- Power on*
- Timing*
- Operate/Stand-By*
- Fault*
- Remote/Local*

Remote Control Interface Connector (rear panel)

- Operational status indicators, metering and control switches indicated with an * can be switched to a remote control interface connector to provide a ready means of remote control and indication.

Protection

- Prime Power Circuit Breaker (one)
- TWT Warm-up Time Delay
- Automatic Sequencing of High Voltage and Beam Current
- Helix Current Overload
- High or Low Cathode Voltage (including arc)
- High Temperature (TWT and power supply)
- Low Line Voltage
- High Reflected Power
- System and Safety Interlocks
- Reduced Heater (TWT) Power During Stand-By Operation

Metering

- Output Power**
- High Trip Point
- Low Trip Point
- Reflected Power
- High Trip Point
- IPA Power (optional)
- Collector Voltage**
- Cathode Voltage**
- Anode Voltage
- Heater Voltage**
- Helix Current**

RF Signal Sample Ports

- Output Sample (-47 dBc nominal)
- IPA Output Sample (optional -20 dBc nominal)

Fault Indicators (front panel)

- Reflected RF
- Helix Current Overload
- High Voltage (high/low or arc)
- TWT Temperature (high)
- EPC Temperature (high)
- Line Voltage (low)
- Interlock (open)
- Heater Voltage (high)

Automatic Recycle Provisions

- 2 Faults/10 Second Interval Automatic Reset

Fault Summary (remote only)

- EPC Alarm — Indicates Either EPC Temperature or Filament Voltage
- HPA Alarm — Indicates Either High Voltage, Interlock Open, or High Reflected Power
- TWT Alarm — Indicates Either TWT Temperature or Helix Overcurrent

*These functions are available at remote interface.

**Consult factory if these functions are required remotely.

SPECIFICATIONS*

RF Performance (typical)

Frequency	14.0 to 14.5 GHz
Bandwidth	500 MHz minimum
Power Output (CW)	225 W minimum
Gain (with solid state driver)	
At Rated Power	62 dB minimum
Small Signal	67 dB minimum
Stability	±0.25 dB/24 hours
Control (continuous)	0 to -20 dB
Settability	± 0.1 dB
Variation (over 500 MHz band)	±1.5 dB maximum**
Slope (over 50 MHz band)	0.02 dB/MHz maximum**
Gain (without solid state driver)	
At Rated Power	40 dB minimum
Small Signal	46 dB minimum
Group Delay (any 50 MHz band)	
Parabolic	0.05 ns/MHz^2 maximum
Linear	0.1 ns/MHz maximum
Ripple	1.0 ns peak-to-peak maximum
VSWR	
Input	1.3:1 maximum
Output (non-operating)	1.2:1 maximum
Load (normal operation)	2.0:1 maximum
AM/PM Conversion (@ rated power)	6°/dB maximum
Noise and Spurious	
11.0—12.2 GHz (with optional filter)	-130 dBW/4 KHz maximum
9.4 to 18.0 GHz	-65 dBW/4 KHz maximum
18.0 to 40 GHz	-110 dBW/MHz maximum
Noise Figure	
With Solid State Driver	18 dB maximum
Without Solid State Driver	38 dB maximum
Residual AM (referred to single carrier at rated output power)	
Below 10 KHz	-40 dB maximum
10 KHz to 500 KHz	-20 (1 + $\log_{10}$ f) dB maximum
Above 500 KHz	-80 dB maximum
Residual FM	-60 dBc maximum
Harmonic Output (at rated output power)	-60 dBc maximum
IM (3rd Order two equal carriers, 3 W each)	-25 dBc maximum

Electrical

Input Voltage	120/208 VAC ± 10% 50/60 Hz ± 5% three phase, 5 wire***
Input Power	2.0 kVA
Power Factor	0.9 minimum

Mechanical

Cooling (integral blowers)	forced air
Weight	
RF Drawer	45 pounds (22.7 kg) maximum
Power Conditioner Drawer	120 pounds (54.4 kg) maximum
Dimensions	
RF Drawer	19 inches wide X 8 3/4 inches high X 24 inches deep (48.3 cm X 22.2 cm X 61.0 cm)
Power Conditioner Drawer	19 inches wide X 12 1/4 inches high X 22 inches deep (48.3 cm X 31.1 cm X 55.9 cm)
Mounting	rack with non-tilting chassis slides
Connectors	
RF Input	type SMA
RF Output	UG 419/U (WR62 flat)
RF Signal Sample	type N female

Environmental

Temperature (operating)	0 to +50°C****
Relative Humidity (without condensation)	95% maximum
Altitude	10,000 feet maximum
Shock and Vibration	as normally encountered in commercial shipping and handling

*Specifications subject to change without prior notice.
**Measured with 0 dB input attenuation.
***220/240 VAC single phase optional.
****40°C maximum operating temperature above 6,000 feet.

BLOCK DIAGRAMS

Typical RF Drawer

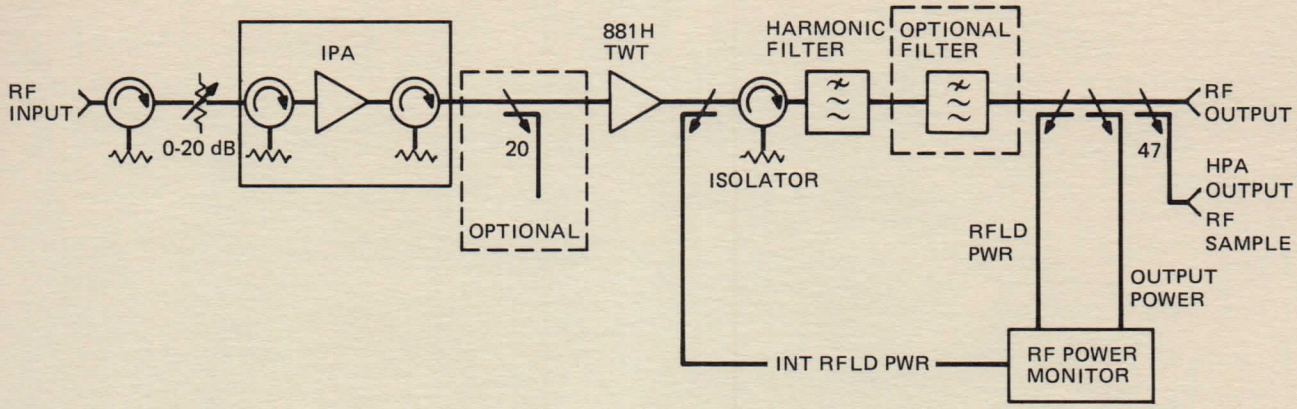

RF Components

- Input Isolator
- Input Variable Attenuator (0 to -20 dB)
- IPA (solid state driver)
- Input Power Sample/Monitor (optional)
- Tube
- Internal Reflected Power Detector
- Output Isolator, Terminated
- Harmonic Filter
- Filter (optional)
- Reflected Power Monitor
- Output Power Monitor
- Output RF Sample (-47 dBc)

Power Conditioner Drawer

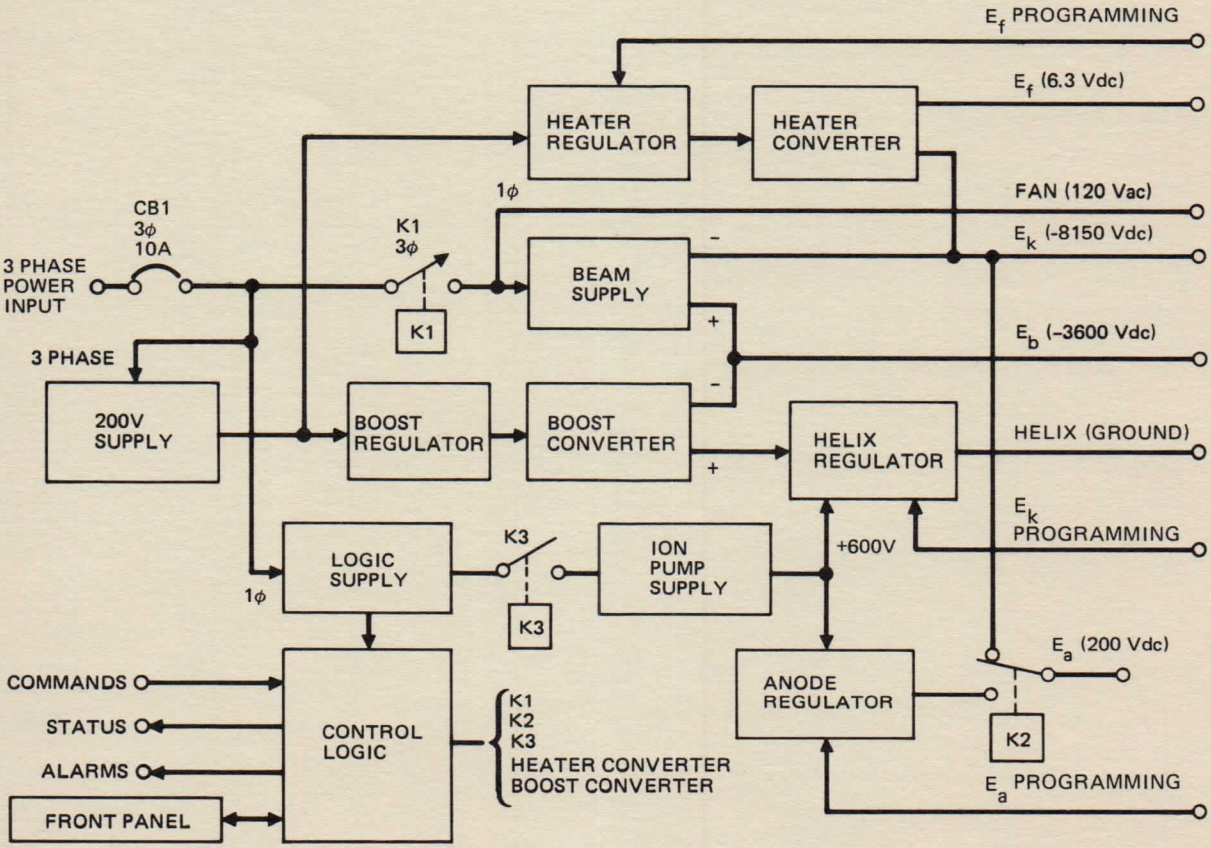

EPC BLOCK DIAGRAM

TYPICAL PERFORMANCE CURVES *

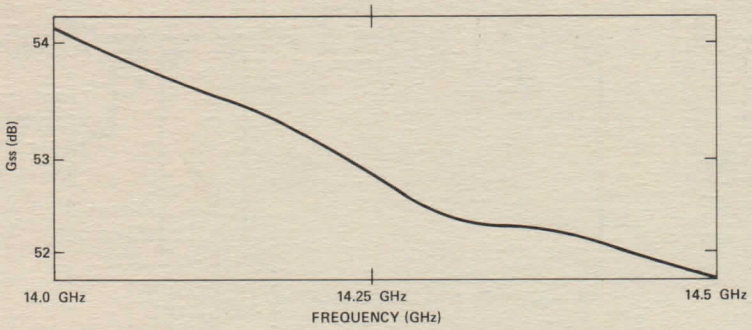

SMALL SIGNAL GAIN VS FREQUENCY
–10 dB BELOW SATURATION

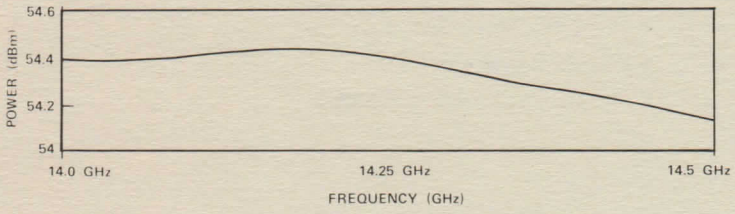

SATURATED POWER OUTPUT VS FREQUENCY

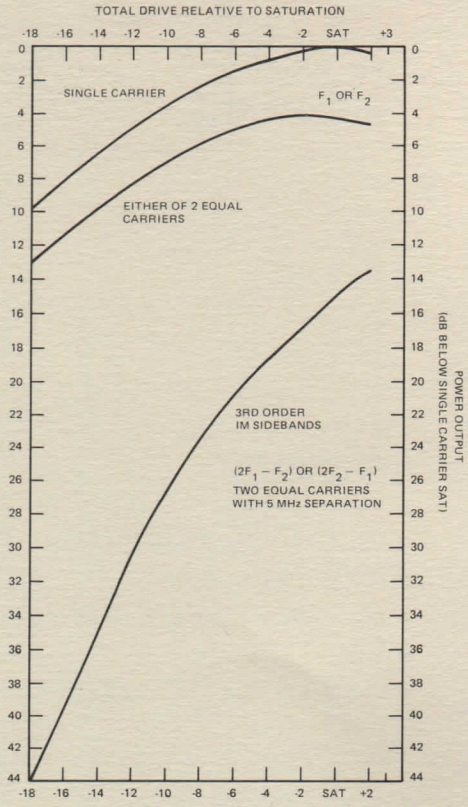

INTERMODULATION DISTORTION

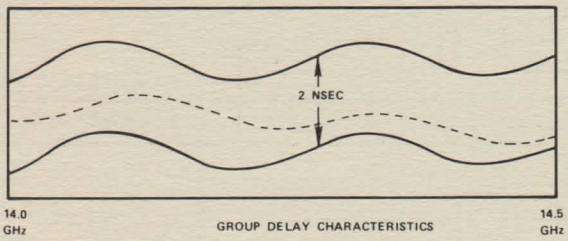

GROUP DELAY CHARACTERISTICS

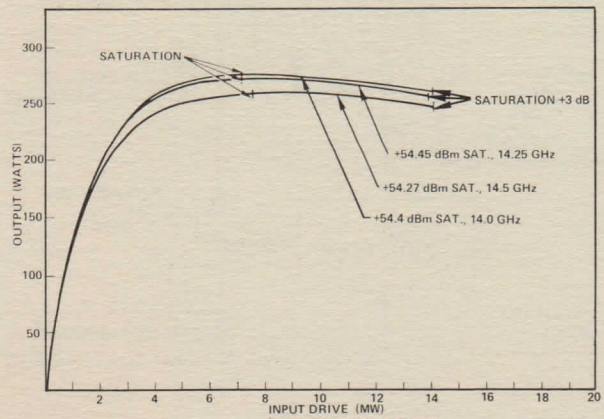

INPUT/OUTPUT TRANSFER CURVE
MODEL 881HA

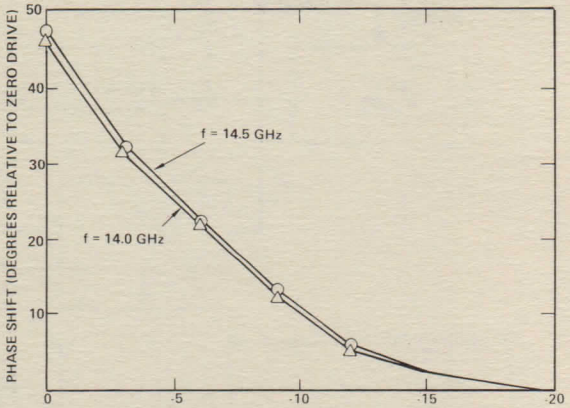

PHASE SHIFT VERSUS DRIVE

*Without Solid State Driver

9225HA04 COMMUNICATIONS HPA SUBSYSTEM 14 GHz 250 W

HUGHES

HUGHES AIRCRAFT COMPANY

ELECTRON DYNAMICS DIVISION

OUTLINE DRAWINGS

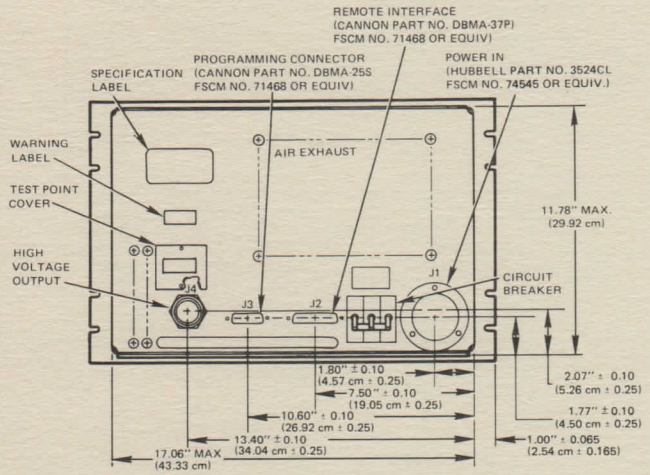

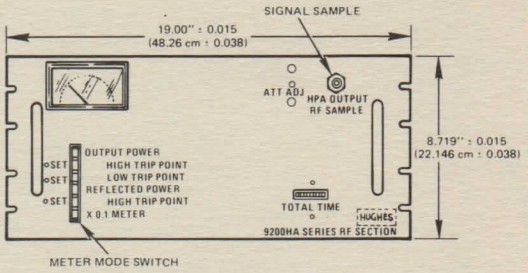

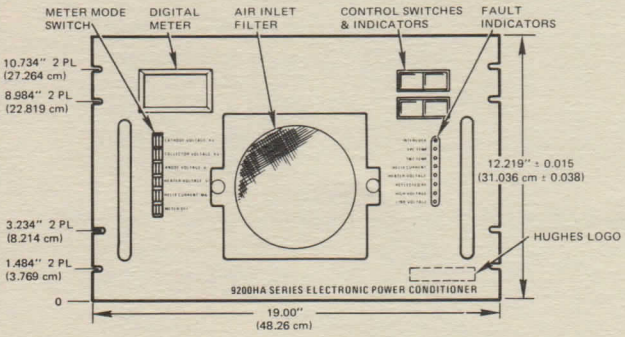

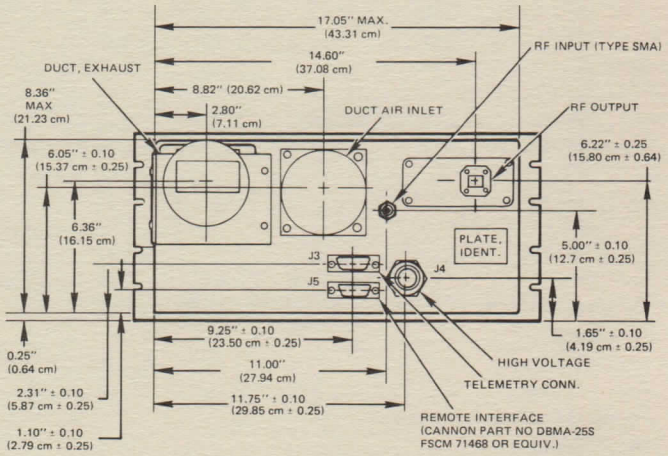

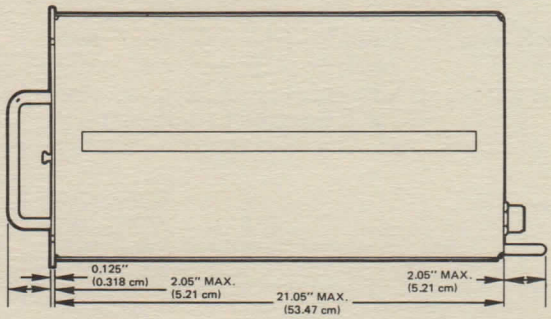

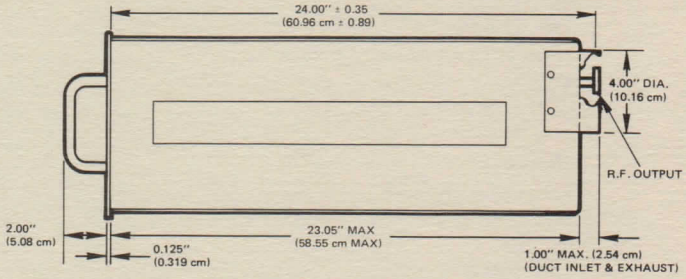

HUGHES
HUGHES AIRCRAFT COMPANY
ELECTRON DYNAMICS DIVISION 3100 West Lomita Boulevard, P. O. Box 2999, Torrance, California 90509, Tel (213) 517-6000

PRINTED IN USA 1/82 AL

HUGHES

HUGHES AIRCRAFT COMPANY

ELECTRON DYNAMICS DIVISION

9240HA02 COMMUNICATIONS HPA SUBSYSTEM 6 GHz 400 W

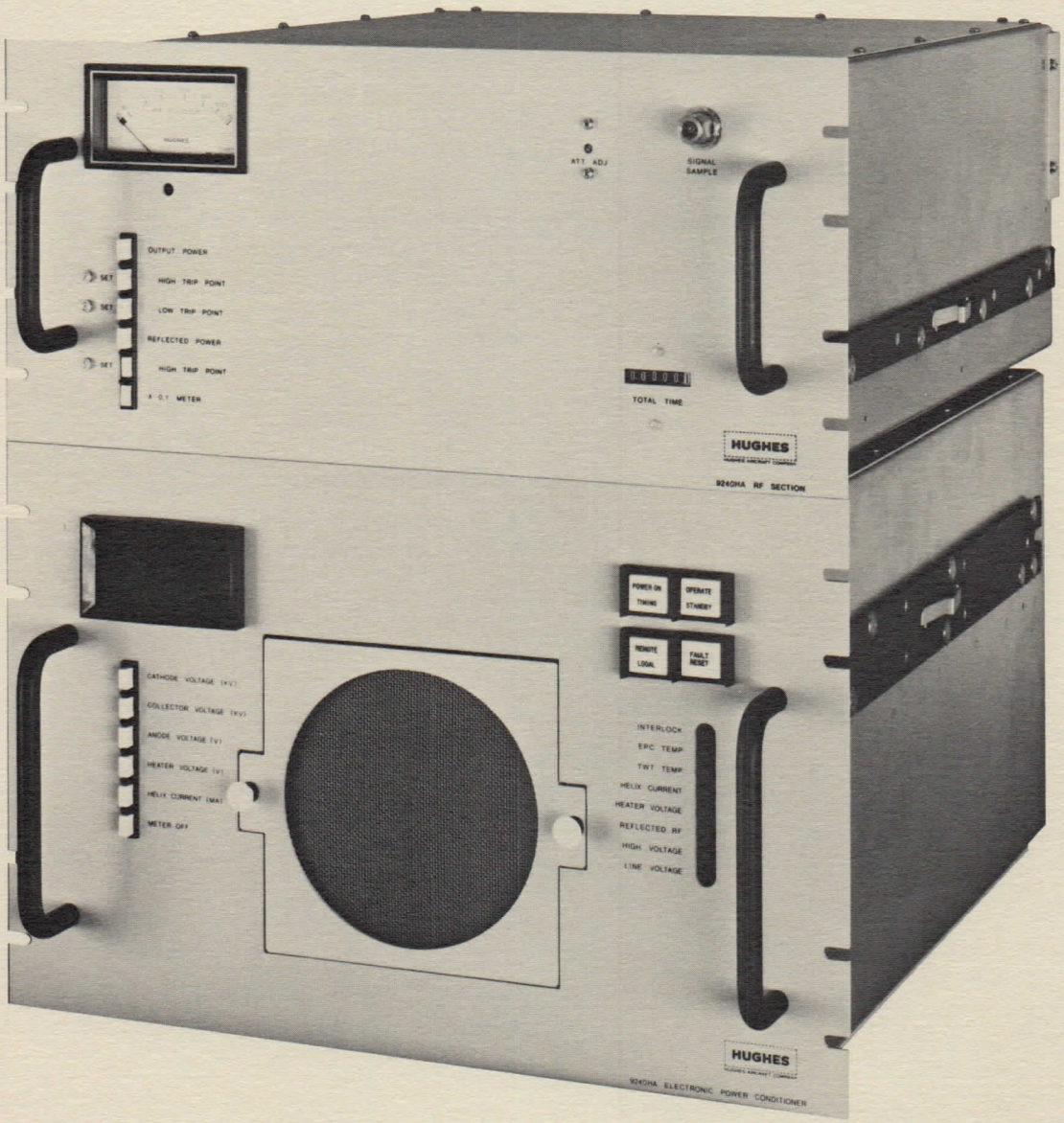

FEATURES

- Programmable TWT Voltages
- High Reliability
- Automatic Recycle Provisions
- Protective Features
- Low Power Consumption
- Fault Indicators
- Remote-Local Control
- Increased Stand-By TWT Life
- Replaceable Modular Design
- Operational Status Indicators
- Rugged Metal-Ceramic Traveling-Wave Tube
- Integral Cooling Systems
- Ease of Maintenance
- Full One Year Warranty – No Hour Limit
- Optional Redundant and Power Combined Subsystems

DESCRIPTION

The Hughes Model 9240HA02 Communications Power Amplifier Subsystem consists of two assemblies; the RF and power conditioner drawers. The RF drawer contains the Hughes Model 662HA TWT and associated RF components. The electronic power conditioner drawer generates the necessary voltages for the RF drawer and contains all the logic and control functions. This subsystem is designed to operate as the output transmitter in a commercial satellite communication system. The design takes into account all ICSC transmission requirements.

OPERATIONAL FEATURES

Controls

- Variable RF Input Attenuator (0 to –20 dB)
- Output Power (forward)
  - High Trip Point Set
  - Low Trip Point Set
- Reflected Power
  - High Trip Point Set
- Power On-Off*
- Operate/Stand-By*
- Remote-Local
- Fault/Reset (lamp test)*
- Meter Range Select (2 ranges)

Operational Status Indicators (front panel)

- Power on*
- Timing*
- Operate/Stand-By*
- Fault*
- Remote/Local*

Remote Control Interface Connector (rear panel)

- Operational status indicators, metering and control switches, indicated with an *, can be switched to a remote control interface connector to provide a ready means of remote control and indication.

Protection

- Prime Power Circuit Breaker (one)
- TWT Warm-up Time Delay
- Automatic Sequencing of High Voltage and Beam Current
- Helix Current Overload
- High or Low Cathode Voltage (including arc)
- High Temperature (TWT and power supply)
- Low Line Voltage
- High Reflected Power
- System and Safety Interlocks
- Reduced Heater (TWT) Power During Stand-By Operation

*These functions are available at remote interface

Metering

- Output Power
  - High Trip Point
  - Low Trip Point
- Reflected Power
  - High Trip Point
- IPA Power (optional)
- Collector Voltage
- Cathode Voltage
- Anode Voltage
- Heater Voltage
- Helix Current

RF Signal Sample Ports

- Output Sample (–50 dBc nominal)
- IPA Output Sample (optional –20 dBc nominal)

Fault Indicators (front panel)

- Reflected RF
- Helix Current Overload
- High Voltage (high/low or arc)
- TWT Temperature (high)
- EPC Temperature (high)
- Line Voltage (low)
- Interlock (open)
- Heater Voltage (high)

Automatic Recycle Provisions

- 2 Faults/10 Second Interval Automatic Reset

Fault Summary (remote only)

- EPC Alarm – Indicates Either EPC Temperature or Heater Voltage Faults
- HPA Alarm – Indicates Fault Summary
- TWT Temperature Alarm – Indicates TWT Temperature Fault
- Helix Current Alarm – Indicates Helix Overcurrent Alarm

SPECIFICATIONS*

RF Performance (typical)

Frequency	5.925 to 6.425 GHz
Bandwidth	500 MHz minimum
Power Output (CW)	350 W minimum
Gain (with solid state driver)	
At Rated Power	70 dB minimum
Small Signal	75 dB typical
Stability	± 0.25 dB/24 hours
Control (continuous)	0 to −20 dB
Settability	± 0.1 dB
Variation (over 500 MHz band)	± 1.0 dB maximum**
Slope (over 40 MHz band)	0.02 dB/MHz maximum**
Gain (without solid state driver)	
At Rated Power	38 dB minimum
Small Signal	44 dB minimum
Group Delay (any 40 MHz band)	
Parabolic	0.05 ns/MHz^2 maximum
Linear	0.1 ns/MHz maximum
Ripple	1.0 ns peak-to-peak maximum
VSWR	
Input	1.3:1 maximum
Output (non-operating)	1.2:1 maximum
Load (normal operation)	2.0:1 maximum
AM/PM Conversion (@ rated power)	5°/dB maximum
Noise and Spurious	
3.7 to 4.2 GHz band	−130 dBW/4 kHz maximum
4.2 to 12.0 GHz band	−65 dBW/4 kHz maximum
12.0 to 40.0 GHz band	−110 dBW/MHz maximum
Noise Figure	
With Solid State Driver	18 dB maximum
Without Solid State Driver	37 dB maximum
Residual AM (referred to single carrier at rated output power)	
Below 10 kHz	-40 dB maximum
10 kHz to 500 kHz	$-20\ (1 + \log_{10} f)$ dB maximum
Above 500 kHz	-80 dB maximum
Residual FM	-50 dBc maximum
Harmonic Output (at rated output power)	-60 dBc
IM @ −10 dB below rated power	-25 dBc maximum

Electrical

Input Voltage	120/208 VAC ± 10% 50/60 Hz ± 5% three phase, 5 wire***
Input Power	2.5 kVA maximum
Power Factor	0.9 minimum

Mechanical

Cooling (integral blowers)	forced air
Weight	
RF Drawer	50 pounds (22.7 kg) maximum
Power Conditioner Drawer	120 pounds (54.4 kg) maximum
Dimensions	
RF Drawer	19 inches wide X 8 3/4 inches high X 24 inches deep (48.3 cm X 22.2 cm X 61.0 cm)
Power Conditioner Drawer	19 inches wide X 12 1/4 inches high X 22 inches deep (48.3 cm X 31.1 cm X 55.9 cm)
Mounting	rack with non-tilting chassis slides
Connectors	
RF Input	type N female
RF Output	CPR-137F
RF Signal Sample	type N female

Environmental

Temperature (operating)	0 to 50°C
Relative Humidity (without condensation)	95% maximum
Altitude	10,000 feet maximum****
Shock and Vibration	as normally encountered in commercial shipping and handling

*Specifications subject to change without prior notice.

**At rated output and gain.

***220/240 VAC single phase optional.

****40°C maximum operating temperature above 6,000 ft.

BLOCK DIAGRAMS

Typical RF Drawer

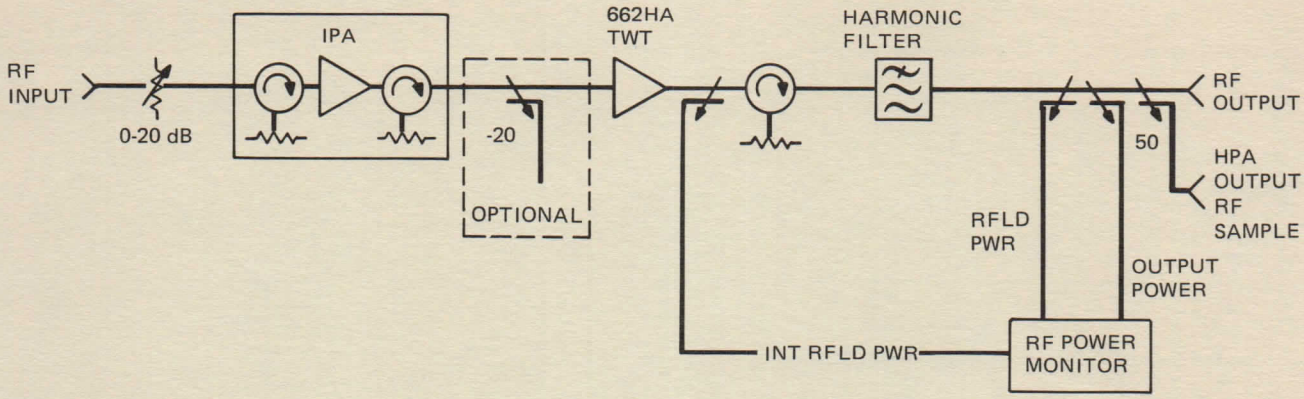

RF Components

- Input Variable Attenuator (0 to –20 dB)
- IPA (solid state driver)
- Input Power Sample/Monitor (optional)
- Traveling-Wave Tube
- Internal Reflected Power Detector
- Output Isolator, Terminated
- Harmonic Filter
- Reflected Power Monitor
- Output Power Monitor
- Output RF Sample (–50 dBc)

Power Conditioner Drawer

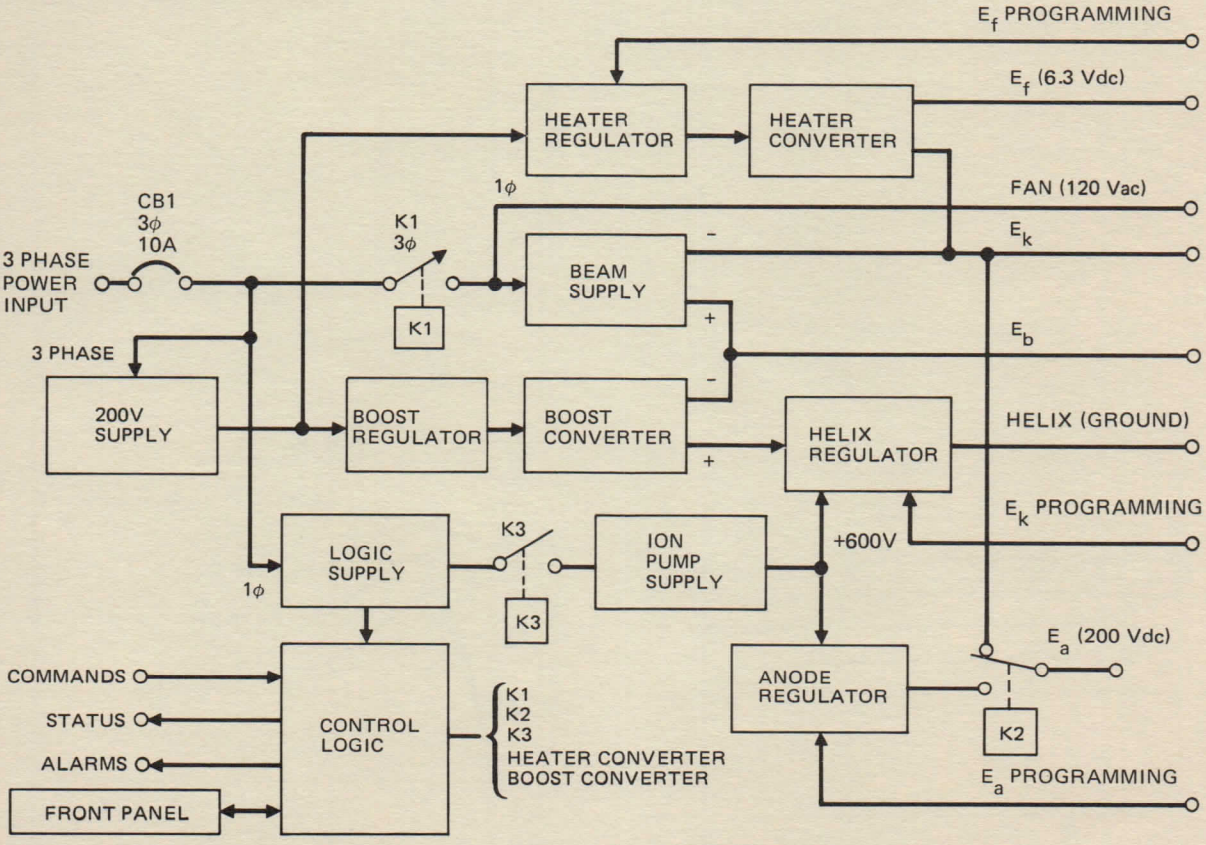

EPC BLOCK DIAGRAM

TYPICAL PERFORMANCE CURVES

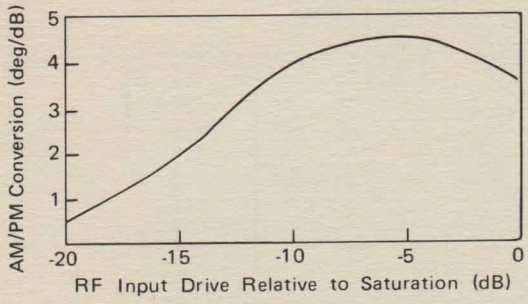

AM/PM CONVERSION VERSUS INPUT DRIVE

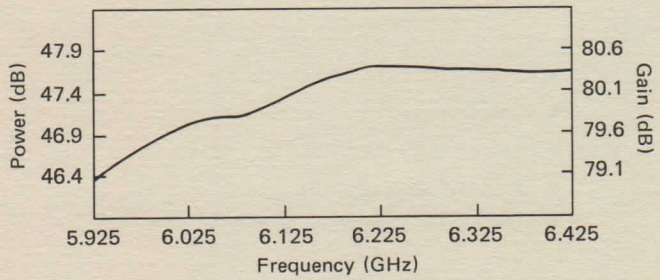

SMALL SIGNAL CHARACTERISTICS

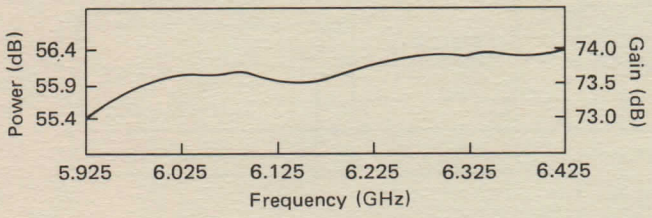

RATED POWER OUTPUT VERSUS FREQUENCY

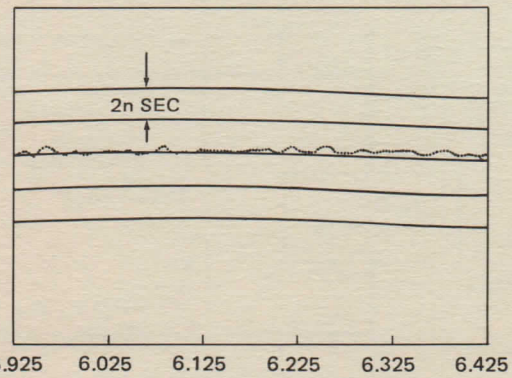

GROUP DELAY VERSUS FREQUENCY

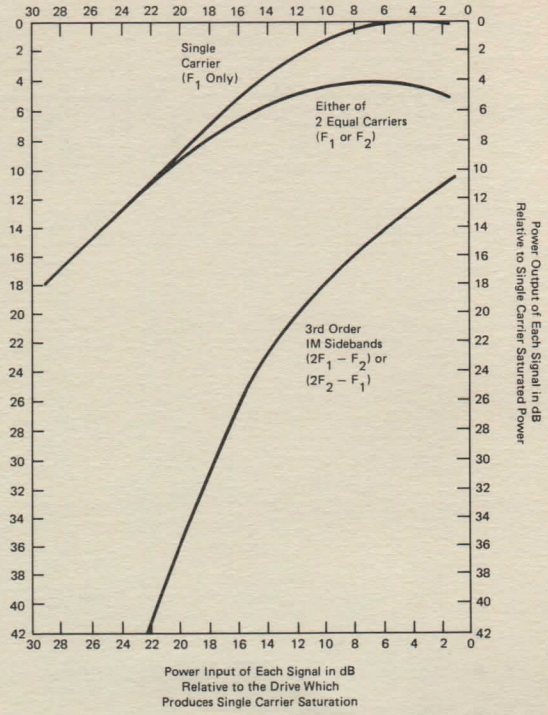

THIRD ORDER INTERMODULATION PRODUCT AS A FUNCTION OF RF POWER INPUT

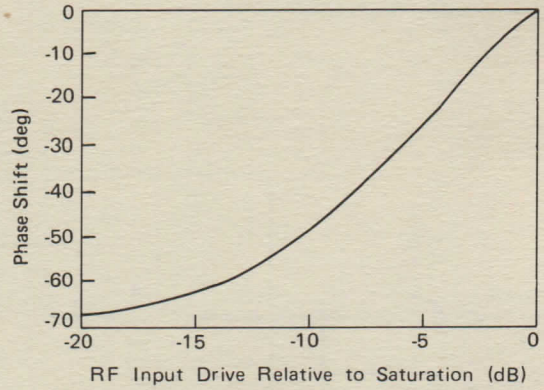

PHASE SHIFT VERSUS INPUT DRIVE

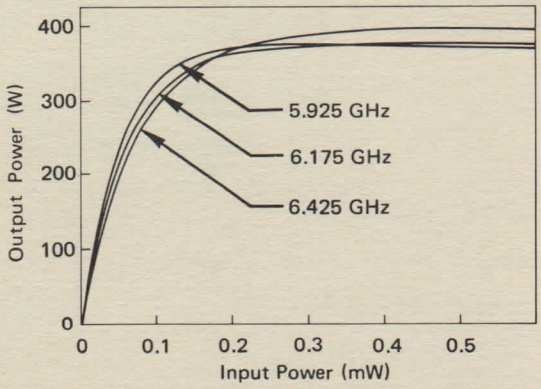

OUTPUT POWER VERSUS INPUT POWER

9240HA02 COMMUNICATIONS HPA SUBSYSTEM 6 GHz 400 W

HUGHES

HUGHES AIRCRAFT COMPANY

ELECTRON DYNAMICS DIVISION

OUTLINE DRAWINGS

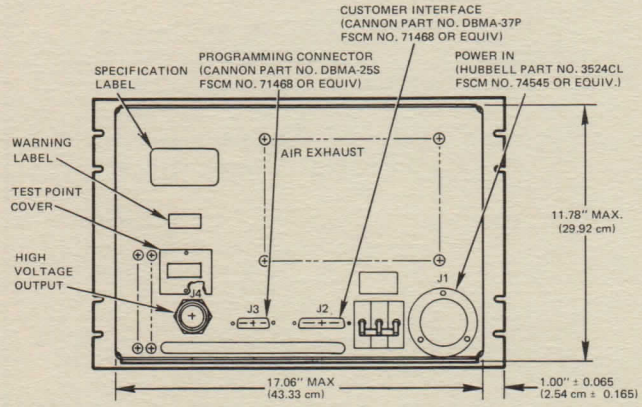

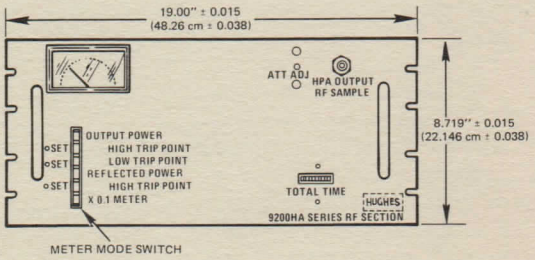

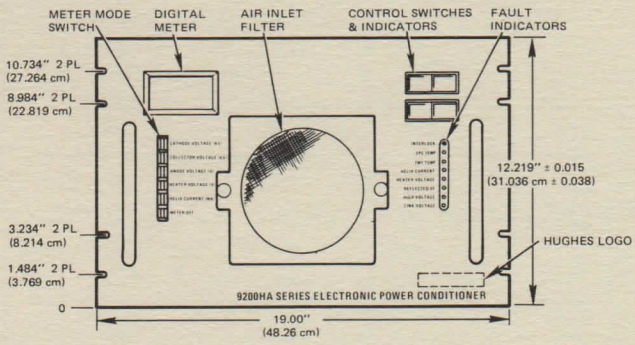

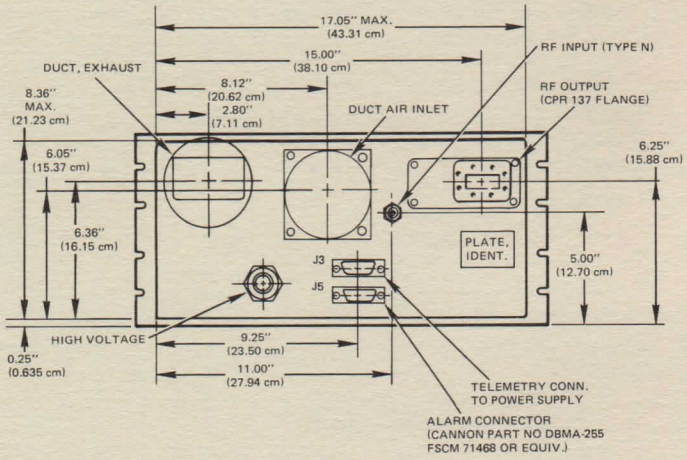

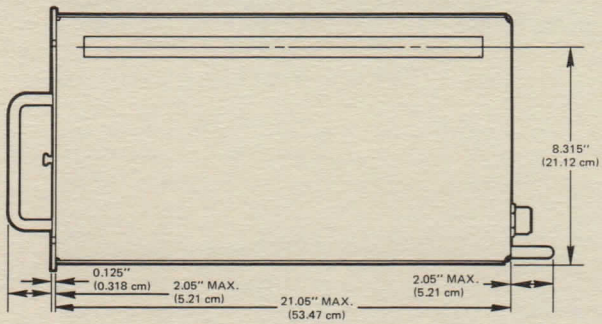

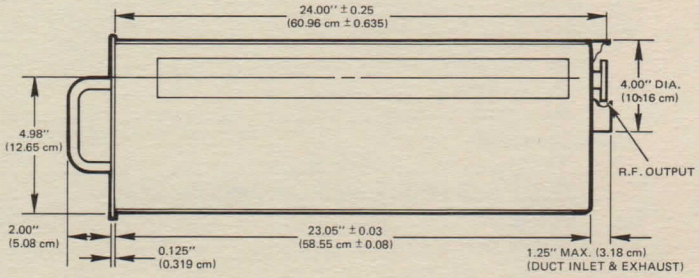

HUGHES
HUGHES AIRCRAFT COMPANY
ELECTRON DYNAMICS DIVISION 3100 West Lomita Boulevard, P. O. Box 2999, Torrance, California 90509, Tel (213) 517-6000

PRINTED IN USA 5/82 AL

HUGHES

HUGHES AIRCRAFT COMPANY

ELECTRON DYNAMICS DIVISION

9300HA REDUNDANT CONTROL UNIT FAMILY

FULL WAVEGUIDE BANDWIDTH C, X, OR Ku BAND

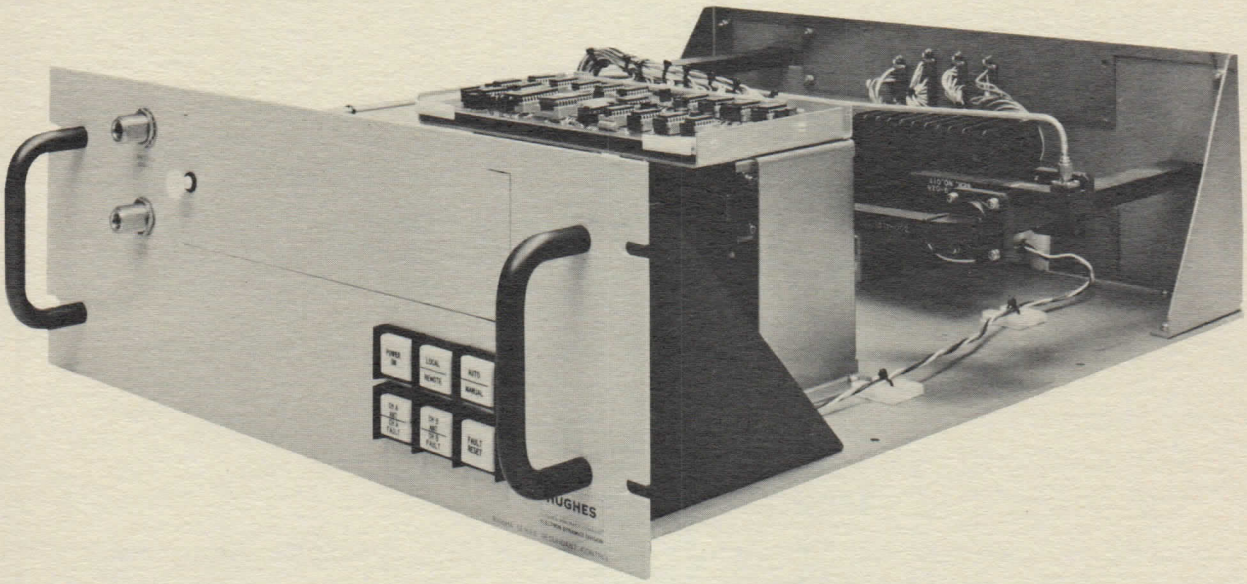

FEATURES

- Redundant Operation of Two HPAs
- Automatic or Manual Switching
- Status Indicators
- Fault Indicators
- Remote or Local Control
- High Reliability
- Remote Status
- Modular Design for Ease of Maintenance
- Switches Safely with RF Gating
- Rapid Switching/Selectable Logic Protocol
- Designed for Optional Use in TDMA Type Application

DESCRIPTION

The Hughes Model 9300HA Redundant Control Unit consists of one rack mountable drawer. It is designed to provide fully automatic monitoring and switching for dual transmitter satellite communication systems requiring redundant operation. The internal logic is designed to initiate appropriate switching upon receipt of faults in RF output, power supply, user system faults, or missing TDMA pulses (optional). Extreme user flexibility of logic protocol is made possible by the Eprom-based controller.

The high power circuit of this assembly consists of an RF switch, high power load and appropriate waveguide interconnects, all actuated by the control logic and integral power supply. Input power switching or splitting can be provided as an option.

OPERATIONAL FEATURES

Controls

- Channel A to Antenna*
- Channel B to Antenna*
- Auto/Manual*
- Power On/Off
- Local/Remote
- Fault Reset*
- Lamp Test*
- Manual Wave Guide Switch Front Panel Access

RF Signal Sample

- RF Power to Antenna Port (-45 dbc)
- RF Power to Load Port (-45 dbc)

Operational Status Indicators

- Channel A to Antenna*
- Channel A Fault*
- Channel B to Antenna*
- Channel B Fault*
- Summary Fault*
- Auto Operation*
- Manual Operation*
- Power On*
- Local Operation
- Remote Operation*
- Fault Reset

*These functions are available at remote control interface or on optional remote control panel in addition to TDMA A, TDMA B, and RF fault indications.

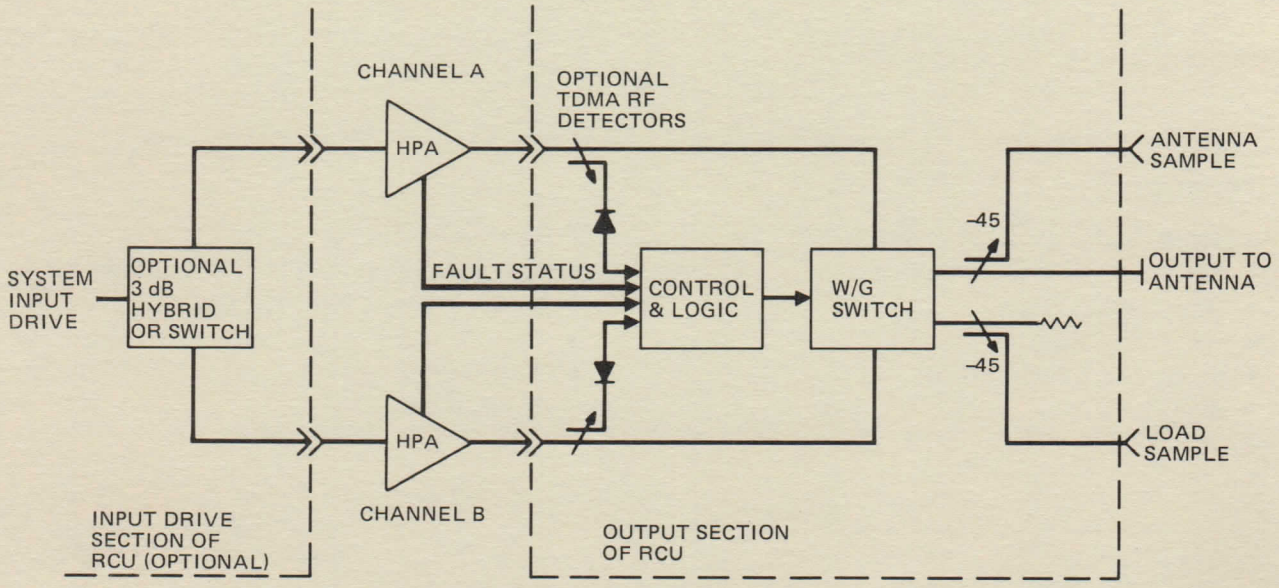

TYPICAL SYSTEM BLOCK DIAGRAM

SPECIFICATIONS[1]

RF Performance (typical)

Frequency . . . . . see model number chart (below)
Bandwidth . . . . . full band
Power Handling . . . . . 500 W maximum/channel[2]
Isolation Between Ports . . . . . .70 dB minimum
Insertion Loss
- Drive Section (optional) . . . . . 0.5 dB typical[5, 6]
- Output Section . . . . . 0.4 dB maximum[6]

VSWR
- Drive Section Ports . . . . . 1.3:1 maximum[4]
- Output Section Ports . . . . . 1.2:1 maximum[4]
- Load (normal operation) . . . . . 2.0:1 maximum

Switching Speed . . . . . 100 milliseconds maximum

Electrical

Input Voltage . . . . . .115/230 ± 10% 50/60 Hz ± 5% single phase, 3 wire
Input Power . . . . . < 75 watts

Mechanical

Weight . . . . . 30 pounds (13.6 kg)
Dimensions . . . . . 19 inches wide X 7 inches high X 26 inches deep (48.3 cm X 17.8 cm X 66.0 cm)
Mounting . . . . . rack with non-movable angles
Connectors
- RF Signal Samples . . . . . type N female

Environmental

- Temperature (operating) . . . . . .0 to +50° C
- Relative Humidity (without condensation) . . . . . .95% maximum
- Altitude . . . . . .10,000 feet maximum[3]
- Shock and Vibration . . . . . as normally encountered in commercial shipping and handling

[1] Specifications subject to change without prior notice.

[2] 500 W rated dry load standard, other load ratings available.

[3] 40°C maximum operating temperature above 6,000 feet.

[4] Measured when RCU is connected to a load VSWR of 1.05:1 or better. Actual measurement when connected in a system will be a function of the VSWR to which this drawer is connected. Typically these will be better than 1.5:1 for overall subsystem.

[5] 3 dB offset for power splitting is not included in these measurements.

[6] These measurements do not include subsystem losses associated with connecting the RCU to an RF drawer in a typical subsystem. The losses associated with subsystem interconnections are as follows:

	Subsystem	RCU	Total
Drive Section	1.0	0.5	1.5 dB maximum
Output Section	0.2	0.4	0.6 dB maximum

MODEL	FREQUENCY BAND	OUTPUT RF CONNECTORS	OPTIONAL DRIVE SECTION CONNECTORS
9300HA02	5.8 – 8.2 GHz	WR-137 choke flange	Type N
9300HA03	7.0 – 10.0 GHz	WR-112 choke flange	Type N
9300HA04	10 – 15 GHz	WR-75 choke flange	Type SMA

9300HA REDUNDANT CONTROL UNIT FAMILY

FULL WAVEGUIDE BANDWIDTH
C, X, OR Ku BAND

HUGHES

HUGHES AIRCRAFT COMPANY

ELECTRON DYNAMICS DIVISION

OUTLINE DRAWINGS

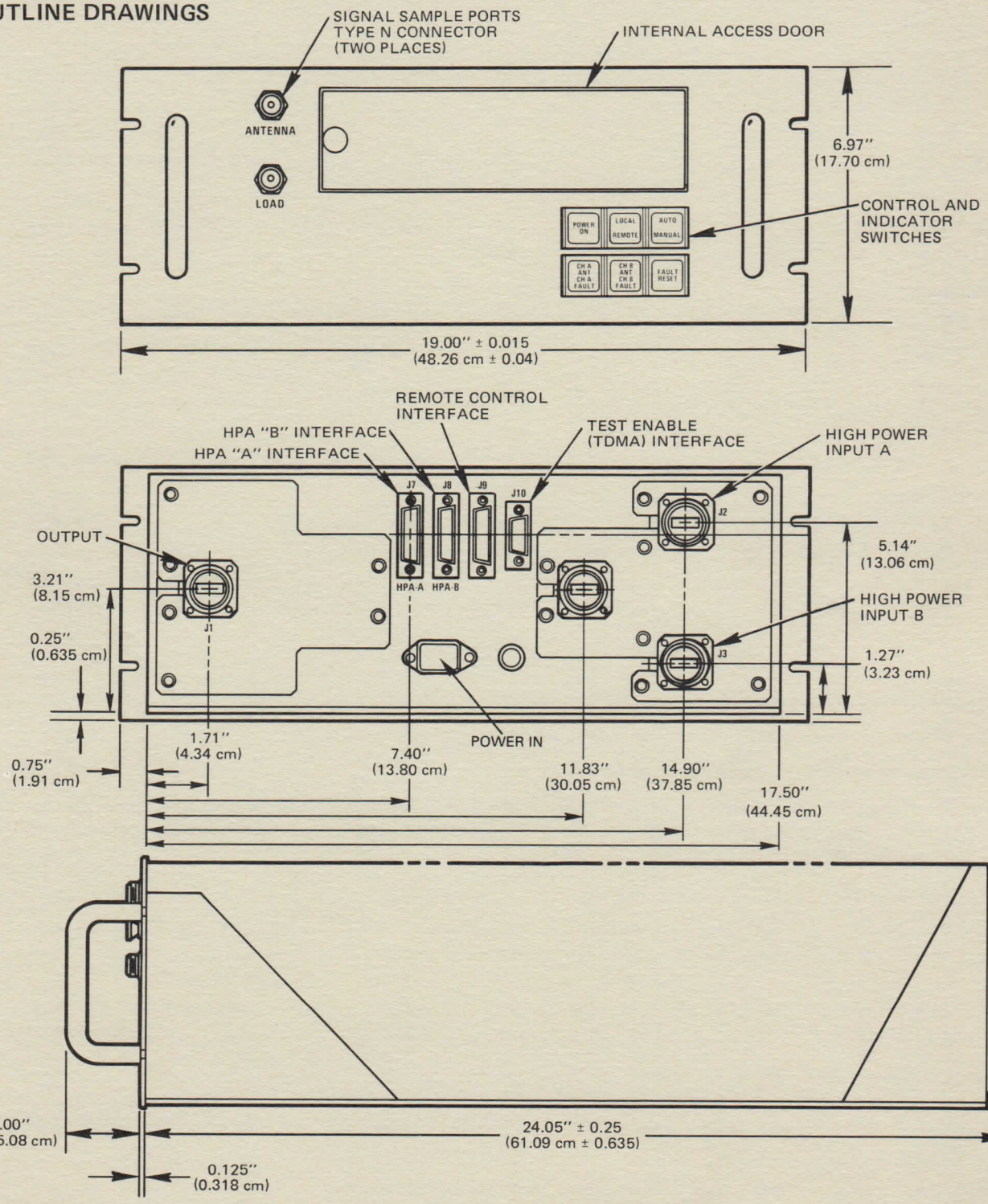

HUGHES ELECTRON DYNAMICS DIVISION 3100 West Lomita Boulevard, P.O. Box 2999, Torrance, California 90509, Tel (213) 517-6000

HUGHES AIRCRAFT COMPANY

PRINTED IN USA 7/83 AL

HUGHES

HUGHES AIRCRAFT COMPANY

ELECTRON DYNAMICS DIVISION

9345HA04 VARIABLE POWER COMBINER ASSEMBLY 14 GHz

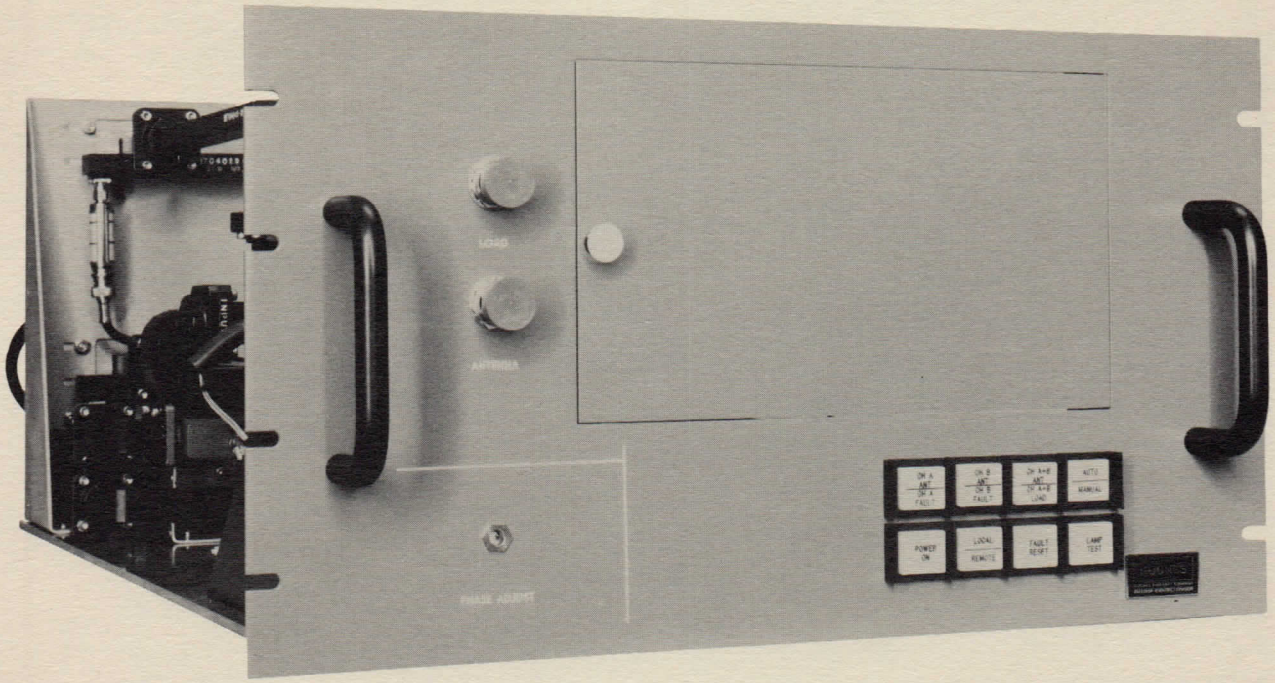

FEATURES

- Variable Ratio Power Combining of Two HPA's
- Redundant Operation of Two HPA's
- Automatic or Manual
- Status Indicators
- Fault Indicators
- Remote or Local Control
- Highly Reliable
- Easy to Maintain
- Switches Safely with
  - Full RF Power
  - Low VSWR
- Rapid Switching
- Designed for Optional Use in TDMA Type Application

DESCRIPTION

The Hughes Model 9345HA04 Variable Power Combiner consists of one rack mountable drawer. It is designed to provide fully automatic monitoring and switching for dual transmitter satellite communication systems requiring either redundant operation, combined power output or fail soft operation in a normally power combined mode. The internal logic is designed to initiate appropriate mode switching upon receipt of faults in RF output, power supply or missing TDMA pulses (optional).

The high power circuit of this assembly consists of an RF switch, high power load and appropriate waveguide plumbing, all actuated by control logic and associated power supply. The low power input waveguide is composed of a power divider and phase shifter.

OPERATIONAL FEATURES

Controls

- Channel A to Antenna*
- Channel B to Antenna*
- Channel A+B to Antenna*
- Auto/Manual*
- Power On/Off
- Local/Remote
- Fault Reset*
- Lamp Test*
- Phase Adjust
- Manual Combiner Switch (internal)
- Channels A+B to Load (manually selectable internally only)

Operational Status Indicators

- Channel A to Antenna*
- Channel A Fault*
- Channel B to Antenna*
- Channel B Fault*
- Channel A+B to Antenna*
- Channel A+B to Load (manually selectable)*
- Auto Operation*
- Manual Operation*
- Power On*
- Local Operation
- Remote Operation*
- Fault Reset
- Lamp Test

RF Signal Sample

- RF Power to Antenna Port (-45 dbc)
- RF Power to Load Port (-45 dbc)

*These functions are available at remote control interface or on optional remote control panel in addition to TDMA A, TDMA B, and RF fault indications.

SPECIFICATIONS[1]

RF Performance (typical)

Frequency	14.0 to 14.5 GHz
Bandwidth	500 MHz minimum
Power Output (CW) at HPA	225 W minimum
at VPC (combined)	400 W minimum
Isolation	
Between High Power Input Ports	30 dB minimum
Between High Power Output Ports	40 dB minimum
Between Low Power Drive Ports	25 dB minimum
Insertion Loss	
Input Section	0.5 dB maximum[6, 7]
Output Section	0.5 dB maximum[6, 7]
Gain Variation (over 500 MHz band)	±1.5 dB maximum[2]
Gain Slope (over 50 MHz band)	0.05 dB/MHz maximum[2]
Group Delay (any 50 MHz band)	
Linear	0.1 ns/MHz maximum
Parabolic	0.05 ns/MHz^2 maximum
Ripple	1.0 ns peak-to-peak maximum
VSWR	
Input	1.2:1 maximum[4]
Output	1.2:1 maximum[4]
Load (normal operation)	2.0:1 maximum
Switching Speed	200 milliseconds maximum

Electrical

Input Voltage	115 ± 10% 50/60 Hz ± 5% single phase, 3 wire[5]
Input Power	<100 watts

Mechanical

Weight	50 pounds (22.7 kG)
Dimensions	19 inches wide X 10½ inches high X 26 inches deep (48.3 cm X 26.7 cm X 66.0 cm)
Mounting	rack with non-movable angles
Connectors	
RF Input	WR 75 choke flange
RF Output	WR 75 choke flange
RF Signal Samples	type N female

Environmental

Temperature (operating)	0 to +50° C
Relative Humidity (without condensation)	95% maximum
Altitude	10,000 feet maximum[3]
Shock and Vibration	as normally encountered in commercial shipping and handling

[1] Specifications subject to change without prior notice.

[2] Measured with 0 dB input attenuation.

[3] 40°C maximum operating temperature above 6,000 feet.

[4] Measured when VPC is connected to a load VSWR of 1.05:1 or better. Actual measurement when connected in a system will be a function of the VSWR to which this drawer is connected. Typically these will be better than 1.5:1 for overall subsystem.

[5] 230VAC operation is available as an option.

[6] 3 dB offset for power splitting and combining is not included in these measurements.

[7] These measurements do not include subsystem losses associated with connecting the VPC to an RF drawer in a typical subsystem. The losses associated with subsystem interconnections are as follows:

	Subsystem	VPC	Total
Input Section	1.0	0.5	1.5 dB maximum
Output Section	0.2	0.5	0.7 dB maximum

BLOCK DIAGRAMS

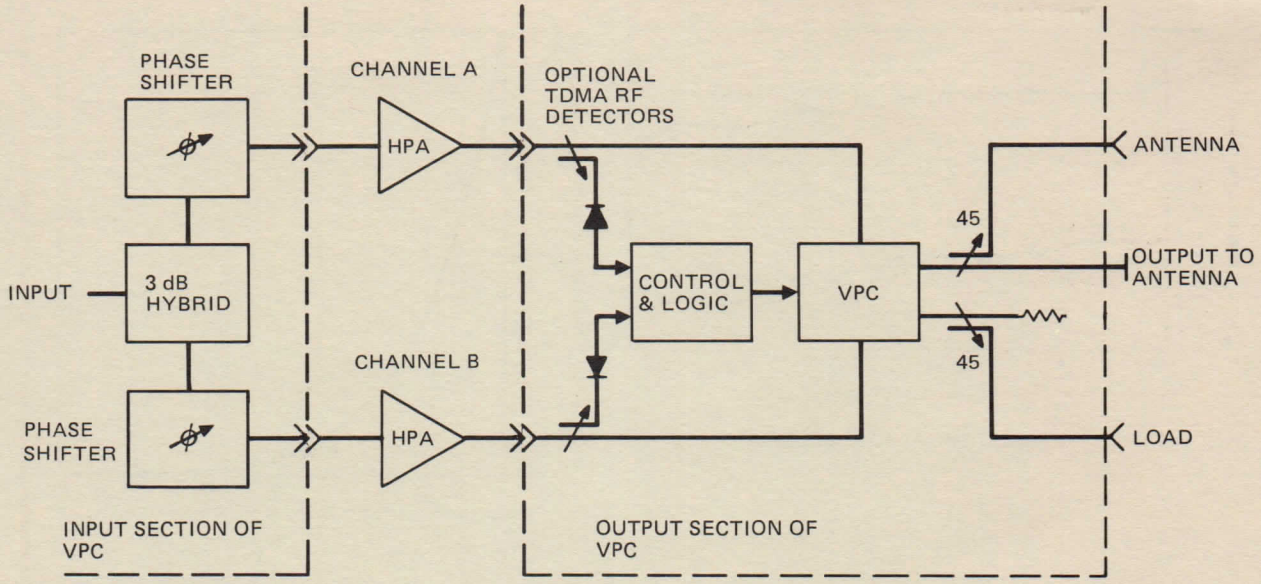

RF BLOCK DIAGRAM

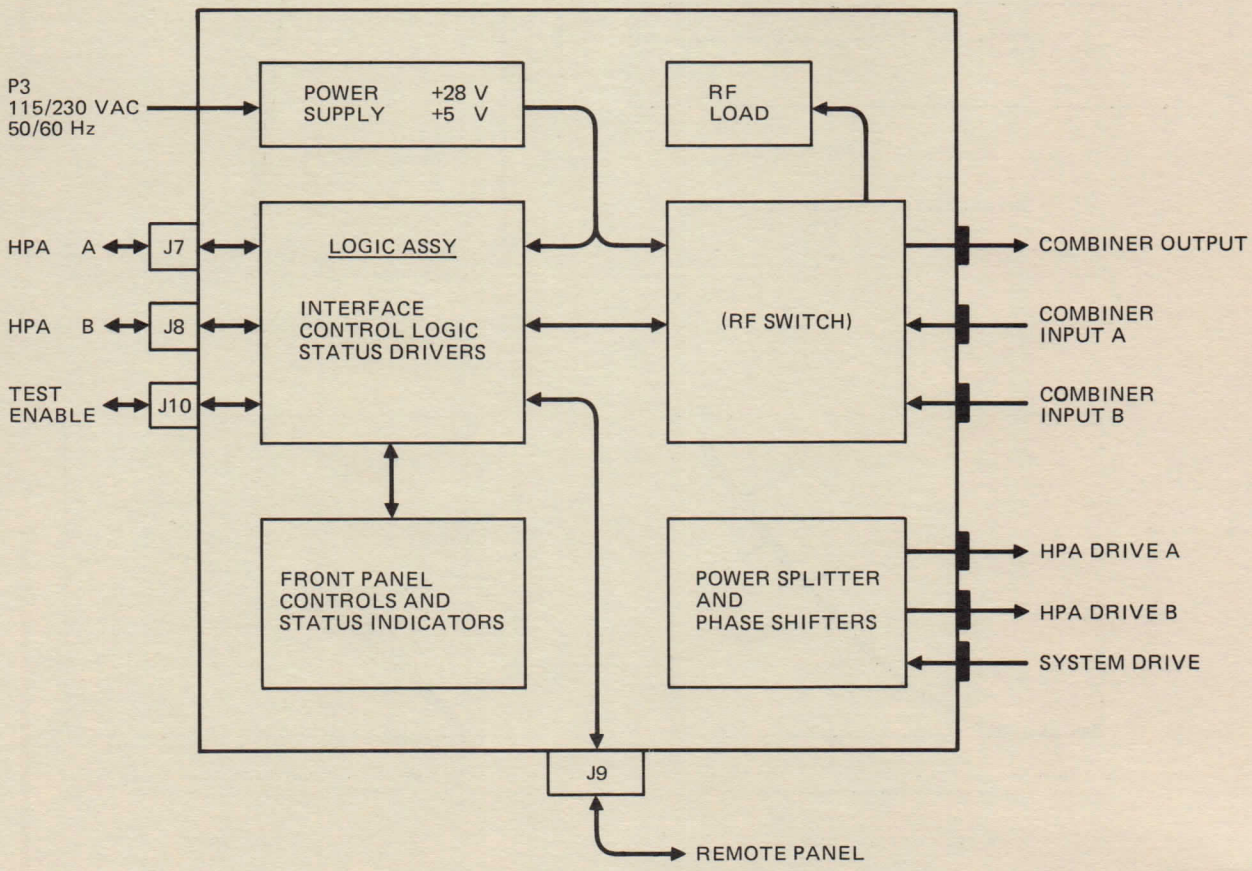

VPC BLOCK DIAGRAM

TYPICAL PERFORMANCE CURVES

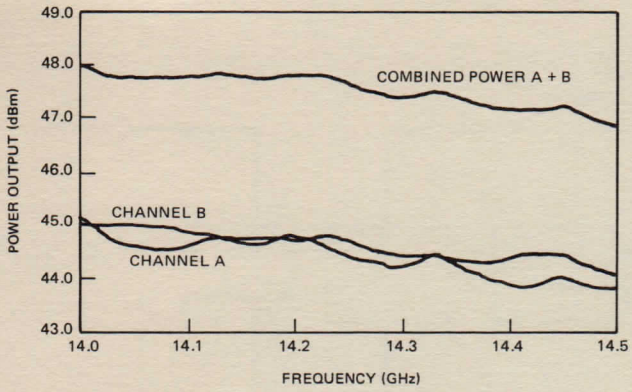

SMALL SIGNAL POWER OUTPUT

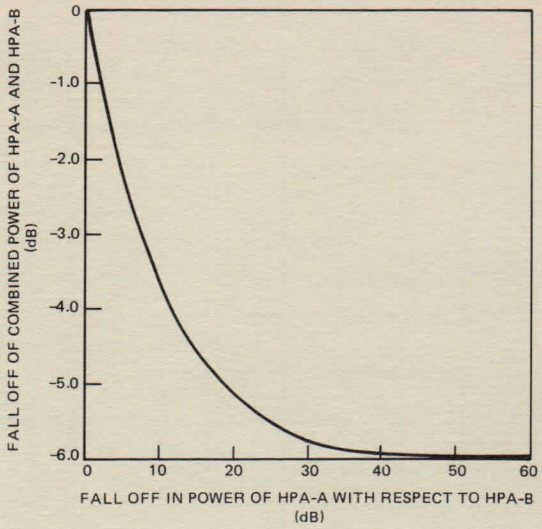

EFFECT OF AMPLITUDE DIFFERENCES ON OUTPUT POWER

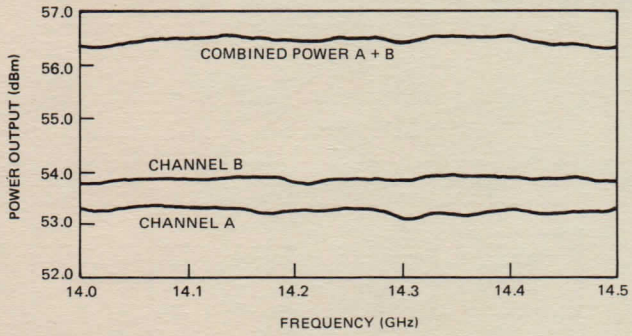

SATURATED POWER OUTPUT

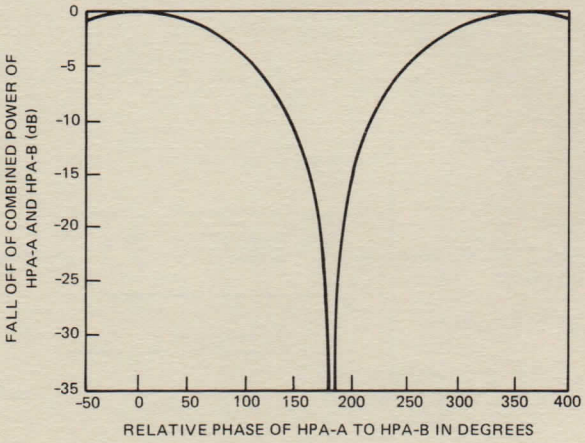

EFFECT OF PHASE DIFFERENCES ON OUTPUT POWER

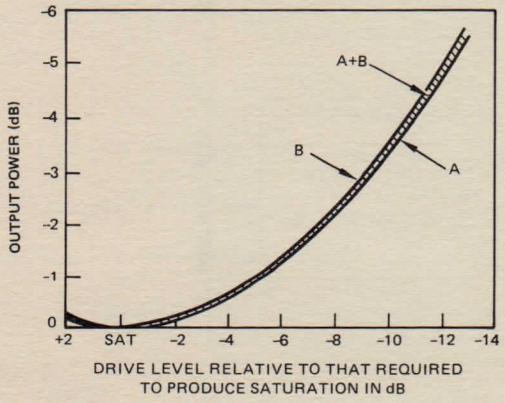

OUTPUT VERSUS INPUT

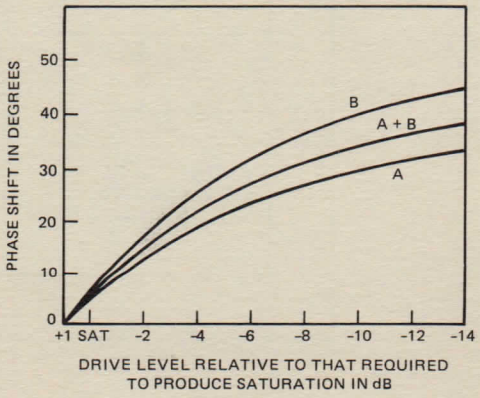

AM/PM CONVERSION

9345HA04 VARIABLE POWER COMBINER ASSEMBLY 14 GHz

HUGHES

HUGHES AIRCRAFT COMPANY

ELECTRON DYNAMICS DIVISION

OUTLINE DRAWINGS

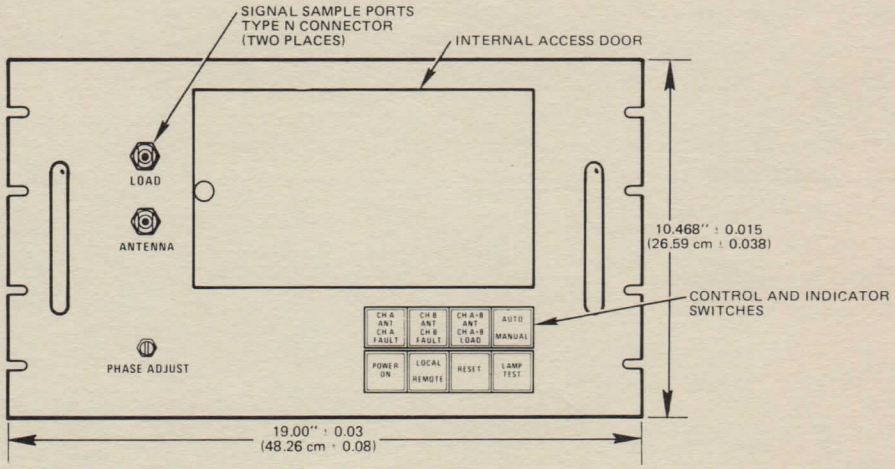

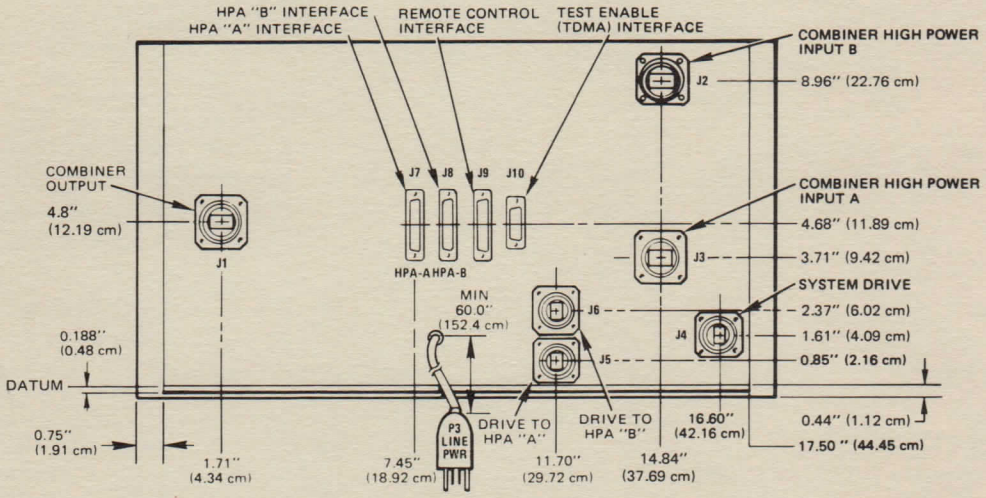

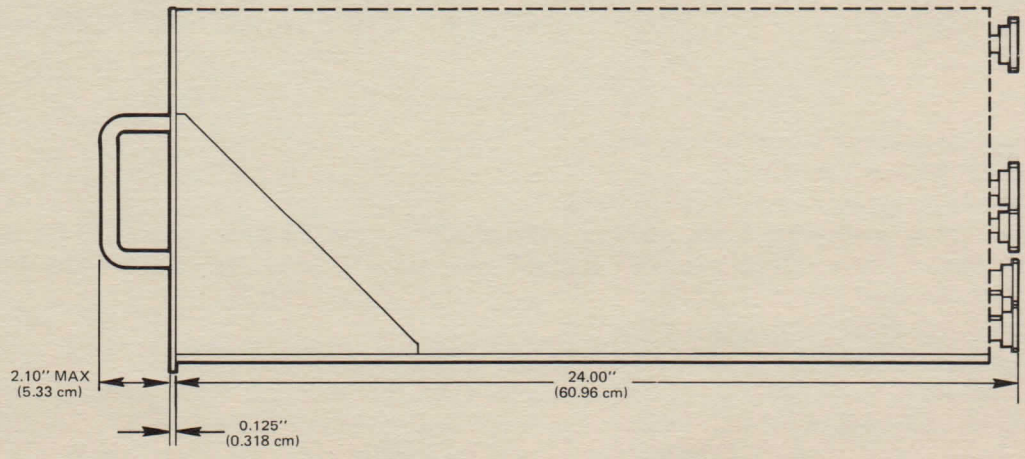

HUGHES
HUGHES AIRCRAFT COMPANY
ELECTRON DYNAMICS DIVISION 3100 West Lomita Boulevard, P.O. Box 2999, Torrance, California 90509, Tel (213) 517-6000

PRINTED IN USA 6/82 AL