Mullard

technical handbook

Book 2

Electronic tubes

Part 2a

Plumbicon camera tubes and accessories

1987

Book 2 Part 2a

Electronic tubes

Plumbicon camera tubes and accessories

MULLARD LTD., MULLARD HOUSE, TORRINGTON PLACE,
LONDON, WC1E 7HD

Telephone 01-580 6633

Telex: 264341

PLUMBICON CAMERA TUBES AND ACCESSORIES

GENERAL SECTION

PRINCIPLES OF OPERATION

1 PHOTOCONDUCTIVE CAMERA TUBES

1.1 General description

A lens system focuses an image of the scene to be televised onto the faceplate of the camera tube. A photoconductive layer on the faceplate converts this image into a charge distribution which is then scanned line-by-line by an electron beam and transformed into an electrical signal.

Figure 1 illustrates the electrode and coil arrangement for a vidicon or Plumbicon tube with magnetic focusing and deflection. An electron gun produces the scanning electron beam, which is directed by the focusing and deflection coils to land upon a target containing the photoconductive layer.

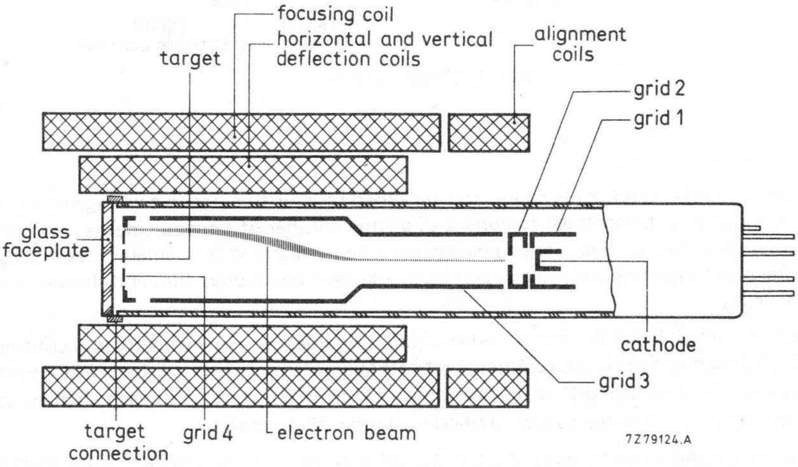

Fig. 1 Electrode and coil arrangement of a vidicon or Plumbicon tube.

The electron gun comprises of an indirectly heated cathode and grids 1 to 4. The voltage on grid 1 controls the electron beam current. Grid 2 (first anode) accelerates the electrons, which subsequently pass through a cylindrical electrode (grid 3) and a fine mesh (grid 4), which establishes a uniform decelerating field in front of the target.

The focusing coil produces an axial magnetic field that, in combination with an appropriate voltage applied to grid 3, focuses the beam on the target. Focusing can be adjusted by varying either the grid 3 voltage or the focusing coil current.

Two sets of alignment coils produce an adjustable transverse magnetic field, enabling the beam to be aligned parallel to the tube axis so that it lands perpendicularly on the target.

Finally, two sets of deflection coils supply the varying magnetic field needed to deflect the beam for line-by-line scan of the target.

The target section is illustrated in Fig. 2. It consists of:

- an optically flat faceplate;
- a transparent conductive film on the inner surface of the faceplate, connected electrically to the external signal electrode contact;
- a thin layer of photoconductive material deposited on the conductive film. In darkness this material has a high specific resistance which decreases with increasing illumination.

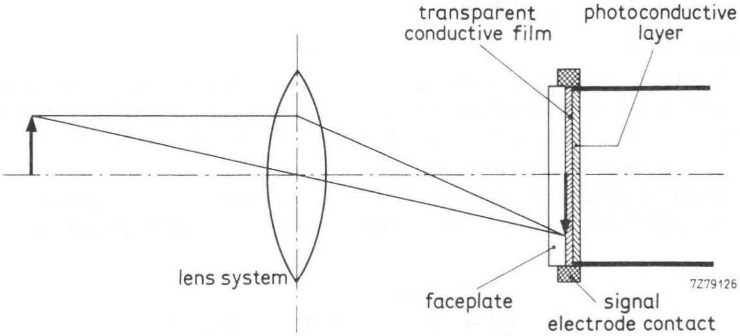

Fig. 2 Target section.

1.2 Operation

The external signal electrode contact is connected via a load resistor to a positive voltage of e.g. 45 V, (see Fig. 3.) The target may be assumed to consist of a large number of target elements corresponding to the number of picture elements. Each target element may be represented by a small capacitor C_e, connected on one side to the signal electrode via the transparent conductive film and shunted by a light dependent resistor R_e.

When the target is scanned, beam electrons approaching the target at a low velocity will continue to land until the scanned surface is approximately at cathode potential. This is called cathode potential stabilization. In this way a voltage difference is established across the layer, with each element capacitor charged to nearly the same potential as that applied to the signal electrode.

In the dark, the photoconductive material is a fairly good insulator, so that only a minute fraction of the charge of the element capacitors will leak away between successive scans. This fraction will be restored by the beam and the resulting current to the signal electrode is called 'dark current'.

When an optical image is focused on the target, those target elements which are illuminated will become conductive and will be partly discharged. As a consequence of this a pattern of positive charges corresponding to the optical image will be produced on the side of the target facing the electron gun.

While scanning this charge pattern, the electron beam will deposit electrons on the positive elements until the latter are restored to their original cathode potential, causing a capacitive current to the signal electrode – and hence a voltage across the load resistor R_l. This voltage is the video signal and is fed to the preamplifier.

A camera tube is called 'stabilized' when the magnitude of the beam current is sufficient to restore the scanned surface to the cathode potential. All element capacitors, including those at the highlights of the image, are then completely recharged by the passing electron beam.

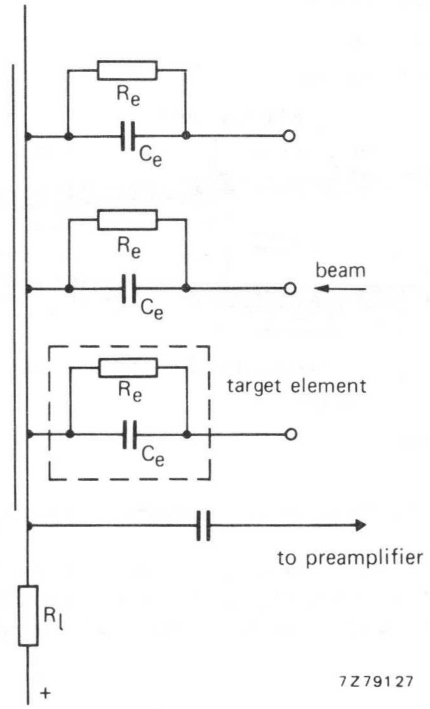

Fig. 3.

1.3 Separate mesh construction

The focusing coils commonly used do not produce an ideal focusing field distribution in the vicinity of the target. The resulting 'landing errors' of the scanning beam (non-perpendicular landing outside the central area) may cause picture defects such as geometrical distortion and 'stern waves' behind moving objects. An electron-optical lens formed between grids 3 and 4 can correct these landing errors. The grids are electrically separated with grid 4 (the mesh) positive relative to grid 3. Lens action is governed by the ratio of voltages on grids 3 and 4, the optimum ratio depending upon factors such as electron gun construction and type of coil assembly used.

Besides eliminating landing errors, separate-mesh construction reduces the space charge in the field-free region near the mesh, and so provides the bonus of improved resolution compared with the integral mesh (in which grids 3 and 4 are internally connected). Moreover, since this space charge increases with increasing beam current, separate mesh tubes can operate with higher beam currents than integral mesh tubes.

All currently available Plumbicon tubes have separate mesh construction. Some vidicon tubes, however, have integral meshes.

1.4 Electrostatic focus

Focusing and deflection may both be electrostatic. Figure 4 shows a possible arrangement of electrodes and coils for a camera tube with electrostatic focusing and magnetic deflection.

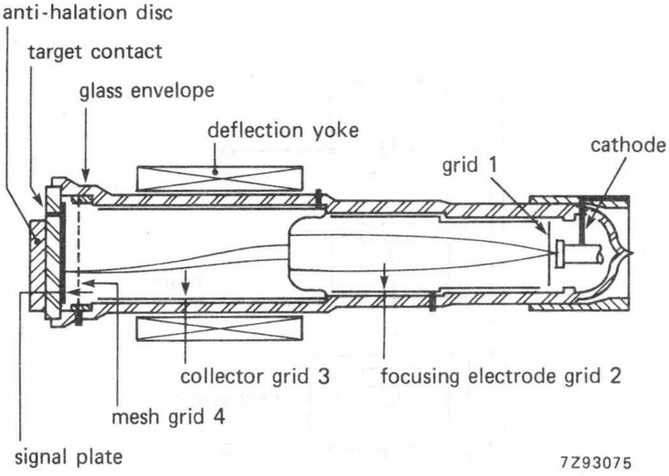

Fig. 4 Schematic electrode and coil arrangement with electrostatic focusing.

In an electrostatically focused tube the electron gun includes an indirectly heated cathode, a control electrode (grid 1), a focusing electrode (grid 2), a cylindrical electrode (grid 3) and a fine mesh (grid 4). Since this tube uses no focusing coils, it dissipates significantly less power than the magnetically focused tube.

1.5 Anti-comet-tail gun

To cope with extreme highlights, which cannot be stabilized with normal beam currents, a special electron gun known as the anti-comet-tail (ACT) gun has been developed. The General Operational Notes on Plumbicon tubes give a short description of this gun.

1.6 The diode gun

In the diode gun grid 1 is made positive relative to the cathode. This modifies the electron beam and provides larger beam reserve for highlight handling. A brief description of the diode gun will be found in the General Operational Notes on Plumbicon tubes.

2 MAIN PROPERTIES

2.1 Luminous sensitivity

The *luminous sensitivity*, S_L, of a camera tube is defined as the *average* signal current, I_s, generated per unit luminous flux falling uniformly on the scanned area, A, of its target; i.e.

$$S_L = \frac{I_s}{AB_{ph}} \quad \mu A/\text{lumen}$$

in which B_{ph} is the illuminance of the photoconductive layer (in lumens/m^2).

Often, what is of interest to the camera designer is not the average signal current, but the current, I_p, over the active scanning line, since this a better indication of the peak signal currents likely to occur in practice. For a camera tube with a blanking period β (given as a percentage of the total line period), the signal current I_p is given by:

$$I_p = \frac{100}{100 - \beta}\, I_s = \alpha\, I_s.$$

For the CCIR system $\alpha = 1{,}3$.

For a black/white camera, the illuminance, B_{ph}, of the photoconductive layer is related to the scene illuminance, B_{SC}, by:

$$B_{ph} = B_{SC}\, \frac{RT}{4F^2\,(m + 1)^2}$$

in which: R is the average scene reflectivity, T the lens transmission factor, F the lens aperture, and m the linear magnification from scene to target.

A similar relationship holds for the red, green and blue channels of a colour camera, but in this case the situation is complicated by the extra components that must be included in the optical system.

2.2 Radiant sensitivity and spectral response

The *radiant sensitivity,* S_r, of a camera tube is the average signal current generated per unit radiant energy falling uniformly on the scanned area of its target. Radiant energy is commonly expressed in mA/W, and at a given wavelength λ it is related to the *luminous* sensitivity, S_L by:

$$S_r\,(\lambda) = 0{,}680\, V\,(\lambda) S_L\,(\lambda)$$

in which V (λ) is the normalized spectral sensitivity of the eye at wavelength λ. Note: V (λ) is an empirical function that has been internationally agreed; its peak value is unity which occurs at a wavelength of 555 nm.

The radiant sensitivity of a camera tube varies with wavelength. The *spectral response* curves given in Fig. 5 show this variation for some typical camera tubes; these curves are merely exemplary, and for spectral response details of specific tubes the relevant data sheet should be consulted.

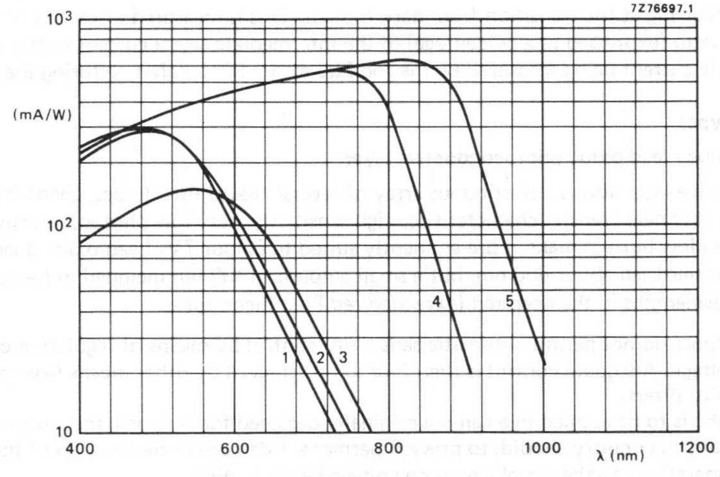

Fig. 5 Spectral response of various camera tubes. (1) Plumbicon tube XQ1073; (2) Sb_2S_3 vidicon XQ1280; (3) Sb_2S_3 vidicon XQ1240; (4) Newvicon tube XQ1274; (5) Newvicon tube XQ1276.

2.3 Resolution

The resolution of a camera tube is commonly expressed in terms of its *modulation depth,* which is defined as the ratio (expressed as a percentage) of the amplitudes of a 5 MHz and a 0,5 MHz square-wave signal as measured on a waveform monitor.

The square-wave signal can be produced by a test pattern comprising vertical black and white bars of equal thickness. The pattern may be specified in terms of the video frequency, or in terms of the corresponding number of TV lines, i.e. the number of bars that will fill a TV picture when arranged horizontally. For the CCIR system (52 μs scan), 5 MHz corresponds to about 530 vertical bars or 400 TV lines, and 0,5 MHz corresponds to about 40 TV lines.

A pattern can also be specified by the number of line-pairs per mm (lp/mm), a line-pair being an adjacent pair of black and white bars. 400 TV lines corresponds to:
- 12,5 lp/mm for a 30 mm tube with enlarged scanning (scanned area 15,6 mm x 20,8 mm);
- 15,6 lp/mm for a 30 mm tube (scanned area 12,8 mm x 17,1 mm);
- 20,8 lp/mm for a 25 mm tube (scanned area 9,6 mm x 12,8 mm);
- 30,3 lp/mm for a 18 mm tube (scanned area 6,6 mm x 8,8 mm);
- 40,6 lp/mm for a 14 mm tube (scanned area 4,8 mm x 6,4 mm).

The modulation depth values given in this handbook include the slight degradation produced by the camera lens. For the purpose of these measurements, a lens aperture of 5,6 is taken.

2.4 Lag

In a camera tube there is always a delay in establishing a new signal current following a rapid change in target illumination. This is the phenomenon of *lag.* Two types of lag occur in a photoconductive camera tube: *photoconductive lag* determined principally by the nature of the target, and *discharge* (or *capacitive*) *lag* attributed to the way in which the electron beam discharges the target.

We define two forms of lag for measurement purposes:

- *decay lag* occurring at the transition from light to dark. This is measured after the target has been illuminated for at least 5 s, and is usually given as the ratio (expressed as a percentage) of the residual signal current to the initial current, the residual current being measured 60 ms and 200 ms (at 50 Hz) after the light is cut off.
- *build-up lag* occurring at the transition from dark to light. This is measured after 10 s of darkness, and is given as the ratio (expressed as a percentage) of the intermediate signal current to the final current, the intermediate current being measured 60 ms and 200 ms (at 50 Hz) after restoring the light.

3 Camera tube types

3.1 Plumbicon tube - lead oxide photoconductive layer

The photoconductive layer forms a continuous array of reverse-biased PIN-diodes, giving it an extremely low dark current. Its linear transfer characteristic, high sensitivity, very low photoconductive lag, excellent resolution and low burn-in make it pre-eminently suited to colour TV. Lead oxide does not respond to wavelengths greater than about 650 nm, but a small amount of sulphur included in the layer extends its response to wavelengths in the deep red (*extended red* Plumbicon tubes).

N.B. Plumbicon tubes do not permit automatic sensitivity control by means of regulation of the signal electrode voltage. Adequate control is therefore to be achieved by other means (iris control and neutral density filters).
When the tube is to be applied in a camera originally designed for vidicons, the automatic sensitivity control circuitry should, to prevent permanent damage or destruction of the target, be made inoperative and the signal electrode voltage be set to 45 V.

3.2 Vidicon tube - antimony trisulphide (Sb_2S_3) photoconductive layer

The sensitivity of an Sb_2S_3 layer depends on the target voltage (the voltage across the layer), so it is possible to control the sensitivity by varying this voltage. The dark current is strongly dependent upon target voltage as well as upon temperature.

The Sb_2S_3 layer suffers from photoconductive lag and is prone to burn-in. The layer also has a non-linear transfer characteristic and so is less suited to colour TV. However, since the layer is thin its resolution is high.

Standard vidicons are relatively inexpensive to manufacture, so despite their drawbacks they are used extensively in less critical applications. Variants of the standard vidicon have been developed for use in medical X-ray equipment where they are coupled to an X-ray image intensifier.

3.3 Newvicon tube - heterojunction photoconductive layer

The photoconductive layer contains sublayers of zinc selenide (ZnSe) and of a zinc telluride (ZnTe) cadmium telluride (CdTe) mixture. In operation the layer is reverse-biased. The layer produces a non-negligible dark current that is temperature dependent.

The Newvicon tube has very high sensitivity which extends into the near infrared. It is not possible to adjust this sensitivity by varying the target voltage. The tube has a linear transfer characteristic and low burn-in. Its photoconductive layer is thin, so it has high lag and and high resolution.

4 Equipment design and operating conditions

4.1 Signal electrode connection

The signal electrode connection should be made by a spring contact that bears against the target connection. The spring contact may be part of the coil assembly.

4.2 Deflection circuitry

The signal current is a function of target illumination and of scanning speed. The deflection circuitry must therefore provide constant scanning speed to ensure that the variation in signal current is a true representation of the intensity profile across the target.

4.3 Electrostatic shielding

To avoid interference in the picture the signal electrode must be electrostatically shielded, e.g. by one grounded shield inside the focusing coil at the faceplate end, and one inside the deflection yoke.

4.4 Polarity of focusing coil

The polarity of the focusing coil should be such that the target end will attract (for 30 mm tubes, repel) a north seeking pole.

4.5 Full size scanning

The full scanning area should always be covered during scan; underscanning of the photoconductive layer or failure to scan, even for a short time, can cause permanent damage.

To prevent the electron beam landing on the target during vertical and horizontal flyback (which would remove some picture information from the target), a blanking pulse must be applied - either a negative pulse to the control grid or a positive pulse to the cathode.

In tubes with a separate mesh construction corner resolution can be improved by applying suitable pulses to grid 3 (*dynamic focusing* or *focus modulation*).

The resolution of most types of photoconductive camera tube increases with increasing voltage on grids 3 and 4. High voltage operation, however, requires increased power for the deflection and focusing coils.

RECOMMENDATIONS

- When the tube is used in a series heater chain, the heater voltage must not exceed 9,5 V (r.m.s.) when the supply is switched on. Preferably, each heater should be shunted by a zener diode.
- If cathode-current stabilization is used to stabilize beam current, the cathode heater should be arranged to operate for at least 1 minute before any beam current is drawn.

CAUTION

Camera tubes with photoconductive layers contain toxic compounds. Dispose of them with care. If a tube is broken, take suitable precautions in collecting and disposing of fragments. Avoid direct contact or inhalation of particles.

RATING SYSTEM

(in accordance with IEC Publication 134)

ABSOLUTE MAXIMUM RATING SYSTEM

Absolute maximum ratings are limiting values of operating and environmental conditions applicable to any electronic device of a specified type as defined by its published data, which should not be exceeded under the worst probable conditions.

These values are chosen by the device manufacturer to provide acceptable serviceability of the device, taking no responsibility for equipment variations, environmental variations, and the effects of changes in operating conditions due to variations in the characteristics of the device under consideration and of all other electronic devices in the equipment.

The equipment manufacturer should design so that, initially and throughout life, no absolute maximum value for the intended service is exceeded with any device under the worst probable operating conditions with respect to supply variation, equipment component variation, equipment control adjustment, load variations, signal variation, environmental conditions, and variations in characteristics of the device under consideration and of all other electronic devices in the equipment.

Dimensional drawings are in mm unless otherwise indicated.

SELECTION GUIDE OF PLUMBICON ® TUBES

Abbreviations used in the tables:

- **Photoconductive layer**

SR = standard resolution — cut-off ≈ 650 nm
HR = high resolution — cut-off ≈ 650 nm
ER = with extended red response, high resolution — cut-off ≈ 900 nm
ER(F) = with extended red response, high resolution and IR reflecting filter on anti-halation glass disc — cut-off ≈ 750 nm

- **Quality grade**

Br = broadcast
Ind = industrial
Med = medical

Industrial grade (IG) versions of all tube types with broadcast quality are also available. IG types are electrically and mechanically identical to the broadcast quality types, the only difference being the degree of freedom from blemishes on the photoconductive target.
The type number of IG tubes is established by using the first three digits of the corresponding broadcast quality type, followed by a digit which is one higher than that of the broadcast type, e.g.:

broadcast type XQ1427, IG type: XQ1428
XQ1505 XQ1506
XQ1523 XQ1524

- **Applications**

B/W = for black and white cameras
L = for luminance channel
R = for red chrominance channel
G = for green chrominance channel
B = for blue chrominance channel
Med = medical; coupled to X-ray image intensifier
Sc = scientific, surveillance; coupled e.g. to image intensifier

- **Notes** (see tables on following pages)

1. Without anti-halation glass disc.
2. With infrared reflecting filter on anti-halation glass disc.
3. Without anti-halation glass disc: add suffix/01 to type number.
4. Add suffix/02 for rear loading type, with provisions for adjustable light bias.
5. Add suffix/03 for front loading type, with provisions for adjustable light bias.
6. Add suffix/05 for rear loading type, without provisions for adjustable light bias.

® Registered Trade Mark for television camera tube.

PLUMBICON TUBES - 30 mm (1¼ inch)

type		photo-conductive layer	quality grade Br	Ind	Med	applications B/W	L	R	G	B	Med	notes
Maintenance types	190 mA; 6,3 V											
XQ1022		SR			●						●	1
Design types	190 mA; 6,3 V	○ provision for both fixed and adjustable light bias ○ high resolution										
XQ1410		HR	●			●	●	●	●	●		
XQ1413		ER	●					●				
XQ1415		ER(F)	●			●	●	●				2
Design types	190 mA; 6,3 V	○ anti-comet-tail electron gun (ACT) ○ provision for both fixed and adjustable light bias ○ high resolution										
XQ1520		HR	●			●	●	●	●	●		
XQ1523		ER	●					●				
XQ1525		ER(F)	●				●	●				2
New types	190 mA; 6,3 V	○ high resolution; "diode" electron gun (DBC) ○ provision for both fixed and adjustable light bias										
XQ3440		HR	●			●	●	●	●	●		
XQ3443		ER	●					●				
XQ3445		ER(F)	●					●				2
Design type	190 mA; 6,3 V	○ high resolution; "diode" electron gun (DBC) ○ enlarged scanning area										
XQ4502		ER			●						●	

PLUMBICON TUBES - 25,4 mm (1 inch)

Maintenance types 95 mA
6,3 V
○ front and rear loading types, with or without provision for adjustable light bias

type	photo-conductive layer	quality grade			applications						notes
		Br	Ind	Med	B/W	L	R	G	B	Med	
XQ1070	SR	●			●	●	●	●	●		3, 4, 5
XQ1071	SR		●		●		●	●	●		3, 4, 5
XQ1072	SR			●						●	1
XQ1073	ER	●					●			●	3, 4, 5
XQ1074	ER		●				●				3, 4, 5
XQ1075	ER(F)	●			●		●				2, 4, 5
XQ1076	ER(F)		●		●		●				2, 4, 5

Design types 190 mA;
6,3 V
○ high resolution, anti-comet-tail electron gun
○ provision for adjustable light bias

XQ1500 XQ1510	HR	●			●	●	●	●	●		
XQ1503 XQ1513	ER	●					●				
XQ1505 XQ1515	ER(F)	●					●				2

Maintenance types 95 mA;
6,3 V
○ high resolution, "diode" electron gun (DBC)
○ provision for adjustable light bias

XQ2070	HR	●			●	●	●	●	●		4, 5, 6
XQ2073	ER	●					●			●	4, 5, 6
XQ2075	ER(F)	●					●				2, 4, 5, 6

Design type 190 mA;
6,3 V
○ high resolution, "diode" electron gun (DBC)
○ provision for adjustable light bias

XQ2172				●						●	4, 5

Design types 95 mA;
6,3 V
○ high resolution, "diode" gun (DBC)
○ provision for adjustable light bias
○ low output capacitance (LOC)

XQ3070	HR	●			●	●	●	●	●		4, 6
XQ3073	ER	●					●				4, 6
XQ3075	ER(F)	●					●				2, 4, 6

PLUMBICON TUBES - 18 mm (2/3 inch)

Design types 95 mA; 6,3 V

type	photoconductive layer	quality grade			applications				
		Br	Ind	Med	B/W	L	R	G	B
XQ1427	ER	●			●		●	●	
	SR	●			●			●	●
XQ1428	ER		●		●		●	●	
	SR		●		●			●	●

Maintenance types 95 mA; 6,3 V
○ high resolution, "diode" electrode gun (DBC)

XQ2427	ER	●			●		●	●	
	HR	●			●			●	●
XQ2428	ER		●		●		●	●	
	HR		●		●			●	●

Design types 95 mA; 6,3 V
○ high resolution, "diode" electrode gun (DBC)
○ low output capacitance (LOC)

XQ3427	ER	●			●		●	●	
	HR	●			●			●	●
XQ3428	ER		●		●		●	●	
	HR		●		●			●	●

Design type 95 mA; 6,3 V
○ high resolution, "diode" electron gun (DBC)
○ low output capacitance (LOC)
○ magnetic focusing, electrostatic deflection (MS)

XQ3457	ER	●					●		
	HR	●			●			●	●

Design type 95 mA; 6,3 V
○ electrostatic focusing

XQ3467	SR	●			●			●	●
	ER	●			●		●	●	

New type 53 mA; 8,7 V
○ high resolution, "HS diode" electron gun (DBC)
○ low output capacitance (LOC)
○ electrostatic focusing

XQ4187	HR	●			●			●	●
	ER	●					●		

PLUMBICON TUBES - 14 mm (½ inch)

Design types	55 mA; 9 V	○ high resolution, ''HS diode'' electron gun (DBC) ○ low output capacitance (LOC) ○ electrostatic focusing

type	photo-conductive layer	quality grade			applications				
		Br	Ind	Med	B/W	L	R	G	B
XQ4087	HR	●						●	●
	ER	●					●	●	

Accessories for Plumbicon tubes

	30 mm (1¼'') dia. all magnetic			30 mm (1¼'') dia. enlarged scan all magnetic	25 mm (1'') dia. all magnetic					
	light bias	ACT and light bias	DBC LOC light bias	DBC LOC	/02 versions light bias	/03 versions light bias	ACT and light bias	ACT and light bias	DBC light bias LOC	DBC and light bias
	rear loading			front loading	rear loading	front loading	rear loading	front loading	rear loading	front loading
example	XQ1410	XQ1520	XQ3440	XQ4502	XQ1070/02	XQ1070/03	XQ1500	XQ1510	XQ3070/02	XQ2070/03
coil unit B/W	AT1130S			AT1107	AT1116S (front loading) AT1126/..S (rear loading)					
coil unit colour	AT1130/..*				AT1116/..* (front loading) AT1126/..* (rear loading)					
socket	56021 56025	56025	56021 56025	56021	56098		56026		56098	
light bias lamp	56106				56106		56027		56106	
adapters** R G B	56126▲ 56139▲▲	56123 56124 56125								
mask		56029			56028					

* Computer selected triplet, various versions.

** Adapters for fixed light bias for XQ1410 series and XQ1520.

▲ Adapter for adjustable light bias for XQ1410 series for use in Marconi Mark VIII camera (variant).

▲▲ Adapter for fixed light bias for XQ1410 series for use in RCA TK47 camera.

Accessories for Plumbicon tubes (continued)

	18 mm (2/3") dia. all magnetic		18 mm (2/3") dia. MS	18 mm (2/3") dia. electrostatic focusing		14 mm (½") dia. electrostatic focusing	
	DBC	DBC LOC	DBC LOC		HS DBC LOC	HS DBC LOC	
	rear loading		front loading	front loading		front loading	
example	XQ2427	XQ3427	XQ3457	XQ3467	XQ4187	XQ4087	
coil unit B/W	AT1109/01S		KV4722	KV4780	KV4736AS	AT1120S	
coil unit colour	AT1109/..*	AT1109/..*	3 x KV4722	3 x KV4780	KV4736AT*	AT1120T	
socket	56049		56601	56604	–	–	
light bias lamp	–	–	–	–	–	–	
mask	56033	56030	–	56033	56030	–	

* Computer selected triplet, various versions.

GENERAL OPERATIONAL NOTES

1 Properties of the lead oxide photoconductive layer

The Plumbicon tube has a lead oxide photoconductive layer. In tubes with extended red response a small amount of sulphur is added to the lead oxide.

1.1 Sensitivity

Since the Plumbicon tube has a linear light transfer characteristic, its sensitivity can be specified completely by the number of μA/lumen delivered to the signal electrode. A typical value for a standard layer (without extended red response) in tungsten light with a colour temperature of 2856 K would be 400 μA/lumen (d.c. value).

Sensitivity increases with target voltage, but at the recommended voltage (45 V) it is almost at maximum and rises only slightly with further voltage increases.

For a given target illumination, the signal current is a function of the scanned area; but it can be shown that in the Plumbicon tube with its linear light transfer characteristic, camera sensitivity is independent of tube size for the same depth of field and viewing angle.

1.2 Spectral response

Figure 1 shows typical spectral response curves of some 30 mm Plumbicon tubes. Curve 1 relates to the high resolution layer used, for example, in the XQ1410; curve 2 relates to the extended-red layer as used in the XQ1413.

Because the sensitivity of the XQ1413 is high in the deep red region, an infrared reflecting filter should be used for proper colour rendition. The XQ1415, whose spectral response is given by curve 3, already has such a filter provided with the anti-halation disc cemented to its faceplate (see 1.5 below).

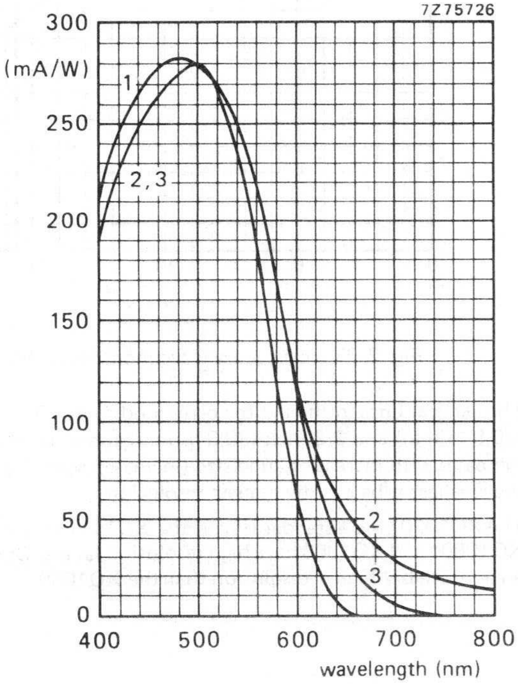

Fig. 1 Typical spectral response curves of 30 mm Plumbicon tubes.

1-inch Plumbicon tubes with extended red sensitivity, such as the XQ1073 and the XQ1503, have somewhat lower red and deep red sensitivities due to a smaller amount of sulphur in the photoconductive layer. For correction of the colour response therefore less filtering is needed. The Plumbicon tube types XQ1075 and XQ1505 are provided with the appropriate infrared reflecting filter.

1. 3 Resolution

The resolution of the extended-red layer is higher than that of the standard layer, which is used, for example, in the XQ1020*. A high resolution layer without extended-red response has been developed, which closely approaches the resolution of the extended-red layer.

Figure 2 shows typical modulation transfer characteristics of some Plumbicon tubes, measured in green light, as a function of the number of line pairs per mm.

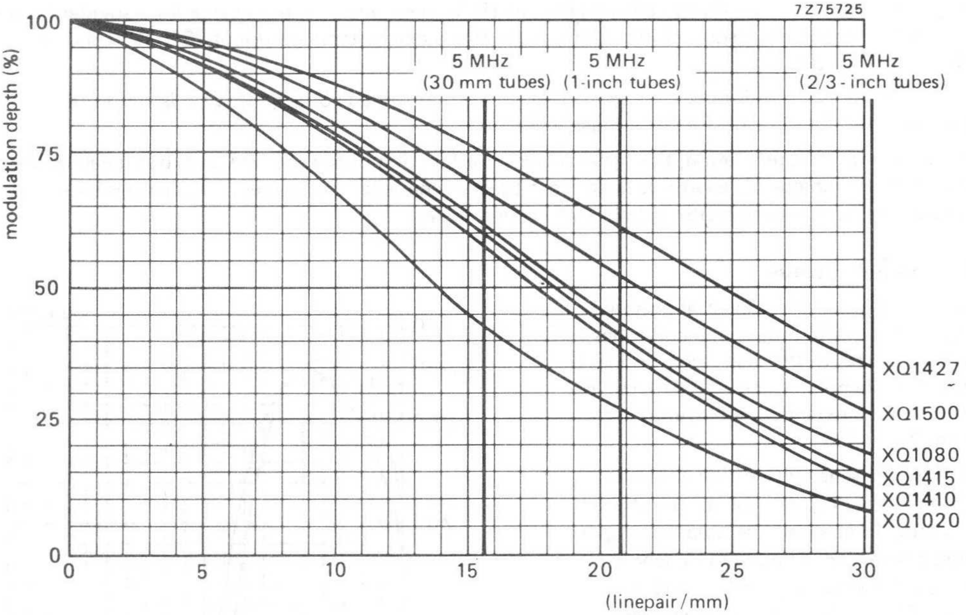

Fig. 2 Typical square-wave modulation transfer curves of some Plumbicon tubes*.

The vertical lines in the figure correspond to 400 TV lines for 30 mm (15,6 lp/mm), 1-inch (20,8 lp/mm) and 2/3-inch (30,3 lp/mm) tubes. It can be seen that at 400 TV lines (5 MHz) resolution increases with increasing tube size (increased scanning area). For a given number of line pairs per mm the smallest tube has the highest resolution.

The XQ1020* has a standard layer, the XQ1415 and the XQ1427 have extended-red layers the XQ1410, XQ1080* and XQ1500 have high resolution layers. Due to a special gun construction the XQ1500 has an appreciably higher resolution than the XQ1080.

---

* The XQ1020 series has been superseded by the XQ1410 series and the XQ1080 series by the XQ1500 series.

1.4 Lag

The photoconductive lag of the lead oxide layer is practically negligible. Due to the fact that the photoconductive layer in the tubes is relatively thick (10 to 18 μm, depending on tube type), Plumbicon tubes show very little discharge lag at normal signal currents.

Discharge lag becomes evident under low key conditions, when signal currents are small. This type of lag depends on layer capacitance and beam resistance. The effective beam resistance is decreased by applying light bias and thereby the discharge lag is reduced. Figure 3 shows an example of the effect of light bias on discharge lag (30 mm Plumbicon tube type XQ1410, signal current of 40 nA, green light, beam setting 600 nA).

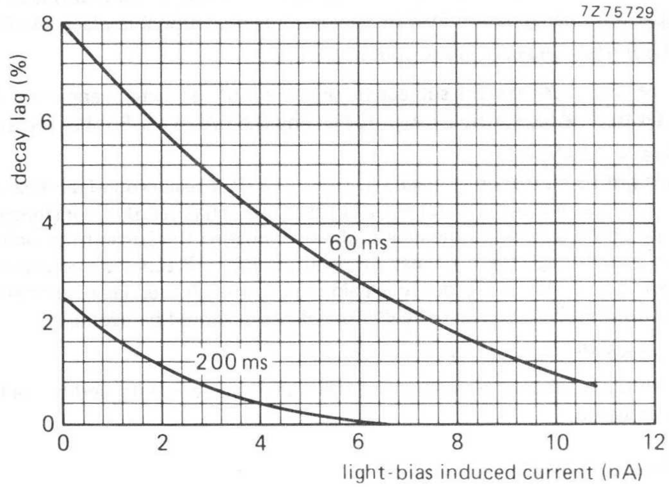

Fig. 3 Typical influence of light bias on decay lag in XQ1410.

In some types of Plumbicon tubes means are available for applying light bias on the gun side of the photoconductive layer (internal light bias). Figure 4 shows how this is achieved in the 30 mm Plumbicon tube XQ1410.

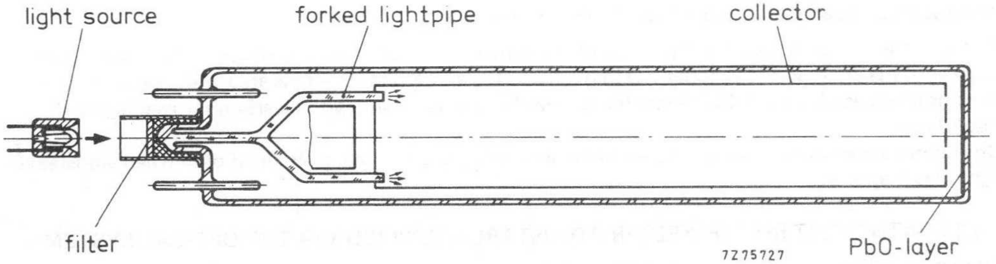

Fig. 4 Light bias in the XQ1410.

Light from a small lamp falls on the pumping stem of the tube and is conveyed by a forked glass light pipe into the collector space. It then falls directly or via reflection against the collector wall on the target. The light source (fixed or adjustable) fits in a metal sleeve fixed on the pumping stem.

1.4.1 Considerations

1.4.1.1 WITH ADJUSTABLE LIGHT BIAS (VIA PUMPING STEM)

For this purpose a light bias lamp, type 56106, is available.

Amount of light bias

Black and white cameras

The amount of light bias required in a black/white camera is not critical (see published data) and may be 3 to 5 nA(p) the upper limit being determined by the onset of objectionable black shading.

Colour cameras without black shading compensation circuitry

Depending on the type of camera and the subjective judgement of the camera engineer, the light bias should generally be set to 3 nA(p) for R, 2 nA(p) for G, and 3,5 nA(p) for B tubes respectively.

A suggested procedure is as follows:
The camera is focused onto a metronome, placed in front of a dark background, and carrying a small white square, which produces a peak output current in the green channel of, for instance, 30 nA. About 2 nA(p) of light bias is applied to the green tube by adjusting the current through its lamp. Subsequently the currents through the light bias lamps of the R and B tubes are adjusted for the best compromise with respect to build-up and decay lag aiming at non-coloured lag phenomena as observed on a colour monitor. Infrared light with a wavelength > 600 nm should be avoided.

Colour cameras with black shading compensation circuitry

In colour cameras with black shading compensation still higher bias currents, and hence better lag performance, can be achieved.

1.4.1.2 WITH FIXED LIGHT BIAS

Also available for 30 mm tubes is an adapter for fixed light bias operation. The adapter carries a colour code in accordance with the application for which the tube is intended. The adapter is slipped over the pins of the tube before putting on the socket (see drawing) and connects a light bias lamp via a series resistor to the heater pins.
The light bias induced dark currents (at 6,30 ± 0,05 V) will be approximately:
4,5 nA(p) for B/W tubes
3 nA(p) for R tubes
2 nA(p) for G, L tubes
3,5 nA(p) for B tubes
whereas an extra 95 mA (approx.) will be drawn from the heater supply.

Provided the heater voltage supply is capable of delivering a well stabilized voltage when these extra lamp currents are drawn, the tubes XQ1410, XQ1413, and XQ1415 – operated with the adapter – can be considered as plug-in replacements for standard tubes, however, with clearly improved lag (and resolution).
Optimum performance with repsect to non-coloured lag phenomena is obtained only when adjustable light bias is applied.

1.4.1.3 WITH LIGHT BIAS (FIXED OR ADJUSTABLE) APPLIED VIA THE OPTICAL SYSTEM

Though excellent performance with respect to speed of response can be obtained it appears to be difficult to produce sufficient uniformity of the light bias induced dark currents and, in a colour camera, to adjust the light bias per tube for neutral i.e. non-coloured lag phenomena, when televising moving objects.

1.4.1.4 WITHOUT LIGHT BIAS

Acceptable performance with respect to speed of response will only be achieved with adequate scene illumination.
The envelopes of the tubes are blackened underneath the plastic base to prevent direct transfer from light bias – if this is applied to the pumping stem – through the envelope to the target, which would cause objectionable peak white shading (often referred to as 'ears') on the black level in the picture corners. This blackening, however, also absorbs the light emitted by the heater of the cathode, light which in tubes like XQ1410 induces some artificial dark current. This absence of heater light causes a slightly increased beam discharge lag in tubes XQ1410, XQ1413, and XQ1415.

REMARK

The life expectancy of the lamps used in 56106 and the adapter is, as stated by the manufacturer, $> 2 \times 10^4$ h at full rating, i.e. 5,5 V, 110 mA, and they will therefore generally outlive the camera tubes. Spares and replacements can be supplied.

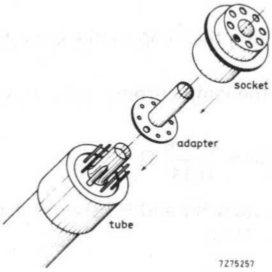

Fig. 5.

adapter for R	tubes	56123	9390 270 10XX00
G, L	tubes	56124	9390 270 20XX00
B	tubes	56125	9390 270 30XX00

1.4.1.5 INSTRUCTIONS FOR USE OF LIGHT BIAS LAMP TYPE 56106

Light bias lamp type 56106 is intended for use with those Plumbicon tubes that have a thin metal tube (provided with a filter) cemented to the pumping stem, e.g. XQ1410 series.

INSTALLING THE LAMP

Using the XQ1410 series as an example, the following installation procedure is recommended (Fig. 5).

1. Insert tube A into the deflection/focusing assembly.
2. Push lamp B firmly into the metal tube on the pumping stem.
3. Mate socket C with the base pins of the tube, allowing the lamp wires to pass through the pumping stem clearance hole in the socket.

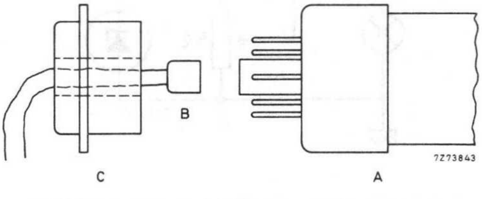

Fig. 6 Installing the light bias lamp.

SUPPLYING THE LAMP

Black/white cameras

Extreme stability is generally not needed. Lamp current can be supplied from a.c. or d.c. sources. Figure 7 shows suggested circuits.

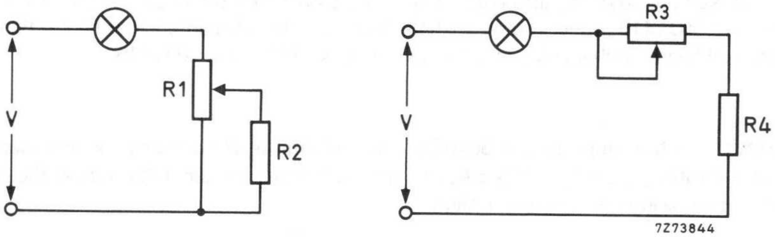

Fig. 7 Supplying the lamp in black/white cameras.

The values of R2 and R4 should limit the lamp current to its maximum value of 110 mA at 5 V. Thus:

$$\frac{R1\ R2}{R1 + R2} = \frac{V - 5}{0{,}11}\ \Omega, \text{ and } \quad R4 = \frac{V - 5}{0{,}11}\ \Omega.$$

When fully in series with the lamp, resistors R1 and R3 should decrease the lamp current to a value which causes negligible bias light, e.g. 50 mA. Thus:

$$R1_{min} = \frac{V}{0{,}05}\ \Omega, \text{ and } R3_{min} = \frac{V}{0{,}05} - R4\ \Omega.$$

Colour cameras

A stabilized d.c. supply is preferred. In cameras with automatic black level compensation, the circuits shown in Fig. 7 may be used. For long-term stability in cameras not having black level compensation, it should be noted that the bias current, set at about 10 nA, changes by 0,5 nA when the voltage across the lamp changes by about 50 mV, and also when the current through the lamp changes by about 0,6 mA.

Figure 8 shows a recommended circuit. The maximum voltage on the base of the transistor should be about 5,5 V.

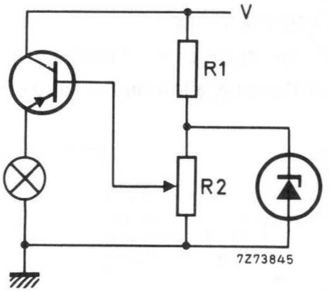

Fig. 8 Supplying the lamp in colour cameras.

1.5 Stray light

The reflectance of the target is not negligible. It is at its highest in the red part of the spectral range. Diffusely reflected light can be caught in the faceplate of the tube and cause stray light, 'halation'. To reduce this, an anti-halation glass disc is cemented on the faceplate, see Fig. 9.

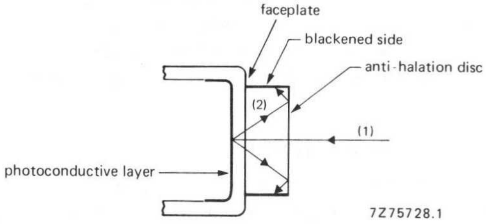

Fig. 9 Anti-halation disc on faceplate.

Further reduction of stray light can be obtained by fitting a mask on the anti-halation disc with an aperture slightly larger than the used scanning area.

1.6 The anti-comet-tail gun

The transfer characteristic of a Plumbicon tube is linear up to a point determined by the available beam current. This restricts its dynamic range. Local highlight levels on the target may cause blooming due to beam-bending and, in extreme cases, loss of stabilization. As it takes a number of scannings to re-establish stabilization when an extreme highlight has moved away, 'comet tails' can occur behind a moving object.

The anti-comet-tail (ACT) gun was developed to reduce these effects. In a tube with such a gun the beam current is strongly increased during line flyback, and most of the re-charging of the target element capacitors in the areas of extreme highlight occurs in the flyback period. Figure 10 shows the principle of an ACT gun.

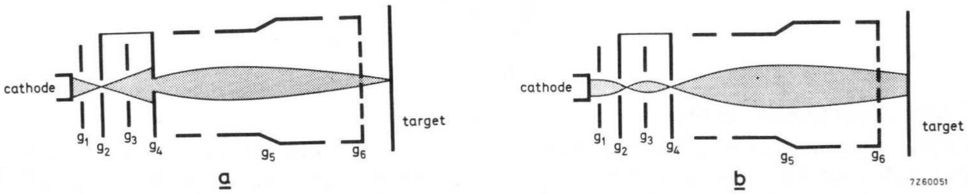

Fig. 10 Anti-comet-tail (ACT) gun; a = read-out mode; b = flyback mode.

The first anode - see Fig. 10 - has been split into two parts, the anode g_2 and the limiter g_4, which are electrically connected. An additional electrode g_3 has been placed between these parts. During the normal read-out scan this extra grid is maintained at a potential close to that of g_2 and g_4. The scanning beam will then be in focus at the target, as shown in Fig. 10a.

During line flyback a negative-going pulse is applied to g_3 to focus the scanning beam on the aperture in the limiter g_4, as shown in Fig. 10b. At the same time the beam current is strongly increased by a positive-going pulse on g_1. Thirdly, a positive-going pulse is applied to the cathode so that it is at a positive potential (e.g. + 8 V) during flyback.

In this way a defocused beam carrying a large current (e.g. $\approx$ 100 μA) scans the surface of the photoconductive layer during line flyback. This beam contains sufficient current to recharge the areas of extreme highlights; it brings the surface here to cathode potential during flyback. Potential levels below this contain picture information and are not influenced. Consequently, during normal read-out, the scanning beam does not encounter target potentials higher than the cathode potential during flyback. Therefore stabilization is possible everywhere and blooming and comet-tails are strongly reduced.

1.7 The diode gun and Dynamic Beam Control (DBC)

In the conventional triode gun, grid 1 and the anode converge the electrons emitted by the cathode to produce a crossover in the electron beam. Electron interaction in the beam, particularly in the vicinity of the crossover, increases the differential beam resistance and so increases beam-discharge lag. In the *diode gun* grid 1 is made positive relative to the cathode. This reduces beam convergence and so eliminates the crossover. The result is reduced differential beam resistance and a larger beam reserve. The consequent reduction in lag permits the use of thinner photoconductive layers to improve resolution (particularly in smaller tubes used in portable cameras for outside broadcasts etc.).

Moreover, with the larger beam reserve of the diode gun tube, excessive highlights can be handled using *Dynamic Beam Control* (DBC). Figure 11 shows the principle of DBC. When the beam encounters a highlight, the sharp rise in signal current is detected by a feedback network which then increases the control grid voltage (V_{g1}), so raising the beam current to read out the highlight.

N.B. Avoid continuous operation at high beam currents since this will shorten tube life.

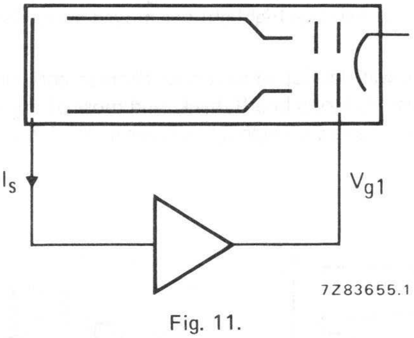

Fig. 11.

1.8 Low output-capacitance tubes

An important factor governing the performance of a TV camera is its signal-to-noise (S/N) ratio; the higher the S/N ratio the better the operational sensitivity of the camera. One way of increasing the S/N ratio is by reducing the total output capacitance of the tube/yoke assemblies within the camera.

In the range of low output-capacitance (LOC) Plumbicon tubes the capacitance of the tube in the deflection yoke is reduced by reducing the size on the transparent conductive film in the target.

1.9 Burn-in or picture sticking

The target of a Plumbicon tube has a high resistance to picture sticking but some sticking may occur at target voltages lower than specified.

1.10 Temperature effects

Plumbicon tubes tolerate short excursions of temperature up to 70 °C. Prolonged use at temperatures above 50 °C will, however, adversely influence tube life. It is therefore advisable to ensure that the faceplate temperature of a Plumbicon tube in a television camera does not exceed 50 °C under normal ambient temperature conditions.

2 RECOMMENDATIONS

2. 1 During transport, handling and storage the axis of the Plumbicon tube must be either vertical, with faceplate up, or horizontal. The faceplate should be covered with the hood provided.

2. 2 To avoid damage to the base pins, the Plumbicon tube should be inserted into its socket with care. Shocks, excessive force and bending loads on the pins are to be avoided.

2. 3 During prolonged idle periods - days or weeks - gas pressure may slowly build up in the tube due to residual gas molecules emerging from the electrodes and the glass wall. There is then a slight risk that the pressure is sufficiently high to cause cathode damage by ion bombardment if cathode current is drawn immediately after switching on the camera.

A cathode heating time of at least a minute before drawing cathode current is therefore recommended. After very long idle periods - e.g. months - it is advisable to extend this pre-heating time to 30 minutes.

2. 4 In isolated cases the properties of a Plumbicon tube may deteriorate slightly when it is kept idle for long periods such as may occur:

- between the factory's pre-shipment test and the actual delivery to the customer;
- between receipt of the tube and its installation;
- when the camera is not used for a long time.

Although the chances of such a deterioration are remote it is advisable to operate the tube for some hours at intervals not more than 4 weeks apart.

The following procedure and conditions are recommended then:

- Set grid g_1, bias control, to maximum negative bias (beam cut-off).
- Allow a heating-up time of the cathode of at least 1 minute before turning up the grid g_1 control to produce a beam.
- Set scanning amplitudes to overscan condition.
- Apply an even illumination to the target to obtain a signal of approximately 0,15 μA and adjust the beam current for correct stabilization.

2. 5 During long-term storage the ambient temperature should not exceed 30 °C.

2. 6 The light transfer characteristic of the Plumbicon tube has a gamma near unity. It may be desirable to incorporate a gamma correcting circuit in the video amplifier system with an adjustable gamma of 0,5 to 1.

2. 7 Plumbicon tubes do not permit automatic sensitivity control by means of regulation of the signal electrode voltage. Adequate control is therefore to be achieved by other means (iris control and neutral density filters).

2. 8 The beam current of a Plumbicon tube without an ACT gun is usually set at twice the value required for stabilization of normal peak white. Highlight handling is improved by using higher beam currents. Very high beam currents, however, cause increased lag, some loss of resolution, geometry shifts and reduction of tube life.

2.9 Alignment currents are used to correct for slight mechanical and electrical misalignments encountered in tubes and coil assemblies.

Alteration of alignment settings influences corner focus, geometry, beam size and registration. Poor alignment can moreover cause lag problems or a degradation of picture quality with regard to spots and blemishes.

2.10 During long standby periods, the following procedure should be adopted:

- Cap the camera lens.
- Adjust the grid 1 voltage to its maximum negative value to cut off the beam.
- Reduce the heater voltage to about 4 V.

To resume normal operation, reverse the above sequence as follows:

- Increase heater voltage to 6,3 V.
- After allowing heater to operate at 6,3 V for at least 1 minute, adjust the grid 1 voltage to restore the beam current to its required level.
- Uncap the camera lens.

TEST SPECIFICATION FOR PLUMBICON ® TUBES

(with plain glass faceplate)

SECTION A

Test conditions

All tests on Plumbicon tubes are carried out in the manufacturer's test channel under the following conditions:

1. *Light source:* 2856 K colour temperature (broadcast and industrial tubes);
   P20 light distribution (tubes for medical X-ray equipment).
2. *Filter:*

   For chrominance tubes colour filters are inserted in the light path:
   for R tubes: Schott OG570, thickness 3 mm
   for G tubes: Schott VG9, thickness 1 mm
   for B tubes: Schott BG12, thickness 3 mm
   For tubes with extended red response but without an infrared reflecting filter on the anti-halation glass disc an additional infrared reflecting filter is inserted in the light path. The filter used is Balzers Calflex B1/K1.
   For X-ray tubes: Schott VG9, thickness 1 mm
   For transmission of the filters see Figs 4 and 5.
3. *Test transparency,* back-illuminated, projected onto the target by means of a high quality lens, producing an even illumination on the specified scanned area.
   The test transparency has an aspect ratio of 3 : 4 for the evaluation of broadcast and industrial quality tubes. The area of the chart is divided into three quality zones by two concentric circles as shown in Fig. 1.

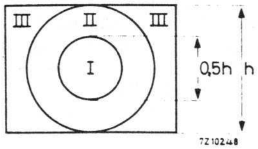

Fig. 1.

A circular test transparency is used for the evaluation of tubes for medical X-ray equipment. The area of the chart is divided into three quality zones by two concentric circles as shown in Fig. 2.

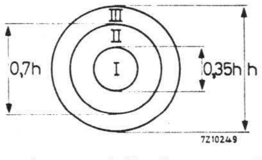

Fig. 2.

4. *The video amplifier frequency response* is essentially flat up to 5 MHz, with a sharp fall-off to 6 MHz.
5. *No gamma correction or aperture correction* are applied in the video amplifier.
6. *The light level* on the Plumbicon tube target is adjusted to produce a peak signal current I_s in accordance with Table 1.

® Registered Trade Mark for television camera tube.

7. *The electrical settings* of the tube are in accordance with its published data and the "Instructions for use".
8. *The beam current* of the Plumbicon tube is adjusted to just stabilize a peak signal current of magnitude I_b in accordance with Table 1.
9. *Monitor.* The obtained picture is observed on a monitor producing a non-blooming white.

Table I I_s and I_b settings

tube diameter		30 mm (1¼ inch)		25 mm (1 inch)		18 mm (2/3 inch)		14 mm (½ inch)	
scanned area		12,8 mm x 17,1 mm		9,6 mm x 12,8 mm		6,6 mm x 8,8 mm		4,8 mm x 6,4 mm	
		I_s µA	I_b µA	I_s µA	I_b µA	I_s µA	I_b µA	I_s µA	I_b µA
broadcast quality tubes	luminance	0,30	0,60	0,2	0,4	0,15	0,30	0,10	0,20
	black & white	0,30	0,60	0,2	0,4	0,15	0,30	0,10	0,20
	red R	0,15	0,30	0,1	0,2	0,075	0,15	0,05	0,10
	green G	0,30	0,60	0,2	0,4	0,15	0,30	0,10	0,20
	blue B	0,15	0,30	0,1	0,2	0,075	0,15	0,05	0,10
industrial quality tubes	black & white	0,30	0,60	0,2	0,4	0,15	0,30	0,10	0,20
	red R	0,15	0,30	0,1	0,2	0,075	0,17	0,05	0,10
	green G	0,30	0,60	0,2	0,4	0,15	0,30	0,10	0,20
	blue B	0,15	0,30	0,1	0,2	0,075	0,15	0,05	0,10
X-ray medical tubes**	P20 light source	scanned area* 18 mm dia.		scanned area* 15 or 16,2 mm dia.		tube diameter 30 mm enlarged scan* 26 mm dia.			
		0,15	0,30	0,1	0,2	$I_s = 0,4$ $I_b = 0,8$			

SECTION B

Spurious signal specification.

Blemishes. Both spots (sharply defined) and smudges (with vague contours) are termed blemishes. Blemishes are small areas producing uneven modulation of any signal current between black level (black current) and white level (peak signal current).

---

* Scanning amplitude controls adjusted such that the circular quality area of the target is displayed on a standard monitor as a circular area with a diameter equal to the raster height.

** For use in combination with X-ray image intensifier.

SECTION C

Broadcast quality tubes

The degrading effect caused by a blemish on the quality of the picture as observed on the monitor is expressed in its Spot Nuisance Value (S.N.V.).

The S.N.V. of a blemish is basically defined as the product of its size (measured in % of the picture height, with a special test transparency) and its contrast (or modulation depth) in % of the peak signal current produced by the circular area of the target, having a diameter of 5% of the picture height, which encircles this blemish.
The contrast is measured on a waveform oscilloscope provided with a line selector.

Table 1 shows which blemishes are to be neglected because of their small size or contrast, and how the actual S.N.V. is determined per type of tube for dark and white blemishes (see also the addendum to this section).

Tables 2 and 3 define the maximum number of blemishes and the maximum sum of S.N.V. per tube type, per zone, and the total which are allowed.

Table 1 Tubes with 30 mm, 25 mm, 18 mm and 14 mm diameter

notes

		Black and white Luminance L Green G	Red R	Blue B	1
To be neglected	size	⩽ 0,2%	⩽ 0,2%	⩽ 0,2%	2
	contrast	⩽ 5% ⩽ 6%*	⩽ 8%	⩽ 8% ⩽ 10%*	
S.N.V. of	white blemish	2 x M.V.	1 x M.V.		3
	dark blemish	1 x M.V.			
Max. S.N.V.	per blemish	20	20	20	

Table 2

	bl/wh, L, G, R				B				4
Zone	I	II	III	tot.	I	II	III	tot.	
Max. number	0	2	3	4	1	3	4	6	
Max. sum of S.N.V.	0	30	50	60	20	45	80	90	5

Table 3 14 mm diameter tubes

	Black and white Green G				Red R				Blue B				4
Zone	I	II	III	tot.	I	II	III	tot.	I	II	III	tot.	
Max. number	1	2	3	4	1	3	4	6	2	4	6	8	
Max. sum of S.N.V.	10	30	50	60	15	45	80	100	20	50	90	110	5

* ⩽ 6% and ⩽ 10% are for tubes with 14 mm diameter.

ADDENDUM

Black blemishes with a white surrounding and white blemishes with a black core. On the oscilloscope the general shape of such a blemish will be as shown in Fig. 3.

Fig. 3.

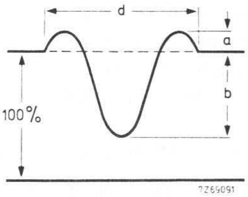

A blemish shall be considered to be a white blemish if a ⩾ b (S.N.V. = a x d or 2 x a x d in accordance with Table II) or a black blemish if b > a (S.N.V. = b x d).

Notes

1. No blemishes > 0,2% shall be visible when the lens is capped.
2. Blemishes of this size are not counted unless their concentration causes a smudged appearance. Such concentrations are evaluated as blemishes and as contrast, the average contrast of the concentration is taken.
3. M.V. = measured value (size x contrast).
4. The minimum distance as measured in any direction between any two blemishes with S.N.V. ⩾ 10 shall be 5% of picture height.
5. Arithmetic sum individual S.N.V.s.

SECTION D

notes

Industrial quality tubes 1

Number, size, and location of blemishes allowed.

Dimensions of blemishes in % of picture height	Permitted number of blemishes				
	Zone I	Zone II	Zone III	Total	
⩽ 2% but > 1%	0	1	2	2	2
⩽ 1% but > 0,7%					
⩽ 0,7% but > 0,45%	1	2	4	4	
⩽ 0,45% but > 0,2%	2	4	6	6	
⩽ 0,2%					3
Total permitted number of blemishes	2	4	6	6	4

Notes

1. Blemishes with contrast ⩽ 10% shall not be counted.
2. Blemishes of these dimensions are not allowed when their contrast exceeds 20%.
3. Blemishes of this size are not counted unless their concentration causes a smudged appearance. Such concentrations are evaluated as blemishes and as contrast, the average contrast of the concentration is taken.
4. The distance between any two blemishes with dimensions > 0,45% shall be greater than 5% of picture height as measured in any direction.

SECTION E

Tubes for medical X-ray equipment

Number, size, and location of blemishes allowed. 1

Dimensions of blemishes in % of picture height	Permitted number of blemishes			
	Zone I	Zone II	Zone III	
> 0,7%	0	0	0	
⩽ 0,7% but > 0,45%	0	1	3	
⩽ 0,45% but > 0,2%	2	3	6	
⩽ 0,2%				2
Total permitted number of blemishes	2	6		

Notes

1. Blemishes with contrast ⩽ 6% (if black) and ⩽ 3% (if white) are neglected.
2. Blemishes of this size are not counted unless their concentration causes a smudged appearance. Such concentrations are evaluated as blemishes and as contrast, the average contrast of the concentration is taken.

SECTION F

Sensitivity

The luminous sensitivity is measured under the following conditions:
Light source: colour temperature 2856 K.
Filter: Appropriate filter inserted in the light path.
The illuminance level of the white light at the faceplate or for chrominance tubes before the filter is adjusted to 4,54 lx.
For 30 mm tubes the luminous flux at the scanned area on the faceplate or before the filter is now 1 mlm. In this case the measured signal current in nA gives directly the sensitivity in μA/lm(F).
For 30 mm tubes with enlarged scanning the signal current readings should be multiplied by 0,67 to give the sensitivity in μA/lm(F).
For 25 mm tubes the signal current reading should be multiplied by 1,8.
For 18 mm tubes the signal current reading should be multiplied by 3,8.
For 14 mm tubes the signal current reading should be multiplied by 7,1.

SECTION G

Resolution

Resolution is measured with a 50 mm Leitz Summicron lens having a sine response of approximately:
85% at 400 TV lines at f : 5,6 for 30 mm and 25 mm tubes;
80% at 400 TV lines at f : 5,6 for 18 mm tubes;
80% at 320 TV lines at f : 5,6 for 14 mm tubes.
The resolution is measured with the appropriate colour filter inserted in the light path as described in section A. However, for 18 mm and 14 mm tubes a BG12 filter with a thickness of 1 mm is used for the blue tubes.
The beam current and signal current are to be adjusted as indicated in the relevant tube data.
tube. The horizontal amplitude response can be raised by the application of suitable correction circuits.

SECTION H

Lag

Lag is measured with the appropriate colour filters inserted in the light path. Beam current and signal current are to be adjusted as indicated in the relevant tube data.

Build-up lag is measured after a minimum of 10 s of darkness. The figures are typical percentages of the ultimate signal current obtained 60 ms and 200 ms respectively after introduction of the illuminance.

Decay lag is measured after a minimum of 5 s of illumination on the target. The figures represent typical residual signals in percentages of the original signal current, 60 ms and 200 ms respectively after removal of the illuminance.

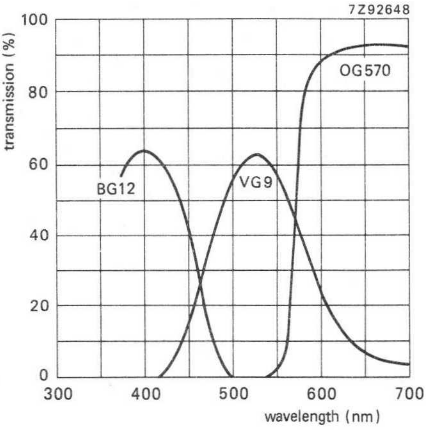

Fig. 4 Transmission of filters BG12, VG9 and OG570.

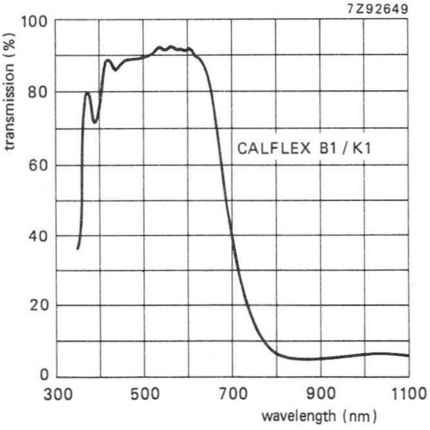

Fig. 5 Typical transmission curve of heat reflecting interference filter CALFLEX B1/K1.

30 mm dia. PLUMBICON TUBES

CAMERA TUBE

30 mm (1,2 inch) diameter Plumbicon® television camera tube, with standard resolution lead-oxide photoconductive target. The XQ1022 is exclusively intended for use with X-ray image intensifiers with P20 output phosphor in medical equipment.

QUICK REFERENCE DATA

Diameter		30 mm (1,2 inch)
Length	approx.	204 mm
Focusing	magnetic	
Deflection	magnetic	
Useful target area, circle, diameter		18 mm
Spectral response		
max. at	approx.	450 nm
cut-off:	approx.	650 nm
Sensitivity, P20 light source	typ.	530 μA/lm
Resolution at 10,5 lp/mm (5 MHz)		55 %
Heater		6,3 V, 190 mA

OPTICAL DATA

Quality area on photoconductive target, circle, diameter	18 mm

Orientation of image on target:

For correct orientation of the image on the target the vertical scan should be essentially parallel to the plane passing through the tube axis and the marker line on the protecting sleeve at the base

Faceplate	
Thickness	1,2 ± 0,1 mm
Refractive index	n = 1,49

Without anti-halation glass disc

ACCESSORIES

Socket	type 56021 or 56603
Deflection and focusing coil unit	type AT1130S

ELECTRICAL DATA

Deflection		magnetic
Focusing		magnetic
Heating, indirect by a.c. or d.c.		
Heater voltage	V_v	6,3 V ± 5%
Heater current at $V_f = 6,3$ V	I_f nom	190 mA

The heater voltage must not exceed an r.m.s. value of 9,5 V. For optimum performance stabilization of the heater voltage is recommended.

Capacitance		
Signal electrode to all	C_{as}	3 to 6 pF

This capacitance, which is effectively the output impedance, increases when the tube is inserted in the coil unit.

® Registered trademark for television camera tubes.

LIMITING VALUES (Absolute maximum rating system)

Unless otherwise stated, all voltages are referred to the cathode.

					notes
Signal electrode voltage	V_{as}	max.	50	V	
Grid 4 voltage	V_{g4}	max.	1100	V	
Grid 3 voltage	V_{g3}	max.	800	V	
Voltage between grid 4 and grid 3	$V_{g4/g3}$	max.	350	V	
Grid 2 voltage	V_{g2}	max.	350	V	
Grid 2 dissipation	W_{g2}	max.	1	W	
Grid 1 voltage					
positive	V_{g1}	max.	0	V	
negative	$-V_{g1}$	max.	125	V	
Cathode heating time before drawing cathode current	t_h	min.	1	min.	
Cathode to heater voltage					
positive peak	V_{kfp}	max.	50	V	
negative peak	$-V_{kfp}$	max.	50	V	
Ambient temperature, storage and operation	T_{amb}	max.	50	°C	
		min.	−30	°C	
Faceplate temperature, storage and operation	T	max.	50	°C	1
		min.	−30	°C	
Faceplate illuminance	E	max.	500	lx	2

OPERATING CONDITIONS

For a scanned circular area with a diameter of 18 mm					3
Cathode voltage	V_k		0	V	
Signal electrode voltage	V_{as}		45	V	
Beam current	I_b				4
Grid 4 voltage	V_{g4}		675	V	
Grid 3 voltage	V_{g3}		600	V	
Grid 2 voltage	V_{g2}		300	V	
Grid 1 voltage	V_{g1}			V	4
Blanking voltage on grid 1, peak to peak	V_{g1p-p}		50 ± 10	V	
Faceplate illuminance	E	approx.	2	lx	
Faceplate temperature	T		20 to 45	°C	

ELECTRON GUN CHARACTERISTICS

Cut-off				
Grid 1 voltage for cut-off at V_{g2} = 300 V, without blanking	V_{g1}		−30 to −100	V
Blanking voltage, peak to peak				
on grid 1	V_{g1p-p}		50 ± 10	V
on cathode	V_{kp-p}		25	V
Grid 2 current at normally required beam currents	I_{g2}	⩽	1	mA

PERFORMANCE

						notes
Dark current	I_d		⩽	3	nA	
Sensitivity at colour temperature of illuminance = 2856 K	min.	130	typ.	175	μA/lmF	5
Sensitivity with P20 light source	min.	395	typ.	530	μA/lm	
Peak signal current with E = 1 lx (P20)	min.	230	typ.	305	nA	6
Gamma of transfer characteristic			0,95 ± 0,05			
Spectral response, max. at	approx.			450	nm	
Spectral response, cut-off at	approx.			650	nm	
Spectral response curve	see Fig. 1					
Resolution						7
Modulation depth, i.e. uncompensated amplitude response at 10,5 lp/mm (scanned area circle, diameter 18 mm) at the centre of the picture (5 MHz, 400 TV lines)			typ.	55	%	
Decay lag, light source P20, measured with a signal current of 100 nA, beam adjusted for correct stabilization after the target has been illuminated for at least 5 s.						
Residual signal after dark pulse						
of 60 ms	max.	10	typ.	5	%	
of 200 ms	max.	4	typ.	2	%	

MECHANICAL DATA

Dimensions in mm

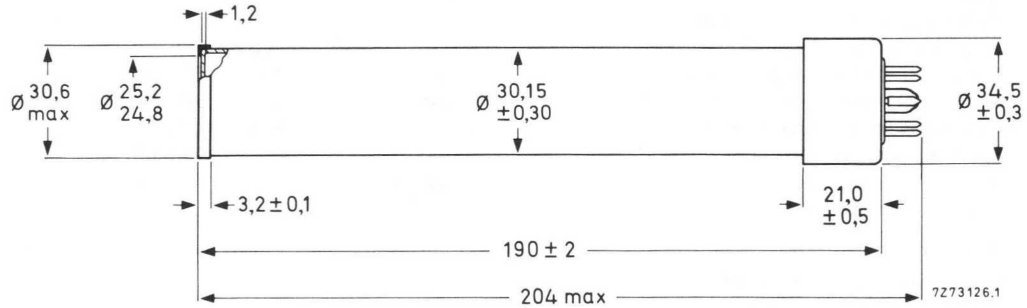

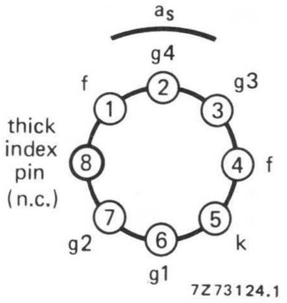

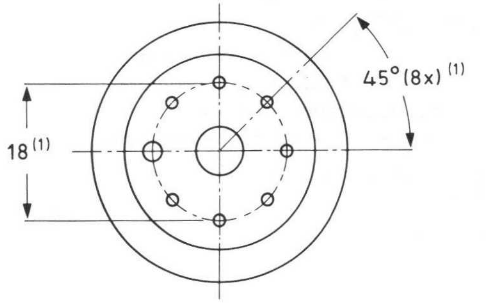

Mounting position: any

Net mass: ≈ 100 g

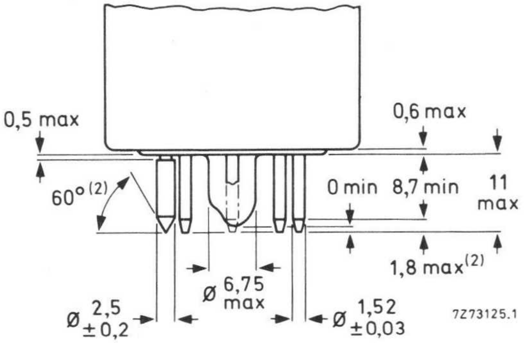

(1) The base passes a flat gauge with a centre hole with a diameter of 8,230 ± 0,005 mm and holes for passing the pins with the following diameters: 7 holes of 1,690 ± 0,005 mm and one hole of 2,950 ± 0,005 mm. The holes may deviate max. 0,01 mm from their true geometrical position. Thickness of gauge: 7 mm.

(2) The ends of the pins are tapered and/or rounded but not brought to a sharp point.

NOTES, see also General Section.

1. The tube can withstand short excursions up to 70 °C without damage or irreversible degradation in performance.
2. For short intervals. During storage the tube face shall be covered with the plastic hood provided; when the camera is idle the lens shall be capped, in stand-by also the beam will be cut-off.
3. The operating conditions and performance data quoted relate to operation of the tube in coil unit AT1130. See relevant data of deflection/focusing assemblies. Scanning amplitude should be adjusted such that the useful target area of 18 mm is displayed on a standard monitor as a circular area with a diameter equal to the raster height.
4. The beam current I_b, as obtained by adjusting the control grid (grid 1) voltage is set to max. 600 nA. I_b is not the actual current available in the scanning beam, but is defined as the maximum amount of signal, I_s, that can be obtained with this beam. See note 6.
5. Measuring conditions: illuminance level 4,54 lx at a colour temperature of 2856 K and a filter Schott VG9 inserted in the light path. For transmission of the filter, see General Section.
6. The peak signal currents are measured on a waveform oscilloscope and with a uniform illumination on the 18 mm diameter target area. When measured with an integrating instrument connected in the signal-electrode lead the average signal currents will be smaller:

   a. by a factor α $(\alpha = \frac{100 - \beta}{100}$, β being the total blanking time in %)

   For the CCIR system α amounts to 0,75

   b. by a factor δ, δ being the ratio of the active target area (circle with adjusted 18 mm diameter) to the adjusted scanning amplitudes (18 x 24 mm). This ratio amounts to $\delta = 0{,}59$. The total ratio of integrated signal current, I_s, to the peak signal current, I_{sp}, amounts to $\alpha \times \delta = 0{,}44$.
7. As measured with a 50 mm Leitz Summicron lens having a sine response of approximately 85% at 400 TV lines at f : 5,6. The published 55% typ. is uncorrected. Tube resolution is higher. Measured with 100 nA signal current and a beam current just sufficient to stabilize a signal current of 500 nA. The horizontal amplitude response can be raised by means of suitable correction circuits, which affect neither the vertical resolution nor the limiting resolution.

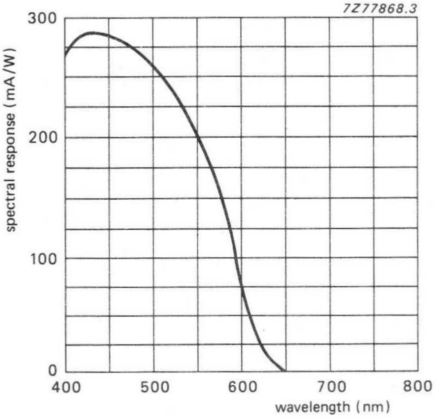

Fig. 1 Typical spectral response for XQ1022.

CAMERA TUBES

30 mm (1,2 inch) diameter Plumbicon® television camera tubes, with high resolution lead-oxide photoconductive target, for use in high quality monochrome or colour cameras for broadcast, educational or industrial applications.

The XQ1410 series comprises the following versions:

XQ1410	for use in monochrome cameras
XQ1410L	for use in the luminance channel of colour cameras
XQ1410R	for use in the red channel
XQ1410G	for use in the green channel
XQ1410B	for use in the blue channel
XQ1413R	for use in the red channel; extended red response
XQ1415R	for use in the red channel; extended red response and IR filter
XQ1415L	for use in the luminance channel of colour cameras

The tubes of the XQ1410 series are interchangeable with those of the XQ1020 series and feature an increased resolution and provisions for both fixed and adjustable light bias for reduction of lag under low key conditions.

QUICK REFERENCE DATA

Diameter		30	mm (1,2 inch)
Length	approx.	215	mm
Provided with anti-halation glass disc			
Focusing	magnetic		
Deflection	magnetic		
Useful target area (scanning area)		12,8 x 17,1	mm
Spectral response			
max. at	approx.	450	nm
cut-off: XQ1410	approx.	650	
XQ1413	approx.	850 to 950	nm
XQ1415	approx.	750	nm
Sensitivity			
XQ1410, XQ1410L	typ.	400	μA/lm
XQ1410R	typ.	80	μA/lmF
XQ1410G	typ.	170	μA/lmF
XQ1410B	typ.	40	μA/lmF
XQ1413R, XQ1415R	typ.	120	μA/lmF
XQ1415L	typ.	435	μA/lm
Resolution at 400 TV lines (5 MHz)			
XQ1410, XQ1410L	typ.	55	%
XQ1410R	typ.	50	%
XQ1410G	typ.	55	%
XQ1410B	typ.	60	%
XQ1413R, XQ1415R	typ.	55	%
XQ1415L	typ.	60	%
Heater		6,3	V, 190 mA

® Registered trademark for television camera tubes.

OPTICAL DATA

		notes
Quality rectangle on photoconductive target (aspect ratio 3 : 4)	12,8 x 17,1 mm	
Orientation of image on target:		
For correct orientation of the image on the target the vertical scan should be essentially parallel to the plane passing through the tube axis and the marker line on the protecting sleeve at the base		
Faceplate		
Thickness	1,2 + 0,1 mm	
Refractive index	n = 1,49	
Anti-halation glass disc provided with anti reflective coating		
Thickness	6 + 0,2 mm	
Refractive index	n = 1,52	

XQ1415R and XQ1415L are provided with infrared reflecting filter

ACCESSORIES

		notes
Socket	type 56021 or 56603	
Deflection and focusing coil unit:		
Black/white	type AT1130S	
Colour	type AT1130T	
Mask for flare reduction	type 56029	
For adjustable light bias: lamp in holder	type 56106	1
Adaptors for fixed light bias R tubes	type 56123	1
Adaptors for fixed light bias G, L tubes	type 56124	
Adaptors for fixed light bias B tubes	type 56125	

ELECTRICAL DATA

			notes
Deflection		magnetic	
Focusing		magnetic	
Heating, indirect by a.c. or d.c.; parallel supply			
Heater voltage	V_f	6,3 V ± 5%	
Heater current at $V_f = 6{,}3$ V	I_f nom.	190 mA	
Heater current with light bias adaptor		300 mA	
The heater voltage must not exceed an r.m.s. value of 9,5 V. For optimum performance (lifetime and registration stability) stabilization of the heater voltage is recommended.			
Capacitance			
Signal electrode to all	C_{as}	3 to 6 pF	
This capacitance, which is effectively the output impedance, increases when the tube is inserted in the coil unit.			

LIMITING VALUES (Absolute maximum rating system)

Unless otherwise stated, all voltages are referred to the cathode.

					notes
Signal electrode voltage	V_{as}	max.	50	V	
Grid 4 voltage	V_{g4}	max.	1100	V	
Grid 3 voltage	V_{g3}	max.	800	V	
Voltage between grid 4 and grid 3	$V_{g4/g3}$	max.	350	V	
Grid 2 voltage	V_{g2}	max.	350	V	
Grid 2 dissipation	W_{g2}	max.	1	W	
Grid 1 voltage					
positive	V_{g1}	max.	0	V	
negative	$-V_{g1}$	max.	125	V	
Cathode heating time before drawing cathode current	t_h	min.	1	min.	
Cathode to heater voltage					
positive peak	V_{kfp}	max.	50	V	
negative peak	$-V_{kfp}$	max.	50	V	
Ambient temperature, storage and operation	T_{amb}	max. min.	50 −30	°C °C	
Faceplate temperature, storage and operation	T	max. min.	50 −30	°C °C	2
Faceplate illuminance	E	max.	500	lx	3

OPERATING CONDITIONS

For a scanned area of 12,8 x 17,1 mm				4
Cathode voltage	V_k	0	V	
Signal electrode voltage	V_{as}	45	V	
Beam current	I_b			5
Grid 4 voltage	V_{g4}	675	V	
Grid 3 voltage	V_{g3}	600	V	
Grid 2 voltage	V_{g2}	300	V	
Grid 1 voltage	V_{g1}		V	5
Blanking voltage on grid 1, peak to peak	$V_{g1p\text{-}p}$	50 ± 10	V	
Faceplate illuminance	E	0 to 10	lx	6
Temperature of faceplate	T	20 to 45	°C	

ELECTRON GUN CHARACTERISTICS

Cut off				
Grid 1 voltage for cut-off at V_{g2} = 300 V, without blanking	V_{g1}		−30 to −100	V
Blanking voltage, peak to peak				
on grid 1	$V_{g1p\text{-}p}$		50 ± 10	V
on cathode	$V_{kp\text{-}p}$		25	V
Grid 2 current at normally required beam currents	I_{g2}	≤	1	mA

PERFORMANCE

						notes
Dark current (without lightbias)	I_d		⩽	2	nA	
Sensitivity at colour temperature of illuminance = 2856 K						7
XQ1410, XQ1410L	min.	365	typ.	400	μA/lm	
XQ1410R	min.	70	typ.	80	μA/lmF	
XQ1410G	min.	135	typ.	170	μA/lmF	
XQ1410B	min.	35	typ.	40	μA/lmF	
XQ1415L	min.	390	typ.	435	μA/lmF	
XQ1413R, XQ1415R	min.	110	typ.	120	μA/lm	
Gamma of transfer characteristics			0,95 ± 0,05			
Spectral response, max. at	approx.			450	nm	
Spectral response, cut-off at	approx.			650 to 950	nm	
Spectral response curves	see Figs 1, 2 and 3					
Resolution						8

Modulation depth, i.e. uncompensated amplitude response at 400 TV lines at the centre of the picture.

	XQ1410L XQ1410G	XQ1410R	XQ1410B	XQ1415L	XQ1413R XQ1415R	
Highlight signal current I_s	300	150	150	300	150	nA
Beam current I_b	600	300	300	600	300	nA
Modulation depth at 400 TV lines						
typ.	55	50	60	60	55	%
min.	50	40	50	50	45	%

Modulation transfer characteristics: see Fig. 4

Lag (typical values) 9, 10

Light source with a colour temperature of 2856 K. Appropriate filter inserted in the light path for the chrominance tubes R, G and B.

LOW KEY CONDITIONS (with light bias of 3 nA)

	build-up lag		decay lag	
	I_s/I_b = 20/300 nA		I_s/I_b = 20/300 nA	
	60 ms	200 ms	60 ms	200 ms
XQ1410, L, G	98%	≈ 100%	7%	2%
XQ1410R	98%	≈ 100%	8%	3%
XQ1410B	95%	≈ 100%	11%	3,5%
XQ1413R	90%	≈ 100%	13%	3,5%
XQ1415R	90%	≈ 100%	13%	3,5%
XQ1415L	95%	≈ 100%	8%	3%

Typical effect of light bias on build-up and decay lag under low key signal current and beam settings are shown in Figs 5 to 14

Shading of light bias induced dark current 12,5% 11

MECHANICAL DATA

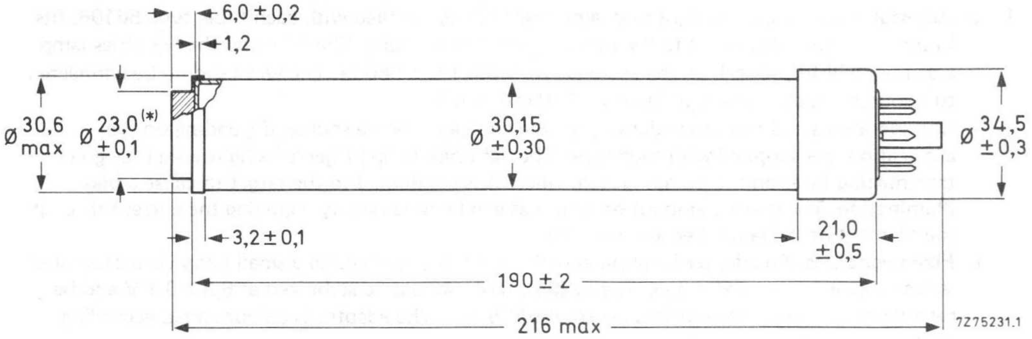

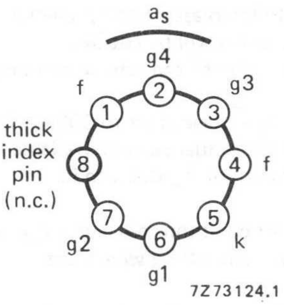

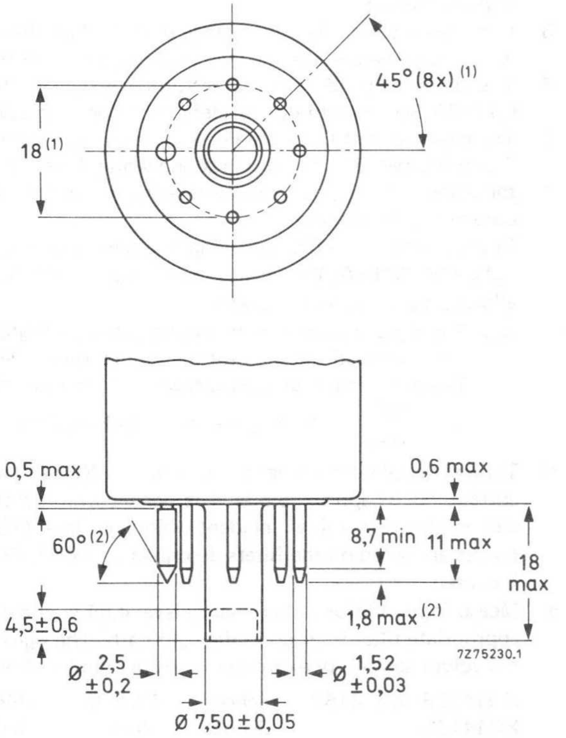

Mounting position: any

Mass: ≈ 100 g

(*) Distance between axis of anti-halation glass disc and geometrical centre of signal electrode ring, measured in plane of faceplate: max. 0,2 mm. Total glass thickness: 7,2 ± 0,2 mm.

(1) The base passes a flat gauge with a centre hole 8,230 ± 0,005 mm diameter and holes for passing the pins with the following diameters: 7 holes of 1,690 ± 0,005 mm and one hole of 2,950 ± 0,005 mm. The holes may deviate max. 0,01 mm from their true geometrical position. Thickness of gauge 7 mm.

(2) The ends of the pins are tapered and/or rounded but not brought to a sharp point.

NOTES, see also General Section.

1. a. **Adjustable light bias.** The light bias lamp assembly as supplied with each tube, type 56106, fits in the metal tube cemented to the pumping stem of the tube. The tube and the light bias lamp assembly will fit properly in the sockets type 56021 and 56603. The wires should be connected to a source, capable of supplying max. 110 mA at 5 V.
   Considerations and recommendations for the choice of such a source, depending on the application, are supplied with each tube. The light bias lamp projects its light via a blue-green transmitting filter on the pumping stem where it is conducted to the target to cause a bias illumination. The desired amount of light bias can be obtained by adjusting the current through the filament of the lamp. See also note 10.

   b. **Fixed light bias.** An adapter is supplied with each tube, connecting a small lamp via a calibrated series resistor to the heater pins. The heater supply should be stabilized at 6,3 ± 0,1 V and be capable of supplying an additional current of 95 mA. The adaptor is colour coded according to the application of the tube.
2. The tube can withstand short excursions up to 70 °C without damage or irreversible degradation in performance.
3. For short intervals. During storage the tube face shall be covered with the plastic hood provided; when the camera is idle the lens shall be capped, in stand-by also the beam will be cut-off.
4. The operating conditions and performance data quoted relate to operation of the tube in coil unit AT1130. See relevant data of deflection/focusing assemblies.
5. The beam current I_b, as obtained by adjusting the control grid (grid 1) voltage is set to 300 nA for R and B tubes, 600 nA for black and white, L and G tubes. I_b is not the actual current available in the scanning beam, but is defined as the maximum amount of signal current, I_s, that can be obtained with this beam.
   In the performance figures for lag, the signal current and beam current conditons are given, e.g. as I_s/I_b = 20/300 nA. This means: with a signal current of 20 nA and a beam setting which just allows a signal current of 300 nA.
   N.B. The signal currents are measured with an integrating instrument connected in the signal electrode lead and a uniform illumination of the scanned area.
   The peak signal currents as measured on a waveform oscilloscope will be a factor α larger.
   $\alpha = \frac{100}{100-\beta}$; β being the total blanking time in %: for the CCIR system $\alpha = 1,3$.
6. Typical faceplate illumination level for the XQ1410 and XQ1410L to produce 300 nA signal current will be approx. 3,5 lx. The signal currents stated for the colour tubes XQ1410R, G and B will be obtained with an incident white light level (2856 K) on the filter of approx. 8,5 lx. These figures are based on the filters described in note 7. For filter BG12, however, a thickness of 1 mm is chosen.
7. Measuring conditions: illuminance level 4,54 lx at a colour temperature of 2856 K and the appropriate filter inserted in the light path. The signal current obtained in nA is a measure of the colour sensitivity expressed in μA per lumen of white light before the filter. Filters used are:

XQ1410R, XQ1415R	Schott	OG570	thickness	3 mm
XQ1410G	Schott	VG9	thickness	1 mm
XQ1410B	Schott	BG12	thickness	3 mm
XQ1413R	Schott	OG570	thickness	3 mm
	and Calflex	B1/K1		

For transmission curves see General Section.

8. As measured with a 50 mm Leitz Summicron lens having a sine response of approximately 85% at 400 TV lines at f : 5,6 and the appropriate filter inserted in the light path. The horizontal amplitude response can be raised by means of suitable correction circuits, which affect neither the vertical resolution nor the limiting resolution.
9. **Build-up lag**
   After 10 s of darkness. The figures are typical percentages of the ultimate signal current obtained 60 ms and 200 ms, respectively, after the introduction of the illuminance.
   Decay lag
   After the target has been illuminated for at least 5 s. The figures represent typical signals in percentages of the original signal current 60 ms and 200 ms, respectively, after removal of the illuminance.
10. A reduction lag, especially under low key conditions is obtained when light bias is applied. Infrared light with a wavelength > 600 nm in the light bias should be avoided.
    a. For monochrome operation a light bias corresponding to 4,5 nA dark current is usually adequate for excellent speed of response. The adapter as supplied with the tube will produce a fixed light bias in the order of this magnitude.
    b. *Adjustable* light bias (colour camera).
    In a colour camera the speeds of response of the tubes can be balanced by adjusting the amount of light bias per tube.
    In a 3-tube colour camera for instance it is recommended to first adjust the tubes to their normal highlight signal current and beam current settings and then point the camera at a dark scene comprising a metronome. The moving hand of the metronome carries a small white square. The illuminance should be chosen such that the square produces a peak signal of approximately 50 nA in the green chrominance channel. A maximum of 3 nA artificial dark current shall then be introduced in the green chrominance tube. Subsequently light bias shall be applied to the tubes in the red and blue channels until the lag of the three tubes is neutralized.
    c. *Fixed* light bias (colour camera).
    A typical setting for correct speeds of response in a 3-tube colour camera would be approximately 3 nA(p) (R), 2 nA(p) (G) and 3,5 nA(p) (B). The adapters as supplied with the tubes will produce fixed bias of the same magnitude.
11. Deviation of the level of any of the four corners, i.e. 10% inwards in H and V direction from the level in the picture centre. With the settings suggested in note 10 black shading compensation in the camera video processing amplifier will not normally be required. Further improvement in lag can be obtained by applying still higher light bias levels. It may then be necessary to use black shading compensation in the video processing amplifier.

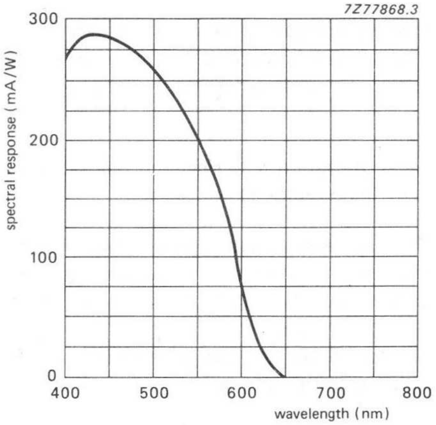

Fig. 1 Typical spectral response for XQ1410.

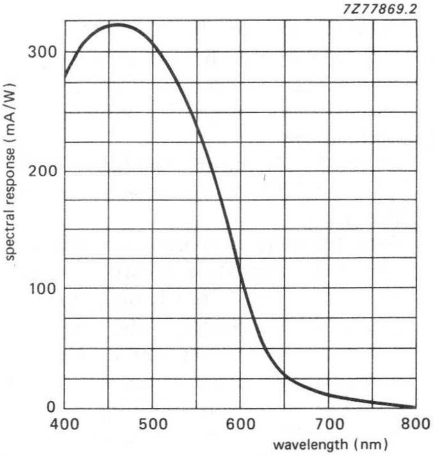

Fig. 2 Typical spectral response for XQ1413.

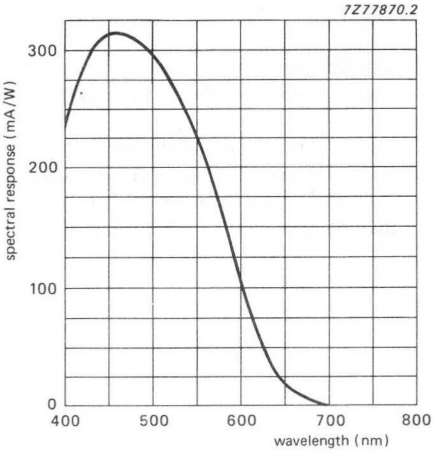

Fig. 3 Typical spectral response for XQ1415.

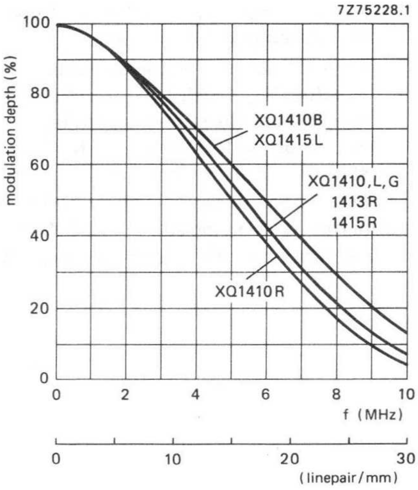

Fig. 4 Typical square wave response curves.

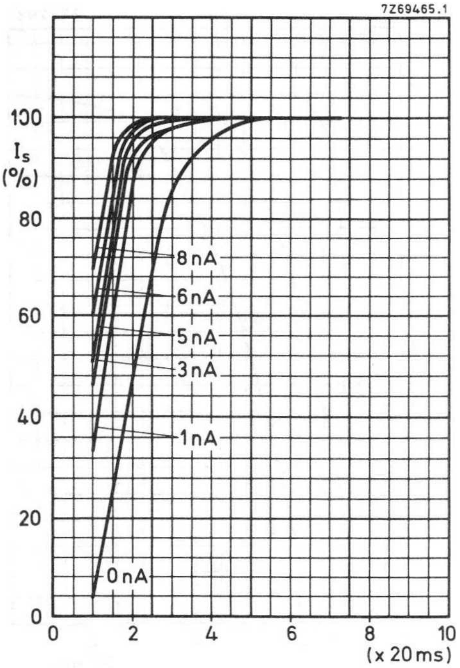

Fig. 5.

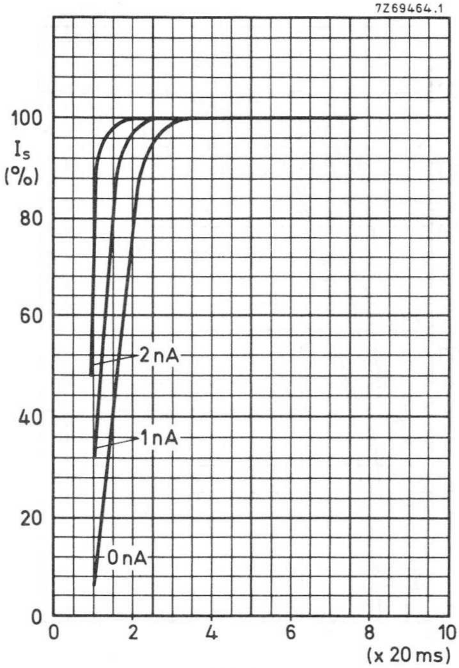

Fig. 6.

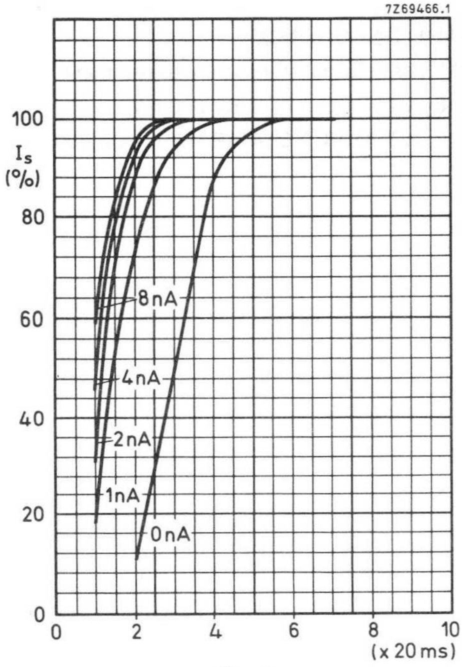

Fig. 7.

Build-up lag (see note 9)

Light bias induced dark current as parameter.

Fig. 5 XQ1410R : I_s/I_b = 20/300 nA.

Fig. 6 XQ1410, XQ1410L, XQ1419G: I_s/I_b = 40/600 nA.

Fig. 7 XQ1410B : I_s/I_b = 20/300 nA.

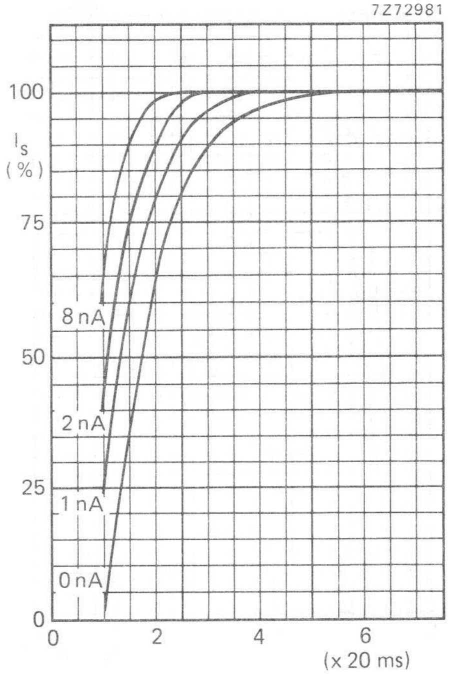

Fig. 8.

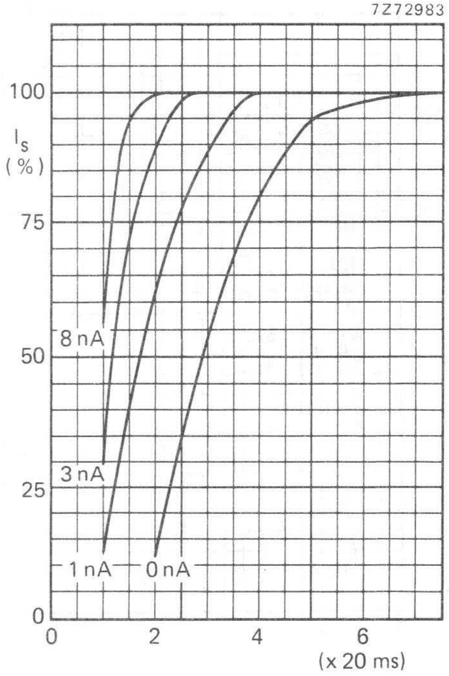

Fig. 9.

Build-up lag (see note 9)

Light bias induced dark current as parameter.

Fig. 8 XQ1415L: I_s/I_b = 40/600 nA.

Fig. 9 XQ1413R, XQ1415R: I_s/I_b = 20/300 nA.

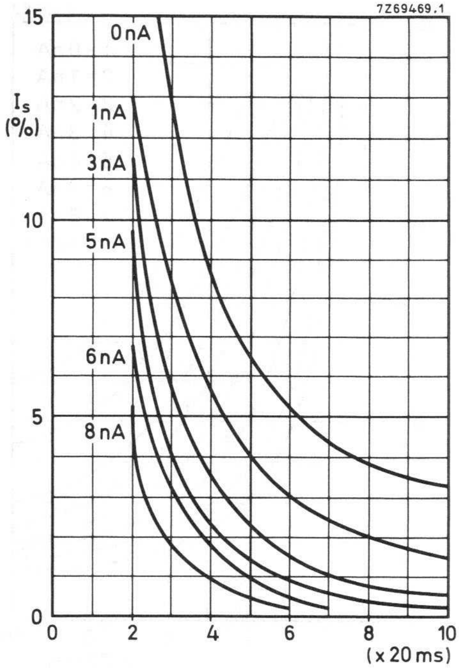

Fig. 10.

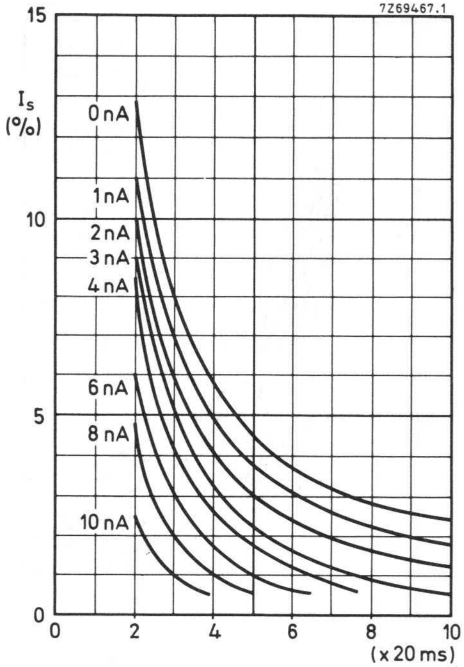

Fig. 11.

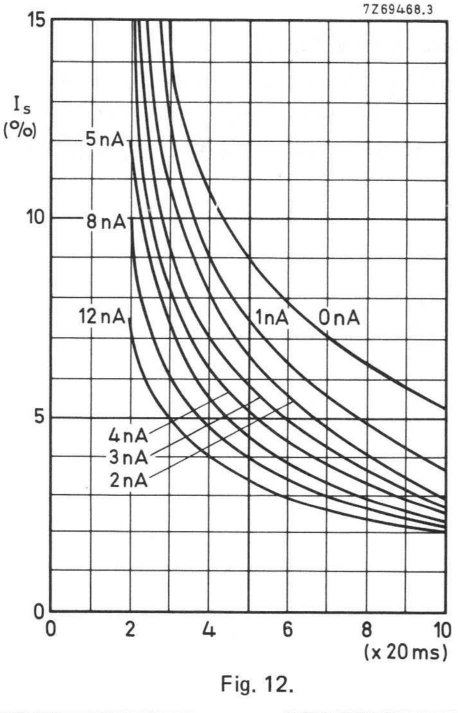

Fig. 12.

Decay lag (see note 9)

Light bias induced dark current as parameter.

Fig. 10 XQ1410R : I_s/I_b = 20/300 nA.

Fig. 11 XQ1410, XQ1410L, XQ1410G: I_s/I_b = 40/600 nA.

Fig. 12 XQ1410B : I_s/I_b = 20/300 nA.

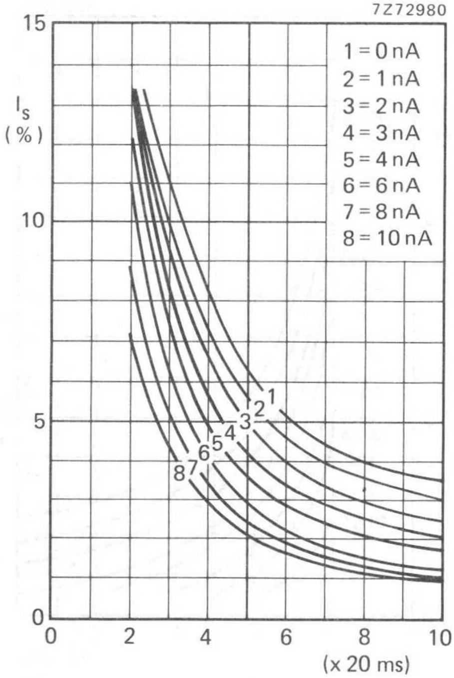

Fig. 13.

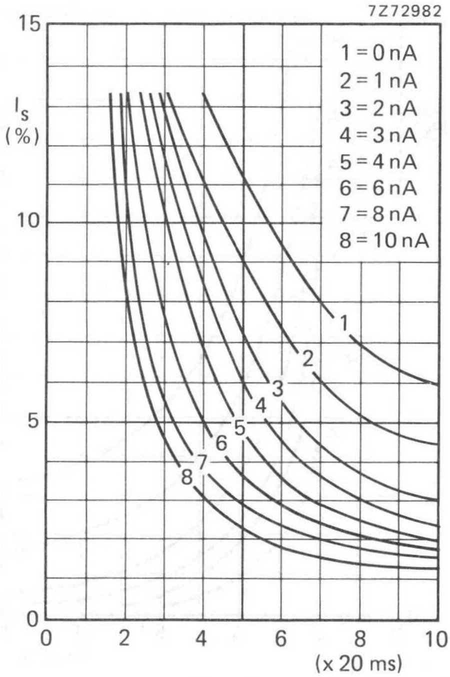

Fig. 14.

Decay lag (see note 9)

Light bias induced dark current as parameter.

Fig. 13 XQ1415L : I_s/I_b = 40/600 nA.

Fig. 14 XQ1413R, XQ1415R: I_s/I_b = 20/300 nA.

CAMERA TUBES

30 mm (1,2 inch) diameter Plumbicon ® television camera tubes, with high resolution lead-oxide photoconductive target, for use in high quality monochrome or colour cameras for broadcast; educational or industrial applications.

The XQ1520 series comprises the following versions:

XQ1520	for use in monochrome cameras
XQ1520L	for use in the luminance channel of colour cameras
XQ1520R	for use in the red channel
XQ1520G	for use in the green channel
XQ1520B	for use in the blue channel
XQ1523R	for use in the red channel; extended red response
XQ1525R	for use in the red channel; extended red response and IR filter
XQ1525L	for use in the luminance channel of colour cameras

Special features are:

- Anti-Comet-Tail (ACT) electron gun for highlight handling
- New photoconductive target for increased resolution
- Provisions for light bias to reduce lag

QUICK REFERENCE DATA

ACT electron gun		
Diameter		30 mm (1,2 inch)
Length	approx.	215 mm
Provided with anti-halation glass disc		
Focusing	magnetic	
Deflection	magnetic	
Useful target area (scanning area)		12,8 x 17,1 mm
Spectral response		
max. at	approx.	450 nm
cut-off: XQ1520	approx.	650 nm
XQ1523	approx.	850 to 950 nm
XQ1525	approx.	750 nm
Sensitivity		
XQ1520, XQ1520L	typ.	400 μA/lm
XQ1520R	typ.	80 μA/lmF
XQ1520G	typ.	170 μA/lmF
XQ1520B	typ.	40 μA/lmF
XQ1523R, XQ1525R	typ.	120 μA/lmF
XQ1525L	typ.	435 μA/lm
Resolution at 400 TV lines (5 MHz)		
XQ1520, XQ1520L	typ.	55 %
XQ1520R	typ.	50 %
XQ1520G	typ.	55 %
XQ1520B	typ.	60 %
XQ1523R, XQ1525R	typ.	55 %
XQ1525L	typ.	60 %
Heater		6,3 V, 190 mA

® Registered trademark for television camera tubes.

OPTICAL DATA

		notes
Quality rectangle on photoconductive target (aspect ratio 3 : 4)	12,8 x 17,1 mm	

Orientation of image on target:
For correct orientation of the image on the target the vertical scan should be essentially parallel to the plane passing through the tube axis and the marker line on the protecting sleeve at the base

Faceplate	
Thickness	1,2 ± 0,1 mm
Refractive index	n = 1,49
Anti-halation glass disc provided with anti-reflective coating	
Thickness	6 ± 0,2 mm
Refractive index	n = 1,52

XQ1525R and XQ1525L are provided with an infrared reflecting filter

ACCESSORIES

Socket	type 56602	
Deflection and focusing coil unit:		
Black/white	type AT1130S	
Colour	type AT1130T	
Mask for flare reduction	type 56029	
For adjustable light bias: lamp in holder	type 56106	1
Adapters for fixed light bias R tubes	type 56123	
Adapters for fixed light bias G, L tubes	type 56124	
Adapters for fixed light bias B tubes	type 56125	

ELECTRICAL DATA

Deflection		magnetic
Focusing		magnetic
Heating, indirect by a.c. or d.c.; parallel supply		
Heater voltage	V_f	6,3 V ± 5%
Heater current at V_f = 6,3 V	$I_{f\ nom.}$	190 mA
Heater current with light bias adapter		300 mA

The heater voltage must not exceed an r.m.s. value of 9,5 V. For optimum performance (lifetime and registration stability) stabilization of the heater voltage is recommended.

Capacitance		
Signal electrode to all	C_{as}	3 to 6 pF

This capacitance, which is effectively the output impedance, increases when the tube is inserted in the coil unit.

LIMITING VALUES (Absolute maximum rating system)

Unless otherwise stated, all voltages are referred to the cathode.

				notes
Signal electrode voltage	V_{as}	max.	50 V	
Grid 6 (mesh) voltage	V_{g6}	max.	1100 V	
Grid 5 (collector) voltage	V_{g5}	max.	800 V	
Voltage between grid 6 and grid 5	$V_{g6/g5}$	max.	350 V	
Grid 4 (limiter) and grid 2 (accelerator, first anode) voltage	$V_{g2,4}$	max.	350 V	
Grid 3 (auxiliary) voltage	V_{g3}	max.	350 V	
Grid 1 (control) voltage,				
positive	V_{g1}	max.	0 V	
negative	$-V_{g1}$	max.	200 V	
Cathode heating time before drawing cathode current	t_h	min.	1 min	
Cathode to heater voltage				
positive peak	V_{kfp}	max.	50 V	
negative peak	$-V_{kfp}$	max.	50 V	
Ambient temperature, storage and operation	T_{amb}	max. min.	50 °C −30 °C	
Faceplate temperature, storage and operation	T	max. min.	50 °C −30 °C	2
Faceplate illuminance	E	max.	500 lx	3

OPERATING CONDITIONS with ACT action 4, 5

For a scanned area of 12,8 x 17,1 mm. All voltages are specified with respect to the cathode potentional during the read-out mode, unless otherwise indicated. 6, 7, 8

Cathode voltage			
during read-out mode	V_k	0 V	
during ACT mode	V_k	0 to 15 V	
Signal electrode voltage	V_{as}	45 V	
Grid 6 (mesh) voltage	V_{g6}	675 V	
Grid 5 (collector) voltage	V_{g5}	600 V	
Grid 4 (limiter) and grid 2 (accelerator, or first anode) voltage	$V_{g2,4}$	300 V	
Grid 3 (auxiliary) voltage			
during read-out mode	V_{g3}		8
during ACT mode	V_{g3}		8
Grid 1 (control) voltage			
during read-out mode	V_{g1}		10
during ACT mode	V_{g1}		8
Blanking voltage on grid 1, peak	V_{g1p}	50 V	

notes

Typical beam current, signal current and pulse settings:

		XQ1520 XQ1520L XQ1525L	XQ1520R XQ1523R XQ1525R	XQ1520G	XQ1520B
Signal current, peak	I_{sp}	0,3	0,15	0,3	0,15 µA
Beam current, peak	I_{bp}	0,6	0,3	0,6	0,3 µA
ACT level, peak		0,4	0,2	0,4	0,2 µA
Cathode pulse	V_{kp}	7	3,5	7	3,5 V
Grid 1 pulse	V_{g1p}	27	23,5	27	23,5 V
Grid 3 pulse	V_{g3p}				see note 8

			notes
Faceplate illuminance		0 to 10 lx	11
Faceplate temperature		20 to 45 °C	2

ELECTRON GUN CHARACTERISTICS

			notes
Cut off			
Grid 1 voltage for cut-off at $V_{g2,4}$ = 300 V, without blanking or ACT pulses	V_{g1}	−40 to −110 V	
Blanking voltage, peak to peak at $V_{g2,4}$ = 300 V on grid 1	V_{g1p-p}	50 ± 10 V	12
Grids 2 and 4 current	$I_{g2,4}$	< 0,2 mA	13
Grids 3, 5 and 6 current	$I_{g3,5,6}$		13
Pulse timing and amplitude requirements (ACT)			7

PERFORMANCE

			notes
Dark current, without light bias	I_d	⩽ 1 nA	
Sensitivity at colour temperature of illuminance = 2856 K			14
XQ1520, XQ1520L	min. 365	typ. 400 µA/lm	
XQ1520R	min. 70	typ. 80 µA/lmF	
XQ1520G	min. 135	typ. 170 µA/lmF	
XQ1520B	min. 35	typ. 40 µA/lmF	
XQ1523R, XQ1525R	min. 110	typ. 120 µA/lmF	
XQ1525L	min. 390	typ. 435 µA/lmF	
Gamma of transfer characteristics		0,95 ± 0,05	
Light transfer characteristics with ACT		see Fig. 2	
Highlight handling		⩾ 5 lens stops	15
Spectral response, max. at	approx.	450 nm	
Spectral response, cut-off: XQ1520	approx.	650 nm	
Spectral response, cut-off: XQ1523	approx.	850 to 950 nm	
Spectral response, cut-off: XQ1525	approx.	750 nm	
Spectral response curves		see Figs 3, 4 and 5	

notes

Resolution 16

Modulation depth, i.e. uncompensated amplitude response at 400 TV lines at the centre of the picture. The figures shown represent the horizontal amplitude response as measured with a lens aperture f : 5,6.

Modulation transfer characteristics see Fig. 6

		XQ1520 XQ1520L	XQ1520R	XQ1520G	XQ1520B	XQ1523R XQ1525R	
Highlight signal current	I_s	300	150	300	150	150	nA
Beam current	I_b	600	300	600	300	300	nA
Modulation depth at 400 TV lines							
typ.		55	50	55	60	55	%
min.		50	40	50	50	45	%

Lag (typical values) 17

Light source with a colour temperature of 2856 K. Appropriate filter inserted in the light path for the chrominance tubes R, G and B

LOW KEY CONDITIONS (without light bias)

	build-up lag		decay lag	
	I_s/I_b = 20/300 nA		I_s/I_b = 20/300 nA	
	60 ms	200 ms	60 ms	200 ms
XQ1520, L, G	95%	~ 100%	9%	3%
XQ1520R	85%	~ 100%	13%	3,5%
XQ1520B	70%	~ 100%	15%	5,5%
XQ1523L	65%	~ 100%	15%	5%
XQ1525R	65%	~ 100%	15%	5%
XQ1525L	95%	~ 100%	10%	3%

LOW KEY CONDITIONS (with light bias) 18

Typical effect of light bias on build-up and decay lag under low key signal current and beam settings are shown in Figs 7 to 16.

Shading of light bias induced dark current 12,5% 18

MECHANICAL DATA

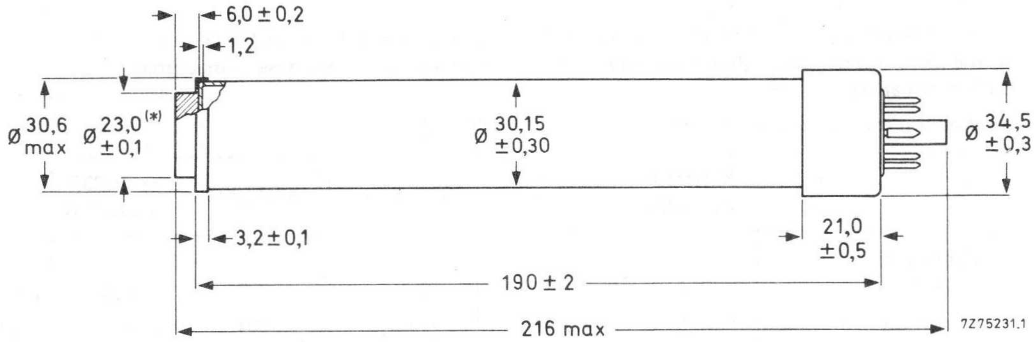

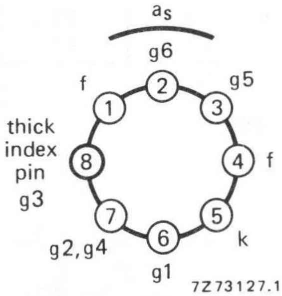

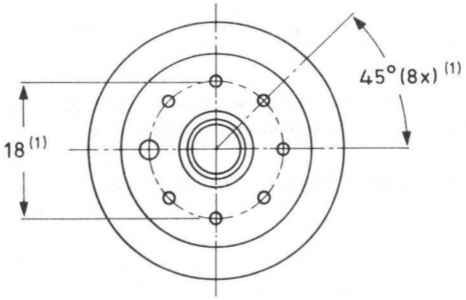

Mounting position: any

Mass: ≈ 100 g

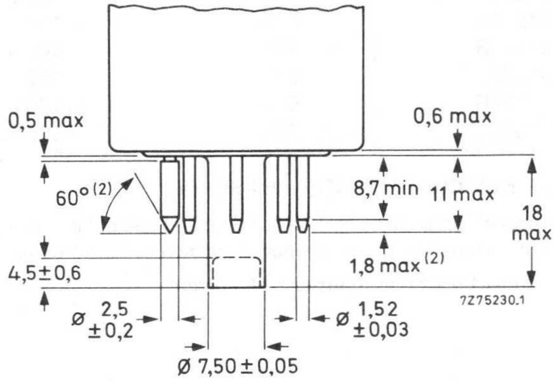

(*) Distance between axis of anti-halation glass disc and geometrical centre of signal electrode ring, measured in plane of faceplate: max. 0,2 mm. Total glass thickness: 7,2 ± 0,2 mm.

(1) The base passes a flat gauge with a centre hole 8,230 ± 0,005 mm diameter and holes for passing the pins with the following diameters: 7 holes of 1,690 ± 0,005 mm and one hole of 2,950 ± 0,005 mm. The holes may deviate max. 0,01 mm from their true geometrical position. Thickness of gauge 7 mm.

(2) The ends of the pins are tapered and/or rounded but not brought to a sharp point.

NOTES, see also General Section

1. a. **Adjustable light bias.** The light bias lamp assembly as supplied with each tube, type 56106, fits in the metal tube cemented to the pumping stem of the tube. The tube and the light bias lamp assembly will fit properly in the socket, type 56603. The wires should be connected to a source, capable of supplying max. 110 mA at 5 V.
   Considerations and recommendations for the choice of such a source, depending on the application, are supplied with each tube. The light bias lamp projects its light via a blue-green transmitting filter on the pumping stem where it is conducted to the target to cause a bias illumination. The desired amount of light bias can be obtained by adjusting the current through the filament of the lamp. See also note 18.
   b. **Fixed light bias.** An adapter is supplied with each tube, connecting a small lamp via a calibrated series resistor to the heater pins. The heater supply should be stabilized at 6,3 ± 0,1 V and be capable of supplying an additional current of 95 mA. The adapter is colour coded according to the application of the tube.
2. The tube can withstand short excursions up to 70 °C without damage or irreversible degradation in performance.
3. For short intervals. During storage the tube face shall be covered with the plastic hood provided; when the camera is idle the lens shall be capped, in stand-by also the beam will be cut-off.
4. The operating conditions and performance data quoted relate to operation of the tube in coil unit AT1130. See relevant data of deflection/focusing assemblies.
5. When the tube is to be used without ACT action, grid 3 should be connected to grids 2 and 4 and no ACT pulses should be applied to the cathode and grid 1. The performance of the tube will then be as described herein with the exception of the highlight handling.
6. a. For proper ACT action the d.c. voltage supply and/or pulse supply to the various electrodes should have sufficiently low impedance; see note 13.
   b. Video preamplifier: In the presence of highlights, peak signal currents of the order of 15 to 45 μA may be offered to the preamplifier during flyback. Special measures have to be taken in the preamplifier to prevent temporary overloading.
7. a. Read-out mode: Defined as the operating conditions during the active line scan (full line period-line blanking interval). For the CCIR system this will amount to 64 μs − 12 μs = 52 μs.
   b. ACT mode: Defined as the operating conditions during that part of the line blanking interval during which the ACT electrode gun is fully operative. The ACT interval is equal to or slightly within the line flyback time.
8. Pulse timing (CCIR) and amplitudes for ACT action: (blanking applied to grid 1, see note 12)
   a. For proper operation and setting up of the ACT electron gun three electrodes have to be pulsed:
      - Cathode: A positive-going pulse, V_{kp}, with an adjustable amplitude of 0 to 20 V. This pulse can be chosen to coincide with the camera blanking period (approx. 11 μs). The amplitude of this pulse determines the ACT cutting level and may in general be preset to 7; 3,5; 7 and 3,5 V, for black/white, R, G, and B application respectively. An amplitude of 20 V should be available to preset the I_s/I_b; see note 10.
      - Grid 1: A positive-going pulse, V_{g1p}, with such an amplitude that during the ACT mode the grid 1 bias is effectively reduced by 25 V, (V_{g1p} = 25 V + V_{kp}), to produce an extra amount of cathode current. The duration of this pulse should be so chosen that it is just within the flyback period (approx. 5 μs).

- Grid 3: A negative-going pulse, V_{g3p}, timing and duration coinciding with V_{g1p}, with: either an adjustable amplitude and superimposed on a fixed grid 3 voltage of 250 to 300 V, or with fixed amplitude and superimposed on an adjustable grid 3 voltage of 250 to 300 V, in either case, adjusted to result in a grid 3 voltage of 8,5 V with respect to the cathode voltage during the ACT mode. This pulse ensures that an adequate amount of beam current is drawn from the cathode current.

b. A suggested pulse timing and amplitude diagram is shown in Fig. 1.

9. Operation with ACT at $V_{g6} > 750$ V is not recommended since this may introduce dark current.

10. Adjusted with the ACT made inoperative, e.g. by setting the cathode pulse to 20 V. The control grid voltage is adjusted to produce a beam current just sufficient to allow a peak signal current of twice the typical value, I_{sp}, as observed and measured on a waveform oscilloscope. This amount of beam current is termed I_{bp}. I_b is set at 300 nA for R and B tubes and at 600 nA for L and G tubes.

    N.B. The signal current, I_s, and the beam current, I_b, conditions quoted with the performance figures for e.g. lag relate to measurements with an integrating instrument connected in the signal electrode lead and a uniform illuminance on the scanned area. The corresponding peak currents, I_{sp} and I_{bp}, as measured on a waveform oscilloscope will be a factor α larger.
    $\alpha = 100/100-\beta$; β being the total blanking time in %; for CCIR system $\alpha = 1{,}3$.

11. Typical faceplate illumination level for the XQ1520 and XQ1520L to produce 300 nA signal current will be approx. 3,5 lx. The signal currents stated for the colour tubes R, G and B will be obtained with an incident white light level (2856 K) on the filter of approx. 8,5 lx. These figures are based on the filters described in note 14. For filter BG12, however, a thickness of 1 mm is chosen.

12. Blanking can also be applied to the cathode:
    - without ACT action; required cathode pulse approx. 25 V
    - with ACT action; timing, polarity and amplitudes of the ACT pulses will have to be adapted.

13. The d.c. voltage supply and/or pulse supply to these electrodes should have a sufficiently low impedance to prevent distortion caused by the peak currents drawn during the ACT mode. These peak currents may amount to:

cathode	2 mA
grid 1	0 mA
grids 2 and 4	1 mA
grid 3	150 μA
grid 5	300 μA
grid 6	300 μA

The cathode impedance should preferably be chosen ⩽ 300 Ω.

14. Measuring conditions: illuminance level 4,54 lx at a colour temperature of 2856 K and the appropriate filter inserted in the light path. The signal current obtained in nA is a measure of the colour sensitivity expressed in μA per lumen of white light before the filter. Filters used are:

XQ1520R, XQ1525R	Schott	OG570	thickness	3 mm
XQ1520G	Schott	VG9	thickness	1 mm
XQ1520B	Schott	BG12	thickness	3 mm
XQ1523R	Schott	OG570	thickness	3 mm
	and Calflex	B1/K1		

For transmission curves see General Section.

15. With pulses applied as indicated in note 8 the tube will properly handle a highlight with a diameter of 10% of picture height and with a luminance corresponding to 32 times peak signal white, I_{sp}.

16. As measured with a 50 mm Leitz Summicron lens having a sine response of approximately 85% at 400 TV lines at f : 5,6 and the appropriate filter inserted in the light path. The horizontal amplitude response can be raised by means of suitable correction circuits, which affect neither the vertical resolution nor the limiting resolution.

17. **Build-up lag**

    After 10 s of darkness. The figures are typical percentages of the ultimate signal current obtained 60 ms and 200 ms, respectively, after the introduction of the illuminance.

    Decay lag

    After the target has been illuminated for at least 5 s. The figures represent typical signals in percentages of the original signal current 60 ms and 200 ms, respectively, after removal of the illuminance.

18. A reduction of lag, especially under low key conditions is obtained when light bias is applied. Infrared light with a wavelength > 600 nm in the light bias should be avoided.
    a. For monochrome operation a light bias corresponding to 4,5 nA dark current is usually adequate for excellent speed of response. The adapter as supplied with the tube will produce a fixed light bias in the order of this magnitude.
    b. *Adjustable* light bias (colour camera).

       In a colour camera the speeds of response of the tubes can be balanced by adjusting the amount of light bias per tube.

       In a 3-tube colour camera for instance it is recommended to first adjust the tubes to their normal highlight signal current and beam current settings and then point the camera at a dark scene comprising a metronome. The moving hand of the metronome carries a small white square.
       The illuminance should be chosen such that the square produces a peak signal of approximately 50 nA in the green chrominance channel.

       A maximum of 3 nA artificial dark current shall then be introduced in the green chrominance tube. Subsequently light bias shall be applied to the tubes in the red and blue channels until the lag of the three tubes is neutralized.
    c. *Fixed* light bias (colour camera).

       A typical setting for correct speeds of response in a 3-tube colour camera would be approximately 3 nA(p) (R), 2 nA(p) (G) and 3,5 nA(p) (B). The adapters as supplied with the tubes will produce fixed bias of the same magnitude.

19. Deviation of the level of any of the four corners, i.e. 10% inwards in H and V direction from the level in the picture centre. With the settings suggested in note 18 black shading compensation in the camera video processing amplifier will not normally be required. Further improvement in lag can be obtained by applying still higher light bias levels. It may then be necessary to use black shading compensation in the video processing amplifier.

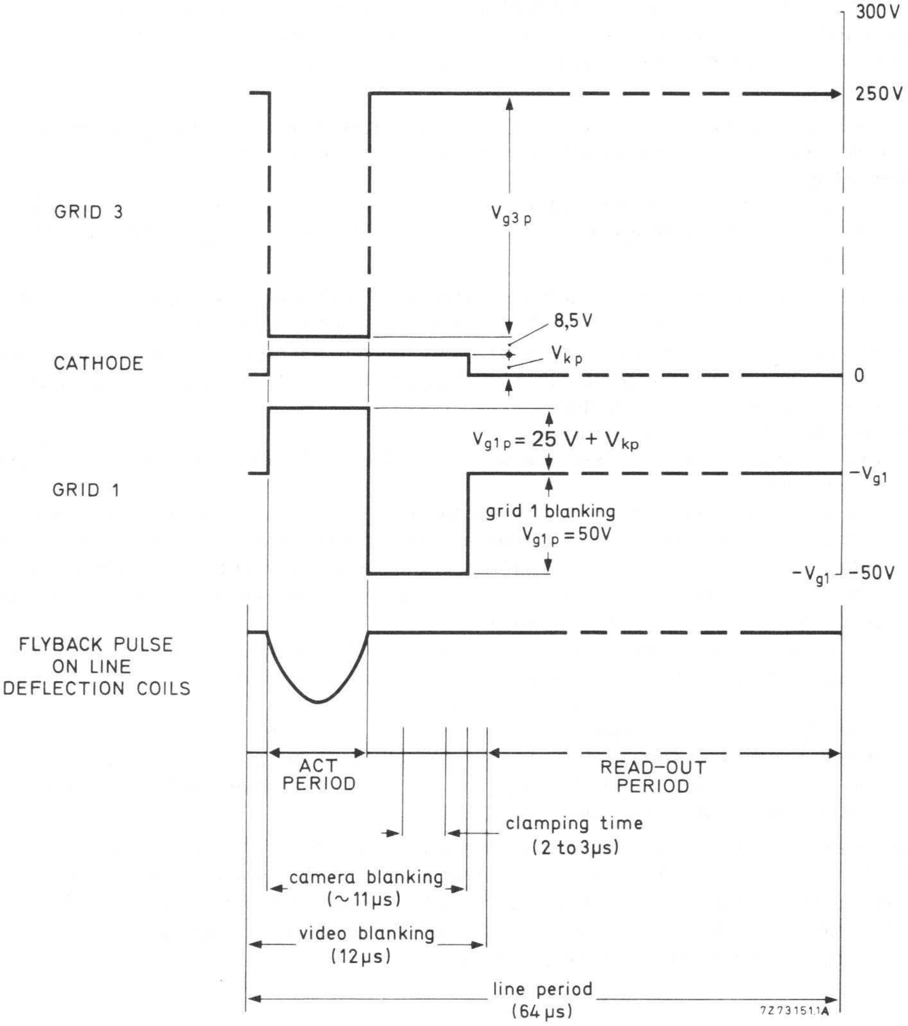
300 V
250 V
GRID 3
$V_{g3\,p}$
8,5 V
$V_{k\,p}$
CATHODE
0
$V_{g1\,p} = 25\ V + V_{kp}$
GRID 1
$-V_{g1}$
grid 1 blanking
$V_{g1\,p} = 50V$
$-V_{g1}$
-50V
FLYBACK PULSE
ON LINE
DEFLECTION COILS
ACT
PERIOD
READ-OUT
PERIOD
clamping time
(2 to 3μs)
camera blanking
(~11μs)
video blanking
(12μs)
line period
(64 μs)
7Z73151.1A

Fig. 1.

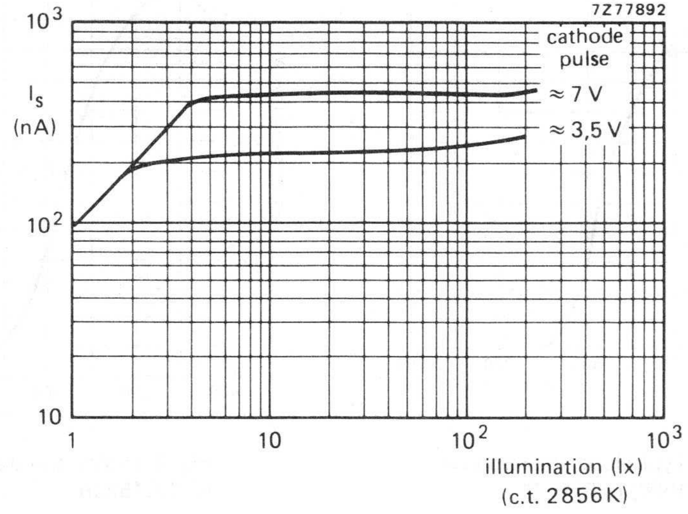

Fig. 2 Typical light transfer characteristics with ACT applied.

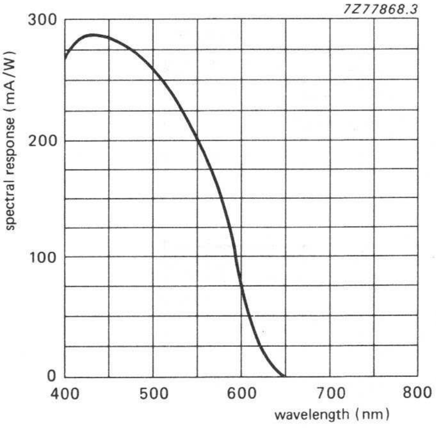

Fig. 3 Typical spectral response for XQ1520, L, R, G, B.

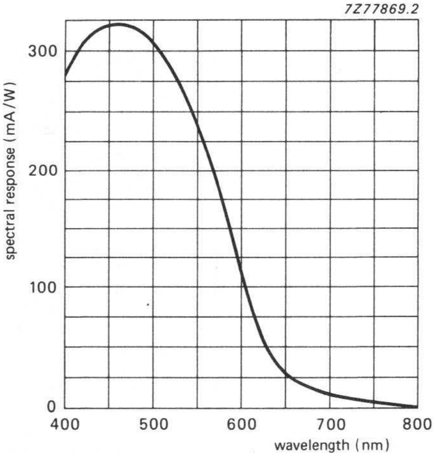

Fig. 4 Typical spectral response for XQ1523R.

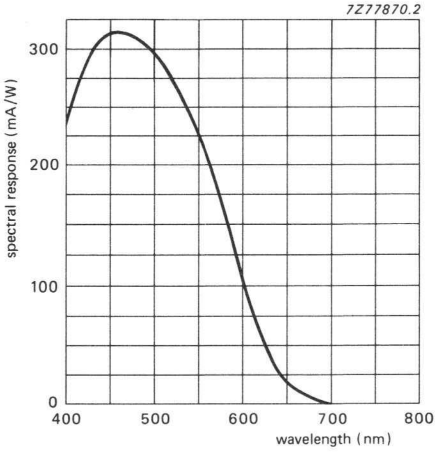

Fig. 5 Typical spectral response for XQ1525R.

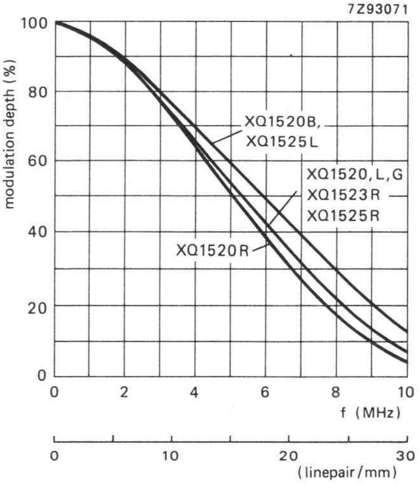

Fig. 6 Typical square-wave response curves.

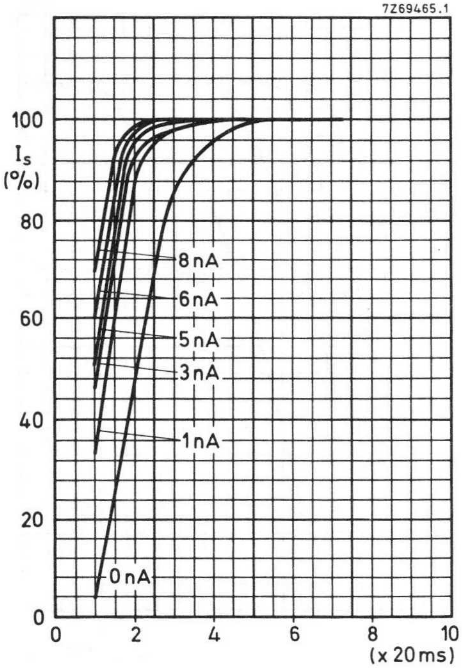

Fig. 7.

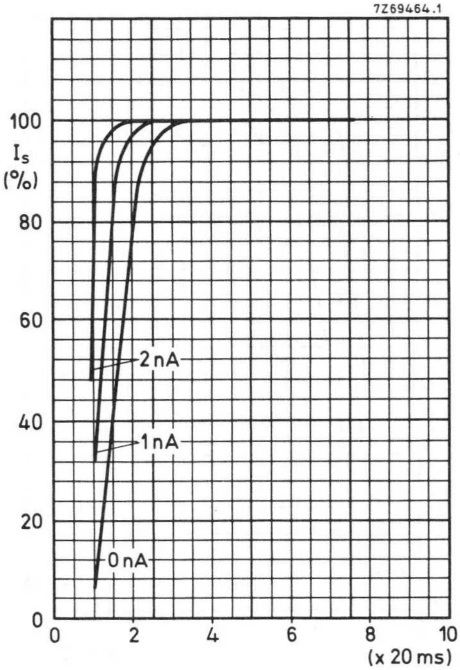

Fig. 8.

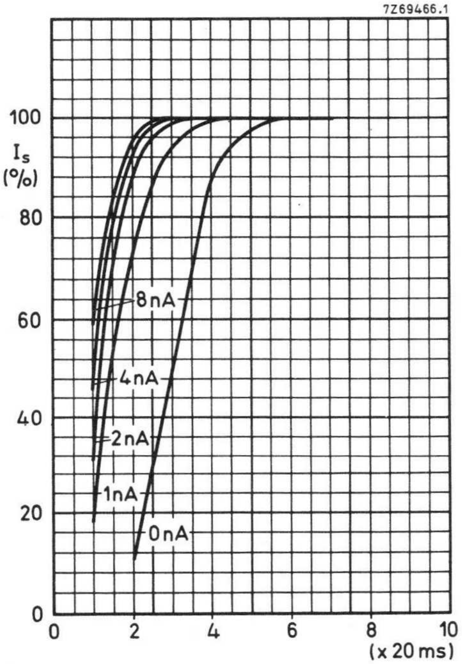

Build-up lag (note 17)

Light bias induced dark current as parameter.

Fig. 7, XQ1520R: I_s/I_b = 20/300 nA

Fig. 8, XQ1520, XQ1520L, XQ1520G: I_s/I_b = 40/600 nA

Fig. 9, XQ1520B: I_s/I_b = 20/300 nA

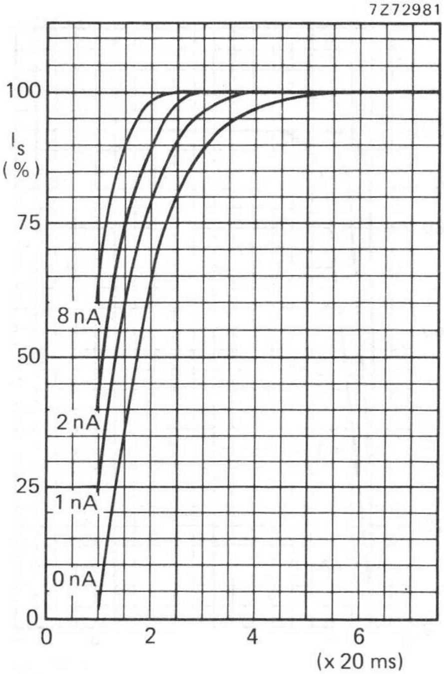

Fig. 10.

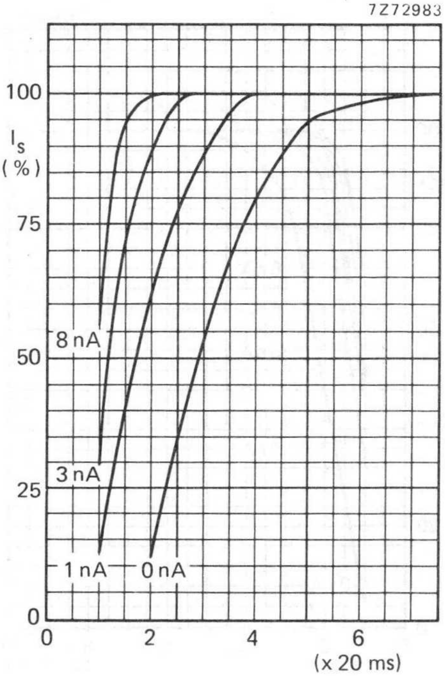

Fig. 11.

Build-up lag (see note 17)

Light bias induced dark current as parameter

Fig. 10, XQ1525L: I_s/I_b = 40/600 nA

Fig. 11, XQ1523R; XQ1525R: I_s/I_b = 20/300 nA

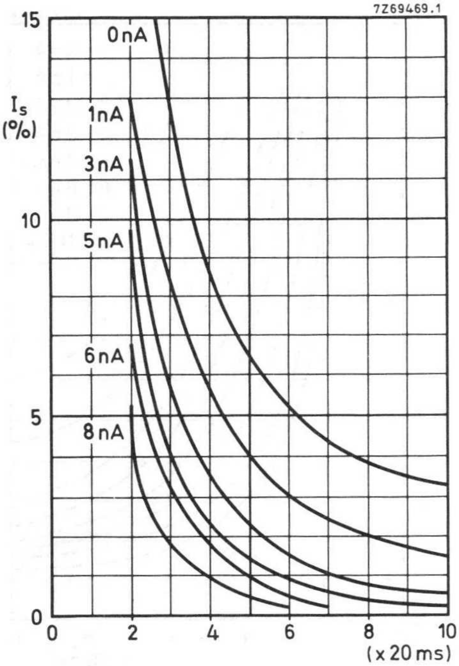

Fig. 12.

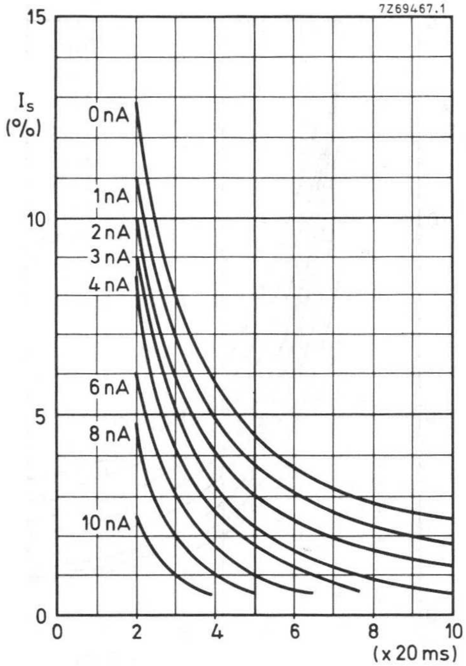

Fig. 13.

Decay lag (note 17)

Light bias induced dark current as parameter.

Fig. 12, XQ1520R: I_s/I_b = 20/300 nA.

Fig. 13, XQ1520, XQ1520L, XQ1520G: I_s/I_b = 40/600 nA.

Fig. 14, XQ1520B: I_s/I_b = 20/300 nA.

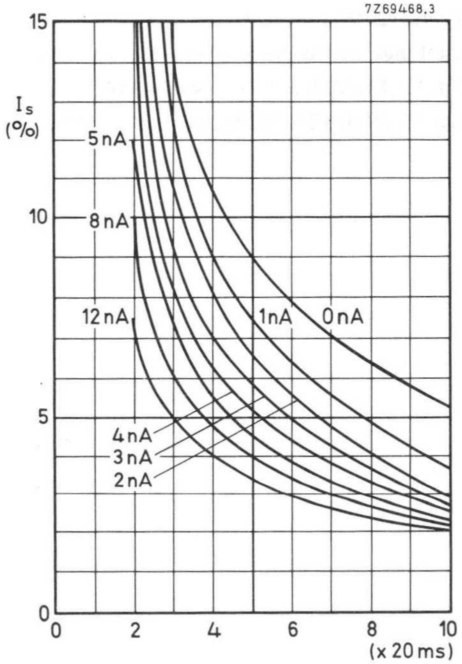

Fig. 14.

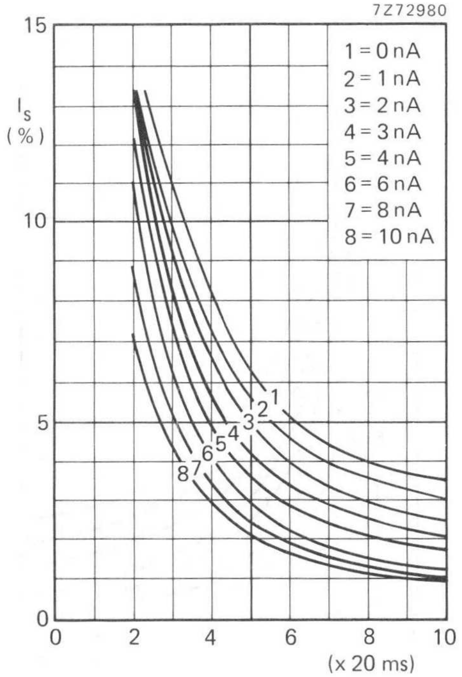

Fig. 15.

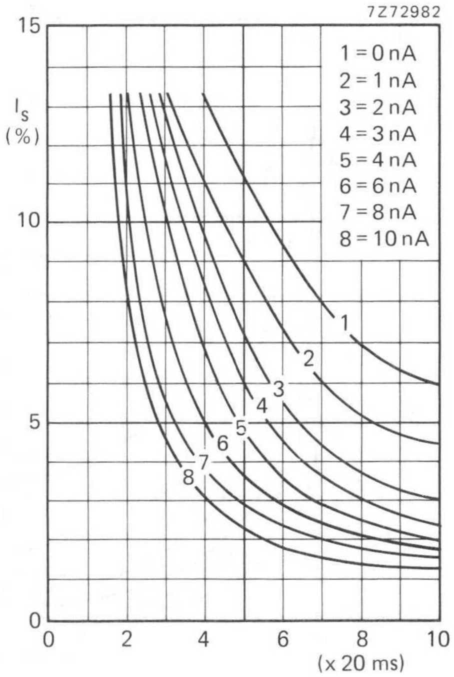

Fig. 16.

Decay lag (see note 17)

Light bias induced dark current as parameter

Fig. 15, XQ1525L: I_s/I_b = 40/600 nA

Fig. 16, XQ1523R; XQ1525R: I_s/I_b = 20/300 nA

CAMERA TUBES

30 mm (1,2 inch) diameter Plumbicon® television camera tubes, with high resolution lead-oxide photoconductive target, for use in high quality monochrome or colour cameras for broadcast, educational or industrial applications.

The XQ3440 series comprises the following versions:

XQ3440	for use in monochrome cameras
XQ3440L	for use in the luminance channel of colour cameras
XQ3440R	for use in the red channel
XQ3440G	for use in the green channel
XQ3440B	for use in the blue channel
XQ3443R	for use in the red channel; extended red response
XQ3445R	for use in the red channel; extended red response and IR filter

Special features are:

- New photoconductive target for increased resolution
- "Diode" electron gun with high beam reserve for dynamic beam control (DBC) to minimize comet-tailing and blooming (notes 1 and 2)
- Provisions for light bias to reduce lag
- Low output capacitance (LOC) for high signal to noise ratio

QUICK REFERENCE DATA

"Diode" electron gun		
Diameter		30 mm(1,2 inch)
Length	approx.	215 mm
Provided with anti-halation glass disc		
Focusing	magnetic	
Deflection	magnetic	
Useful target area (scanning area)		12,8 x 17,1 mm
Spectral response		
max. at	approx.	450 nm
cut-off: XQ3440	approx.	650 nm
XQ3443	approx.	850 to 950 nm
XQ3445	approx.	750 nm
Sensitivity		
XQ3440, XQ3440L	typ.	375 μA/lm
XQ3440R	typ.	80 μA/lmF
XQ3440G	typ.	150 μA/lmF
XQ3440B	typ.	36 μA/lmF
XQ3443R, XQ3445R	typ.	105 μA/lmF
Resolution at 400 TV lines (5 MHz)		
XQ3440, XQ3440L	typ.	65 %
XQ3440R	typ.	55 %
XQ3440G	typ.	65 %
XQ3440B	typ.	70 %
XQ3443R, XQ3445R	typ.	60 %
Heater		6,3 V, 190 mA

® Registered trademark for television camera tubes.

OPTICAL DATA

		notes
Quality rectangle on photoconductive target (aspect ratio 3 : 4)	12,8 x 17,1 mm	

Orientation of image on target:

For correct orientation of the image on the target the vertical scan should be essentially parallel to the plane passing through the tube axis and the marker line on the protecting sleeve at the base.

Faceplate	
Thickness	1,2 ± 0,1 mm
Refractive index	n = 1,49
Anti-halation glass disc	
Thickness	6 ± 0,2 mm
Refractive index	n = 1,52

XQ3445R is provided with an infrared reflecting filter

ACCESSORIES

Socket	type 56021	
Deflection and focusing coil unit, rear loading:		
Black/white	type AT1131S	
Colour	type AT1131T	
Mask for flare reduction	type 56029	
For adjustable light bias: lamp in holder	type 56106	3
Adapters for fixed light bias R tubes	type 56123	
Adapters for fixed light bias G, L tubes	type 56124	
Adapters for fixed light bias B tubes	type 56125	

ELECTRICAL DATA

Deflection		magnetic
Focusing		magnetic
Heating, indirect by a.c. or d.c.; parallel supply		
Heater voltage	V_f	6,3 V ± 5%
Heater current at V_f = 6,3 V	I_f nom.	190 mA

The heater voltage must not exceed an r.m.s. value of 9,5 V. For optimum performance (lifetime and registration stability) stabilization of the heater voltage is recommended.

Capacitance		
Signal electrode to all	C_{as}	approx. 3 pF

This capacitance, which is effectively the output impedance, increases when the tube is inserted in the coil unit.

LIMITING VALUES (Absolute maximum rating system)

Unless otherwise stated, all voltages are referred to the cathode.

				notes
Signal electrode voltage	V_{as}	max.	50 V	
Grid 4 voltage	V_{g4}	max.	1100 V	
Grid 3 voltage	V_{g3}	max.	800 V	
Voltage between grid 4 and grid 3	$V_{g4/g3}$	max.	350 V	
Grid 2 voltage	V_{g2}	max.	350 V	
Grid 1 voltage,				
positive	V_{g1}	max.	25 V	
negative	$-V_{g1}$	max.	200 V	
Grid 1 current (approx. I_k current)	I_{g1}	max.	7 mA	
Grid 1 current (peak current with DBC)	I_{g1p}	max.	10 mA	
Cathode to heater voltage				
positive peak	V_{kfp}	max.	50 V	
negative peak	$-V_{kfp}$	max.	50 V	
Cathode heating time before drawing cathode current	t_h	min.	1 min	
External resistance between cathode and heater at $V_{kfp} > 10$ V	R_{kf}	min.	2 kΩ	
Ambient temperature, storage and operation	T_{amb}	max.	50 °C	4
		min.	−30 °C	
Faceplate temperature, storage and operation	T	max.	50 °C	
		min.	−30 °C	
Faceplate illuminance	E	max.	500 lx	5

OPERATING CONDITIONS with ACT action

				notes
				6
For a scanned area of 12,8 x 17,1 mm				
Cathode voltage	V_k		0 V	
Signal electrode voltage	V_{as}		45 V	
Beam current	I_b	max.	600 nA	7
Grid 4 voltage	V_{g4}		675 V	
Grid 3 voltage	V_{g3}		600 V	
Grid 2 voltage	V_{g2}		300 V	
Grid 1 voltage for I_b = 600 nA	V_{g1}		+ 8 V	7
Blanking voltage on grid 1, peak to peak	V_{g1p-p}		25 V	
Faceplate illuminance			0 to 10 lx	8
Faceplate temperature			20 to 45 °C	

ELECTRON GUN CHARACTERISTICS

Cut-off			
Grid 1 voltage for cut-off at V_{g2} = 300 V, without blanking	V_{g1}		−10 to 0 V
Grid 1 voltage for normal beam setting	V_{g1w}	≤	15 V
Blanking voltage, peak to peak			
on grid 1	V_{g1p-p}		25 V
on cathode	V_{kp-p}		25 V
Grid 1 current at normally required beam currents	I_{g1}	≤	5 mA
Grid 2 current at normally required beam currents	I_{g2}	≤	0,25 mA

PERFORMANCE

						notes
Dark current						
XQ3440	I_d		≤	1	nA	
XQ3443, XQ3445	I_d		≤	2	nA	
Sensitivity at colour temperature of illuminance = 2856 K						9
XQ3440	min.	330	typ.	375	μA/lm	
XQ3440R	min.	70	typ.	80	μA/lmF	
XQ3440G	min.	120	typ.	150	μA/lmF	
XQ3440B	min.	32	typ.	36	μA/lmF	
XQ3443R, XQ3445R	min.	70	typ.	105	μA/lmF	
Gamma of transfer characteristic				0,95 to 0,05		
Spectral response, max. at	approx.			450	nm	
Spectral response, cut-off at	approx.			650 to 950	nm	
Spectral response curves	see Figs 1, 2 and 3					
Resolution						10

Modulation depth, i.e. uncompensated amplitude response at 400 TV lines at the centre of the picture.

		XQ3440 XQ3440L XQ3440G	XQ3440R	XQ3443R XQ3445R	XQ3440B	
Highlight signal current	I_s	300	150	150	150	nA
Beam current	I_b	600	300	300	300	nA
Modulation depth at 400 TV lines						
typ.		65	55	60	70	%
min.		55	45	50	60	%

Modulation transfer characteristics: see Fig. 4

Lag (typical values, without light bias)	11, 12

Light source with a colour temperature of 2856 K. Appropriate filter inserted in the light path.

	build-up lag		decay lag	
	I_s/I_b = 20/300 nA		I_s/I_b = 20/300 nA	
	60 ms	200 ms	60 ms	200 ms
XQ3440, XQ3440L	95%	~ 100%	9%	3%
XQ3440R	85%	~ 100%	13%	3,5%
XQ3440G	95%	~ 100%	10%	3%
XQ3440B	70%	~ 100%	13%	5,5%
XQ3443R	90%	~ 100%	15%	3%
XQ3445R	90%	~ 100%	15%	4%

Shading of light bias induced dark current	12,5%	13
Highlight handling capability with DBC 4 lens stops		14

MECHANICAL DATA

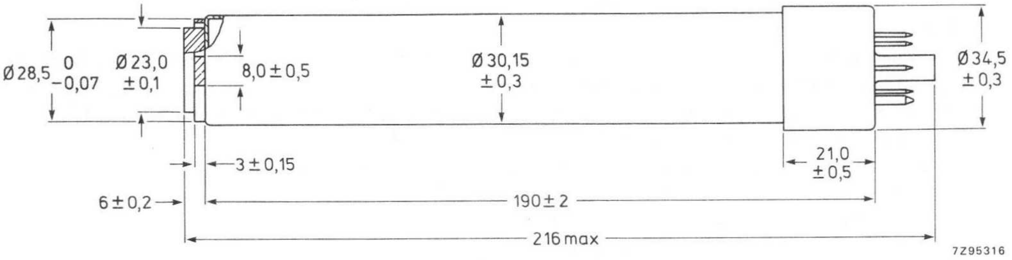

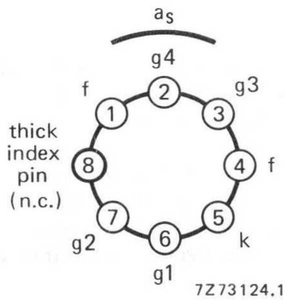

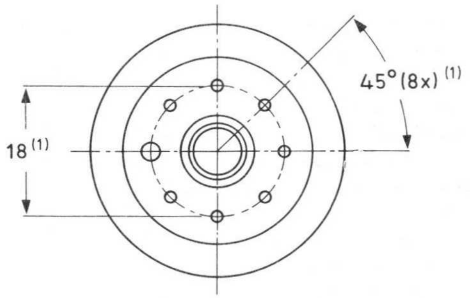

Mounting position: any

Mass: ≈ 100 g

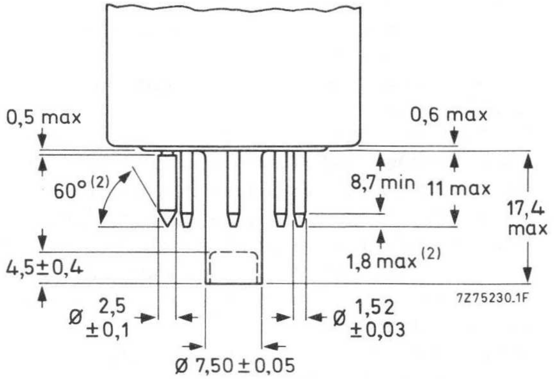

(*) Distance between axis of centring ring and geometrical centre of mesh electrode ring, measured in plane of faceplate: max. 0,1 mm. Total glass thickness: 7,2 ± 0,2 mm.

(1) The base passes a flat gauge with a centre hole 8,230 ± 0,005 mm diameter and holes for passing the pins with the following diameters: 7 holes of 1,690 ± 0,005 mm and one hole of 2,950 ± 0,005 mm. The holes may deviate max. 0,01 mm from their true geometrical position. Thickness of gauge 7 mm.

(2) The ends of the pins are tapered and/or rounded but not brought to a sharp point.

NOTES, see also General Section

1. "Diode" electron gun is a triode gun operating in a diode mode, providing a very high beam reserve. Since the "Diode" gun operates with a positive grid 1 voltage, causing some grid current, cameras designed around XQ1410 tubes will require modification.

   N.B.

   Avoid continuous operation at high beam currents since this will shorten tube life. Full advantage of the high beam reserve to reduce comet-tailing and blooming can be made with DBC circuitry which, during highlights, feeds positive-going pulses derived from the video signal to grid 1, to increase the beam current momentarily.
2. The "diode" gun operates with a positive ($\leqslant$ 15 V) grid 1 voltage (adjusted for correct beam settings, see note 7), hence draws some grid 1 current:

   without DBC: $\leqslant$ 5 mA (peak) with blanking

   with DBC: $\leqslant$ 10 mA (peak) with blanking measured with oscilloscope.

   The DBC circuitry should, in the case of highlights, supply positive-going pulses of 10 V above V_{g1w} (see note 7) and up to 10 mA peak to grid 1.

   N.B.

   Applying higher pulses than 10 V is not recommended since this will shorten tube life, impair resolution and may introduce oscillations.
3. a. **Adjustable light bias.** The light bias lamp assembly as supplied with each tube, type 56106, fits in the metal tube cemented to the pumping stem of the tube. The tube and the light bias lamp assembly will fit properly in the socket, type 56021. The wires should be connected to a source, capable of supplying max. 110 mA at 5 V.

   Considerations and recommendations for the choice of such a source, depending on the application, are supplied with each tube. The light bias lamp projects its light via a blue-green transmitting filter on the pumping stem where it is conducted to the target to cause a bias illumination. The desired amount of light bias can be obtained by adjusting the current through the filament of the lamp. See also note 12.

   b. **Fixed light bias.** An adapter is supplied with each tube, connecting a small lamp via a calibrated series resistor to the heater pins. The heater supply should be stabilized at 6,3 ± 0,1 V and be capable of supplying an additional current of 95 mA. The adapter is colour coded according to the application of the tube.
4. The tube can withstand short excursions up to 70 °C without damage or irreversible degradation in performance.
5. For short intervals. During storage the tube face shall be covered with the plastic hood provided; when the camera is idle the lens shall be capped, in stand-by also the beam will be cut-off.
6. The operating conditions and performance data quoted relate to operation of the tube in coil unit AT1131. See relevant data of deflection/focusing assemblies.
7. The beam current I_b, as obtained by adjusting the control grid (grid 1) voltage is set to 300 nA for R and B tubes, 600 nA for black and white, L and G tubes. I_b is not the actual current available in the scanning beam, but is defined as the maximum amount of signal current, I_s, that can be obtained with this beam.

   In the performance figures for lag, the signal current and beam current conditions are given, e.g. as I_s/I_b = 20/300 nA. This means: with a signal current of 20 nA and a beam setting which just allows a signal current of 300 nA.

   The signal currents are measured with an integrating instrument connected in the signal electrode lead and a uniform illumination of the scanned area.

   The peak signal currents as measured on a waveform oscilloscope will be a factor α larger.

   $\alpha = 100/100\text{-}\beta$;

   β being the total blanking time in %, for the CCIR system α = 1,3.

8. Typical faceplate illumination level for the XQ3440 and XQ3440L to produce 300 nA signal current will be approx. 3,5 lx. The signal currents stated for the colour tubes R, G and B will be obtained with an incident white light level (2856 K) on the filter of approx. 9 lx. These figures are based on the filters described in note 9. For filter BG12, however, a thickness of 1 mm is chosen.

9. Measuring conditions: illuminance level 4,54 lx at a colour temperature of 2856 K and the appropriate filter inserted in the light path. The signal current obtained in nA is a measure of the colour sensitivity expressed in μA per lumen of white light before the filter. Filters used are:

XQ3440R, XQ3445R	Schott	OG570	thickness	3 mm
XQ3440G	Schott	VG9	thickness	1 mm
XQ3440B	Schott	BG12	thickness	3 mm
XQ3443R	Schott	OG570	thickness	3 mm
	and Calflex	B1/K1		

For transmission curves see General Section.

10. As measured with a 50 mm Leitz Summicron lens having a sine response of approximately 85% at 400 TV lines at f : 5,6 and the appropriate filter inserted in the light path. The horizontal amplitude response can be raised by means of suitable correction circuits, which affect neither the vertical resolution nor the limiting resolution.

11. **Build-up lag**

After 10 s of darkness. The figures are typical percentages of the ultimate signal current obtained 60 ms and 200 ms, respectively, after the introduction of the illuminance.

Decay lag

After the target has been illuminated for at least 5 s. The figures represent typical signals in percentages of the original signal current 60 ms and 200 ms, respectively, after removal of the illuminance.

12. A reduction of lag, especially under low key conditions is obtained when light bias is applied. Infrared light with a wavelength > 600 nm in the light bias should be avoided.

    a. For monochrome operation a light bias corresponding to 5 nA dark current is usually adequate for excellent speed of response.

    b. In a colour camera the speeds of response of the tubes can be balanced by adjusting the amount of light bias per tube.

    In a 3-tube colour camera for instance it is recommended to first adjust the tubes to their normal highlight signal current and beam current settings and then point the camera at a dark scene comprising a metronome. The moving hand of the metronome carries a small white square. The illuminance should be chosen such that the square produces a peak signal of approximately 50 nA in the green chrominance channel. A maximum of 3 nA artificical dark current shall then be introduced in the green chrominance tube. Subsequently light bias shall be applied to the tubes in the red and blue channels until the lag of the three tubes is neutralized.

13. Deviation of the level of any of the four corners, i.e. 10% inwards in H and V direction from the level in the picture centre. With the settings suggested in note 12 black shading compensation in the camera video processing amplifier will not normally be required. Further improvement in lag can be obtained by applying still higher light bias levels. It may then be necessary to use black shading compensation in the video processing amplifier.

14. a. With DBC applied (see note 2) the tube will properly handle highlights with a diameter of 10% of the picture height and with a brightness corresponding to 16 times peak signal white, I_{sp}.

    b. The maximum peak signal currents in the case of highlights will be 2,5 μA. Video preamplifiers should be designed to accomodate these.

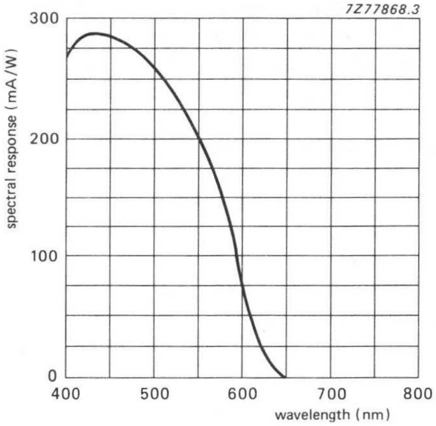

Fig. 1 Typical spectral response for XQ3440, L, R, G, B.

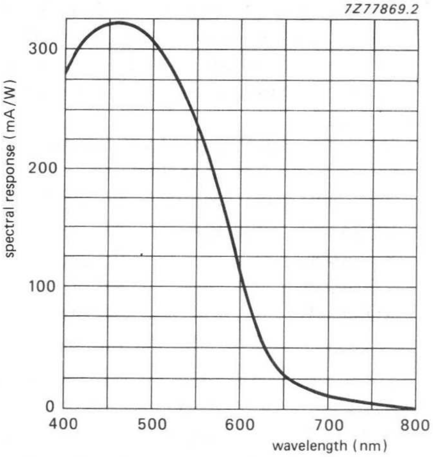

Fig. 2 Typical spectral response for XQ3443R.

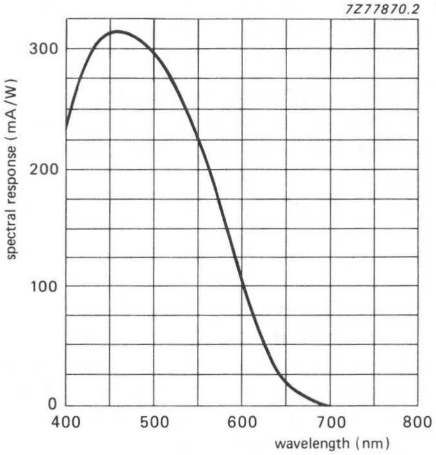

Fig. 3 Typical spectral response for XQ3445R.

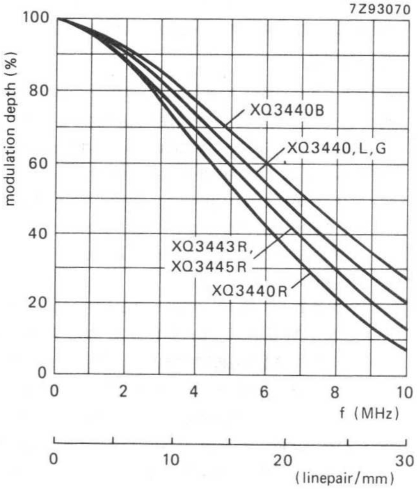

Fig. 4 Typical square wave response curves.

CAMERA TUBE

30 mm/45 mm diameter, Plumbicon® television camera tube with very high resolution lead-oxide photoconductive target, exclusively intended for use with X-ray image intensifiers in medical equipment.
Special features are:

- Large scan area,
- New photoconductive target for increased resolution,
- "Diode" electron gun for high beam reserve, improved beam acceptance, low lag,
- Low output capacitance for high signal-to-noise ratio.

QUICK REFERENCE DATA

"Diode" electron gun	notes 1, 2
Diameter	47 mm/30 mm
Length	≈ 216 mm
Focusing	magnetic
Deflection	magnetic
Useful target area; circle, diameter	26 mm
Spectral response	
max. at	≈ 500 nm
cut-off at	≈ 850 to 950 nm
Sensitivity, typ.	115 μA/lmF
Modulation depth at 400 TV lines (5 MHz)	95%
Heater	6,3 V, 190 mA

OPTICAL DATA

		notes
Dimensions of quality area of target, circle of 26 mm diameter		3
Orientation of image on target.		
For correct orientation of the image on the target the vertical scan should be essential parallel to the plane through the tube axis and the index pin.		
Faceplate		
Thickness	3 mm	
Refractive index	1,49 mm	
Anti halation glass disc		
Thickness	8 mm	
Refractive index	1,52 mm	

ACCESSORIES

Socket	type 56021
Deflection and focusing coil unit	type AT1107/01

® Registered Trade Mark for TV camera tube.

ELECTRICAL DATA

DEFLECTION	magnetic
FOCUSING	magnetic

HEATING

Indirect by a.c. or d.c.

Heater voltage	V_f	6,3 V ± 5 %
Heater current, nom.	I_f	190 mA

The heater voltage must never exceed 9,5 V (r.m.s.). For optimum performance stabilization of the heater voltage is recommended.

CAPACITANCE

				notes
Signal electrode to all, typ.	C_{as}	5	pF	

This capacitance increases when the tube is inserted in the coil unit.

LIMITING VALUES (Absolute maximum rating system)

All voltages are referred to the cathode, unless otherwise stated.

Signal electrode voltage	V_{as}	max.	50	V	
Grid 4 (mesh) voltage	V_{g4}	max.	1100	V	
Grid 3 voltage	V_{g3}	max.	800	V	
Voltage between grid 4 and grid 3	V_{g4}/V_{g3}	max.	450	V	5
Grid 2 voltage	V_{g2}	max.	350	V	
Grid 1 voltage positive	V_{g1}	max.	20	V	
Grid 1 voltage negative	$-V_{g1}$	max.	125	V	
Grid 1 current (≈ cathode current)	I_{g1}	max.	10	mA	4
Cathode to heater voltage, positive peak	V_{kfp}	max.	50	V	
Cathode to heater voltage, negative peak	$-V_{kfp}$	max.	125	V	
Cathode heating time before drawing cathode current	t_h	min.	1	min	
External resistance between cathode and heater at $V_{kf} > 10$ V	R_{kf}	min.	2	kΩ	
Ambient temperature, storage and operation	T_{amb}	max. min.	50 −30	°C °C	6
Faceplate temperature, storage and operation	T	max. min.	50 −30	°C °C	
Faceplate illuminance	E	max.	500	lx	

OPERATING CONDITIONS AND PERFORMANCE

Conditions

					notes
Cathode voltage	V_k		0	V	
Signal electrode voltage	V_{as}		45	V	
Beam current	I_b				8, 9
Grid 4 voltage	V_{g4}		960	V	5
Grid 3 voltage	V_{g3}		600	V	5
Grid 2 voltage	V_{g2}		300	V	
Grid 1 voltage	V_{g1}		0 to 20	V	
Blanking voltage on grid 1, peak-to-peak	$V_{g1p\text{-}p}$		25	V	
Focusing and deflection coil currents					10
Faceplate illuminance	E		0 to 10	lx	
Faceplate temperature	T_{as}		20 to 40	°C	

ELECTRON GUN CHARACTERISTICS

Cut-off					
Grid 1 voltage for cut-off at V_{g2} = 300 V without blanking	V_{g1}		−10 to 0	V	
Grid 1 voltage for normal beam current	V_{g1w}		9	V	
Blanking voltage with respect to V_{g1w}, peak-to-peak, on grid 1	$V_{g1p\text{-}p}$		25	V	
on cathode	$V_{kp\text{-}p}$		25	V	
Grid 1 current at normally required beam currents	I_{g1}	$\leqslant$	5	mA	
Grid 2 current at normally required beam currents	I_{g2}	$\leqslant$	0,1	mA	

Performance

Dark current	I_d	$\leqslant$	3	nA	
Sensitivity at colour temperature of 2856 K		typ.	115	μA/lmF	11
Sensitivity with P20 light source		typ.	350	μA/lm	
Peak signal current with E = 1 lx (P20)	I_{sp}	typ.	420	nA	12
Peak signal current (26 mm dia.)			3500	nA	
Spectral response: max. response at		≈	500	nm	
Spectral response: cut-off at		850 to 950		nm	
Spectral response curve	see Fig. 2				
Gamma of transfer characteristic		0,95 ± 0,05			

Resolution notes

Modulation depth, i.e. uncompensated amplitude response at 400 TV lines at centre of the picture.

	XQ4502/A
Highlight signal current I_s	400 nA
Beam current I_b	800 nA
Modulation depth at 400 TV lines (5 MHz) in % typ.	95
min.	90

Limiting resolution	2500 TV lines	
Modulation transfer characteristic	see Fig. 5	13
Lag (typical values, no light bias applied)		8,14,15,16

Light source with a colour temperature of 2856 K. Appropriate filter inserted in light path.

Low key conditions (percentage) see Figs 3 and 4

MECHANICAL DATA

Dimensions in mm

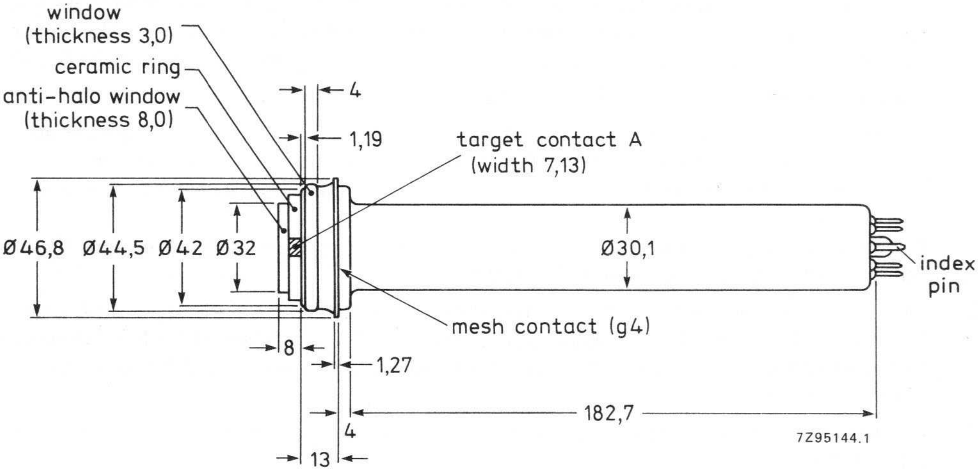

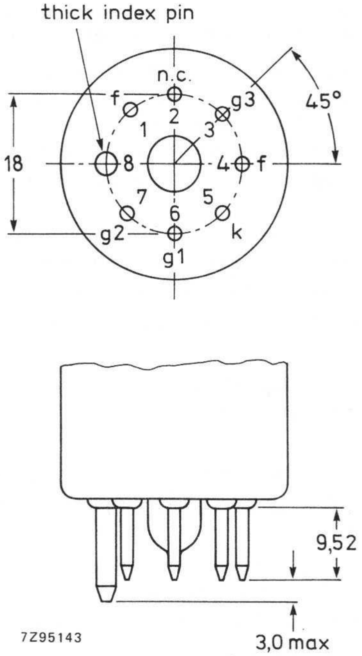

Mounting position: any

Mass ≈ 125 g

NOTES, see also General Section

1. Diode Gun is a triode gun operating in a diode mode, providing a very high beam reserve. Continuous operation with a high beam setting is to be avoided since this will shorten tube life. High I_b settings should be used under high light intensity conditions only, such as pulsed mode and rad mode. All other modes of operation should use normal I_b settings or have beam cut off.
2. The Diode Gun requires a positive grid 1 voltage, and draws some grid current.
3. Underscanning of the specified target area (26 mm diam.), or failure of scanning, should be avoided since damage to the target may occur. Cathode blanking should be used to provide a circular image. Video blanking could cause beam to scan mesh ring, with possible consequent degradation of tube life.
4. A current limiter must be incorporated to limit total cathode current to 10 mA maximum. Camera design should allow for 10 mA operation.
5. The optimum voltage ratio V_{g4}/V_{g3} to minimize beam landing errors (preferable < 1 V) depends on the type of coil used. For type AT1107/01, a ratio of 1,6 is recommended. Under no circumstances should grid 4 (mesh) be allowed to operate at a voltage below that of grid 3 as this may damage the target.
6. The tube can withstand short excursions to 70 ^{o}C without any damage or irreversible degradation in performance.
7. This rating is for short intervals only. During storage the tube must be covered (a plastic hood is provided for this purpose) and when the camera is idle the lens must be capped. **If camera is in standby operation, the lens must be capped and the beams turned off.**
8. The beam current I_b, as obtained by adjusting the control grid voltage (grid 1), is set at 800 nA. I_b is not the total current available in the scanning beam, but is defined as the maximum amount of signal current, I_s, with this particular beam setting. In the performance figures, e.g. for resoltuion and lag, the signal current and beam current conditions are given e.g. as I_s/I_b = 400/800 nA. This means: with signal current of 400 nA and a beam setting which just allows a signal current of 800 nA.

   N.B. The signal currents are measured with an integrating instrument connected in the signal electrode lead and a uniform illumination of the scanned area. The peak signal currents as measured on a waveform oscilloscope will be a factor α larger. See note 12.
9. The maximum peak signal which the XQ4502 can handle is 4 μA. Video amplifiers should be designed to accommodate this.
10. See published data of deflection/focusing assemblies. The direction of the current through the focusing coil should be cosen such that a north-seeking pole will be attracked at the faceplate end of the coil.
11. Measuring conditions: Illuminance level 3,1 lx at colour temperature of 2856 K. Filters Schott VG9 (1 mm) and Calflex B1/K1 inserted in the light path. For transmission curves see General Section.
12. The peak signal currents are measured on a waveform oscilloscope and with a uniform illumination on the 26 mm ϕ target area. When measured with an integrating instrument connected in the signal-electrode lead the average signal currents will be smaller:

   a. By a factor α ($\alpha = \frac{100-\beta}{100}$), β being the total blanking time in %: for the CCIR system α amounts to 0,75.

   b. By a factor δ, δ being the ratio of the active target area (circle with 26 mm ϕ) to the area which would correspond with the adjusted scanning amplitudes (26 mm x 34,6 mm) this ratio amounts to δ = 0,59.

   The total ratio of integrated signal current, I_s, to the peak signal current, I_{sp}, amount to $\alpha \times \delta = 0{,}44$.

13. As measured with a 50 mm Leitz Summicron lens having a sine response of approximately 96% at 8 lp/mm (400 TV lines at 26 mm dia.) at f : 5,6. The published 95% typ. is uncorrected. Tube resolution is higher.
    The horizontal amplitude response can be raised by means of suitable correction circuits, which affect neither the vertical resolution nor the limiting resolution.
14. Measured with 100 nA signal current and a beam current just sufficient to stabilize a signal current of 800 nA.
15. *Build-up lag.* After 10 seconds of complete darkness. Values and curves shown relating to build-up lag represent the typical percentages of the ultimate signal obtained as a function of time, after the illumination has been applied.
16. *Decay lag.* After a minimum of 5 seconds of illumination of the target. Values and curves shown relating to decay lag represent the residual signal currents in percentages of the original signal current as a function of time, after the illumination has been removed.

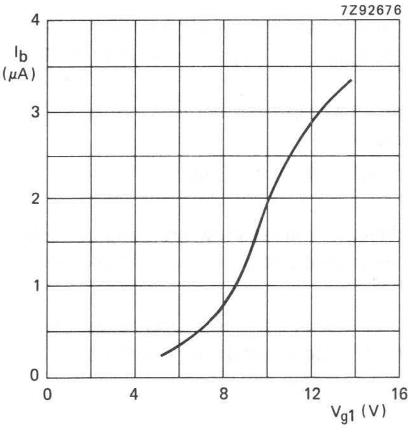

Fig. 1 Beam current versus grid 1 voltage, typical, see note 9.

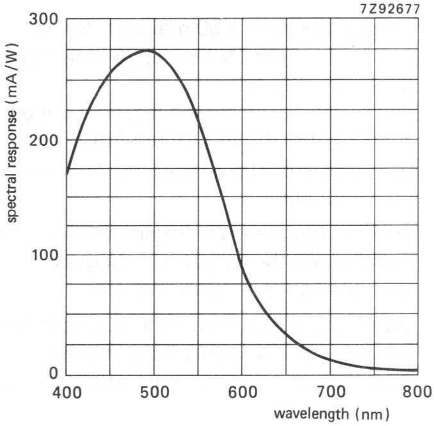

Fig. 2 Typical spectral response.

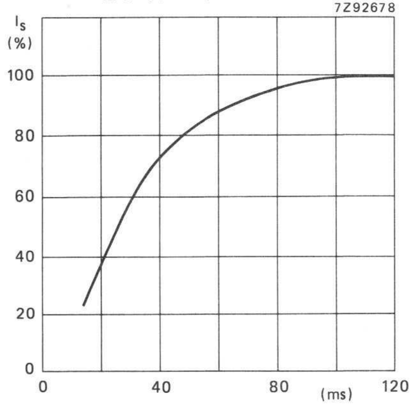

Fig. 3 Build-up lag, I_s/I_b = 100/800 nA without bias light. (Lag can be improved by using bias light).

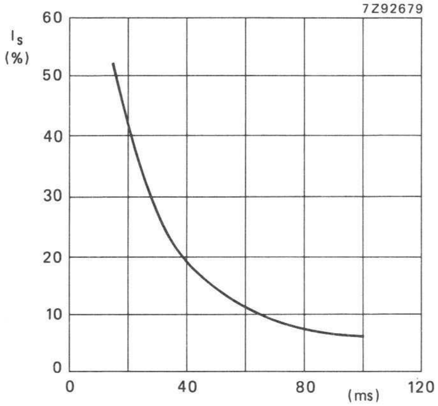

Fig. 4 Decay lag, I_s/I_b = 100/800 nA without bias light. (Lag can be improved by using bias light).

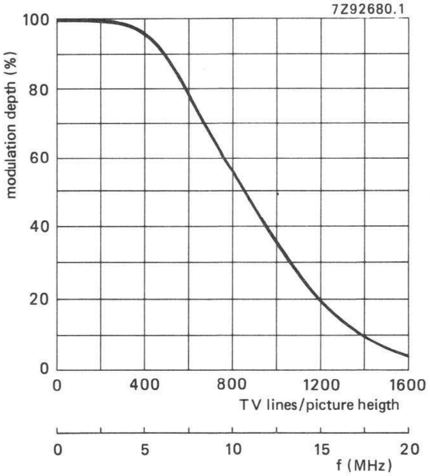

Fig. 5 Typical square wave response curve.

25,4 mm dia. PLUMBICON TUBES

CAMERA TUBES

25,4 mm (1 in) diameter Plumbicon® television camera tubes, with standard resolution lead-oxide photoconductive target, for use in high quality monochrome or colour cameras for broadcast, educational or industrial applications.

The XQ1070 series comprises the following front loading versions:

XQ1070	for use in monochrome cameras
XQ1070L	for use in the luminance channel of colour cameras
XQ1070R	for use in the red channel
XQ1070G	for use in the green channel
XQ1070B	for use in the blue channel
XQ1071	as XQ1070 series; only difference being the degree of freedom from blemishes on the target (industrial quality tubes)
XQ1073R	for use in the red channel; extended red response
XQ1074	as XQ1073. Industrial grade
XQ1075R	for use in the red channel; extended red response and IR filter
XQ1076	as XQ1075. Industrial grade

Mechanical variants of the XQ1070 series are also available. Such variants are defined by a suffix as follows:

XQ . . . ./02, R, G, B, L: rear loading versions with provision for internal light bias, target contact ring with 2 target contacts, metal sleeve on pumping stem to mount bias lamp,

XQ . . . ./03, R, G, B, L: front loading versions with provision for internal light bias, metal ring target contact, metal sleeve on pumping stem to mount bias light lamp.

Special features are:

- Mechanically interchangeable with 1 inch Vidicon tubes with separate mesh.
- Same resolving power as the 30 mm tubes from the XQ1020 series.

QUICK REFERENCE DATA

Separate mesh		
Diameter		25,4 mm (1 inch)
Length	approx.	165 mm
Provided with anti-halation glass disc		
Focusing	magnetic	
Deflection	magnetic	
Useful target area (scanning area)		9,6 x 12,8 mm
Spectral response		
max. at	approx.	450 nm
cut-off: XQ1070	approx.	650 nm
XQ1073	approx.	850 to 950 nm
XQ1075	approx.	750 nm
Sensitivity		
XQ1070, XQ1070L	typ.	400 μA/lm
XQ1070R	typ.	80 μA/lmF
XQ1070G	typ.	170 μA/lmF
XQ1070B	typ.	40 μA/lmF
XQ1073R, XQ1075R	typ.	110 μA/lmF
Resolution at 400 TV lines (5 MHz)		
XQ1070, XQ1070L	typ.	40 %
XQ1070R	typ.	35 %
XQ1070G	typ.	40 %
XQ1070B	typ.	50 %
XQ1073R, XQ1075R	typ.	45 %
Heater		6,3 V, 95 mA

® Registered trademark for television camera tubes.

OPTICAL DATA

		notes
Quality rectangle on photoconductive target (aspect ratio 3 : 4)	9,6 x 12,8 mm	

Orientation of image on target:

For correct orientation of the image on the target the vertical scan should be essentially parallel to the plane passing through the tube axis and the marker line on the protecting sleeve at the base.

Faceplate		
Thickness	1,2 ± 0,1 mm	
Refractive index	n = 1,49	
Anti-halation glass disc provided with anti-reflective coating		
Thickness	5 ± 0,1 mm	
Refractive index	n = 1,52	

XQ1075R is provided with infrared reflecting filter

ACCESSORIES

Socket	type 56605 or equivalent		
Deflection and focusing coil unit:	rear loading	front loading	
Black/white	type AT1126/03S	AT1116/06S	
Colour	type AT1126/03T	AT1116/06T	
Mask for flare reduction	type 56028		
Light bias lamp in holder for versions /02 and /03	type 56106		1

ELECTRICAL DATA

Deflection		magnetic
Focusing		magnetic
Heating, indirect by a.c. or d.c.; parallel supply		
Heater voltage	V_f	6,3 V ± 5%
Heater current at V_f = 6,3 V	I_f nom.	95 mA

The heater voltage must not exceed an r.m.s. value of 9,5 V. For optimum performance (lifetime and registration stability) stabilization of the heater voltage is recommended.

Capacitance		
Signal electrode to all		
rear loading types	C_{as}	2,5 to 3,5 pF
front loading types	C_{as}	3 to 5 pF

This capacitance, which is effectively the output impedance, increases when the tube is inserted in the coil unit.

LIMITING VALUES (Absolute maximum rating system)

Unless otherwise stated, all voltages are referred to the cathode.

				notes
Signal electrode voltage	V_{as}	max.	50 V	
Grid 4 voltage	V_{g4}	max.	1100 V	
Grid 3 voltage	V_{g3}	max.	800 V	
Voltage between grid 4 and grid 3	$V_{g4/g3}$	max.	450 V	
Grid 2 voltage	V_{g2}	max.	350 V	
Grid 1 voltage				
positive	V_{g1}	max.	0 V	
negative	$-V_{g1}$	max.	125 V	
Cathode to heater voltage				
positive peak	V_{kfp}	max.	125 V	
negative peak	$-V_{kfp}$	max.	50 V	
Cathode heating time before drawing current	t_h	min.	1 min	
External resistance between cathode and heater at $-V_{kfp} > 10$ V	R_{kf}	min.	2 kΩ	
Ambient temperature, storage and operation	T_{amb}	max.	50 °C	
		min.	−30 °C	
Faceplate temperature, storage and operation	T	max.	50 °C	2
		min.	−30 °C	
Faceplate illuminance	E	max.	500 lx	3

OPERATING CONDITIONS

			notes
For a scanned area of 9,6 x 12,8 mm			4
Cathode voltage	V_k	0 V	
Signal electrode voltage	V_{as}	45 V	
Beam current	I_b		5
Grid 4 voltage	V_{g4}	960 V	
Grid 3 voltage	V_{g3}	600 V	
Grid 2 voltage	V_{g2}	300 V	
Grid 1 voltage	V_{g1}	V	5
Blanking voltage on grid 1, peak to peak	$V_{g1p\text{-}p}$	50 V	
Faceplate illuminance	E	0 to 10 lx	6
Faceplate temperature	T	20 to 45 °C	2

ELECTRON GUN CHARACTERISTICS

Cut off		
Grid 1 voltage for cut-off at $V_{g2} = 300$ V, without blanking	V_{g1}	−35 to −100 V
Blanking voltage, peak to peak		
on grid 1	$V_{g1p\text{-}p}$	50 ± 10 V
on cathode	$V_{kp\text{-}p}$	25 V
Grid 2 current at normally required beam currents	I_{g2}	≤ 0,5 mA

PERFORMANCE

				notes
Dark current	I_d	≤ 3	nA	
Sensitivity at colour temperature of illuminance = 2856 K				7
XQ1070, XQ1070L	min. 375	typ. 400	μA/lm	
XQ1070R	min. 70	typ. 80	μA/lmF	
XQ1070G	min. 130	typ. 170	μA/lmF	
XQ1070B	min. 35	typ. 40	μA/lmF	
XQ1073R, XQ1075R	min. 75	typ. 110	μA/lmF	
Gamma of transfer characteristics		0,95 ± 0,05		
Spectral response, max. at		450	nm	
Spectral response, cut-off at		650 to 950	nm	
Spectral response curves	see Figs 1, 2 and 3			
Resolution				8

Modulation depth, i.e. uncompensated amplitude response at 400 TV lines at the centre of the picture.

	XQ1070 XQ1070L XQ1070G	XQ1070R	XQ1070B	XQ1073R XQ1075R	5
Highlight signal current I_s	200	100	100	100	nA
Beam current I_b	400	200	200	200	nA
Modulation depth at 400 TV lines					
typ.	40	35	50	40	%
min.	35	30	45	35	%

Modulation transfer characteristics: see Figs 4 and 5

Lag (typical values, without light bias) 11, 12

Light source with a colour temperature of 2856 K. Appropriate filter inserted in the light path for the chrominance tubes R, G and B.

LOW KEY CONDITIONS

	build-up lag		decay lag	
	I_s/I_b = 20/300 nA		I_s/I_b = 20/300 nA	
	60 ms	200 ms	60 ms	200 ms
XQ1070, XQ1070L	95%	≈ 100%	9%	3%
XQ1070G	95%	≈ 100%	9%	3%
XQ1070R	90%	≈ 100%	11%	4%
XQ1070B	90%	≈ 100%	11%	4%
XQ1073R, XQ1075R	85%	≈ 100%	11%	4%

Shading of light bias induced dark current 12,5%

MECHANICAL DATA

Mounting position: any

Mass: approx. 60 g

Base: JEDEC E8-11, IEC 67-I-33a

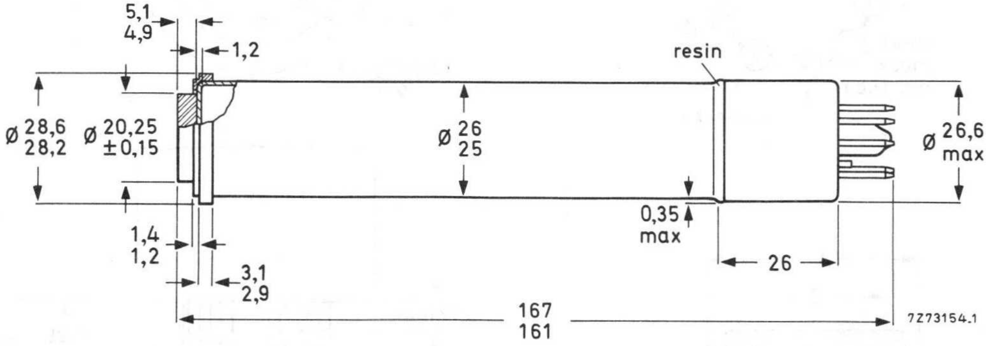

XQ1070

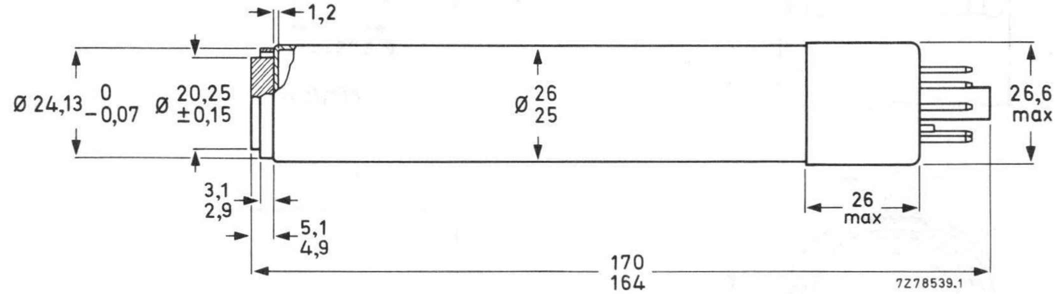

XQ1070/02

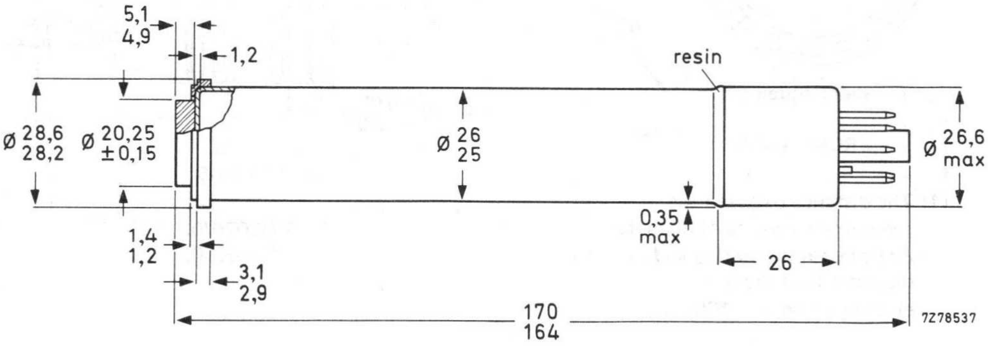

XQ1070/03

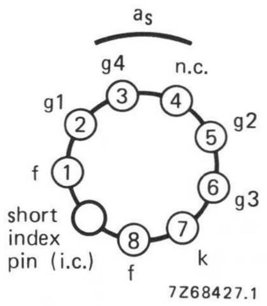

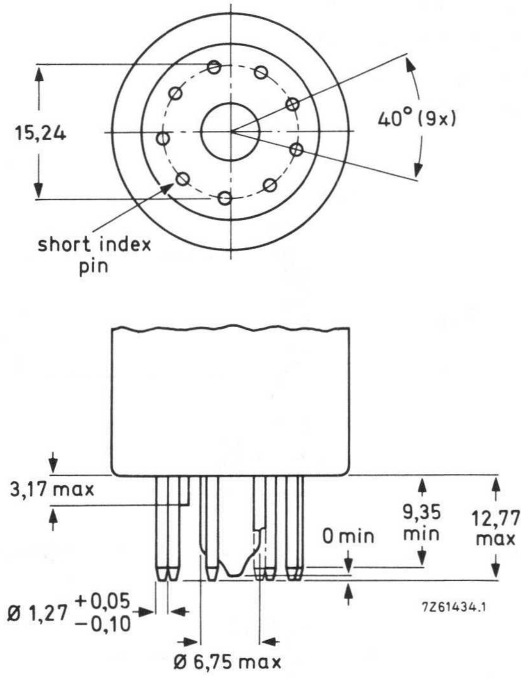

XQ1070

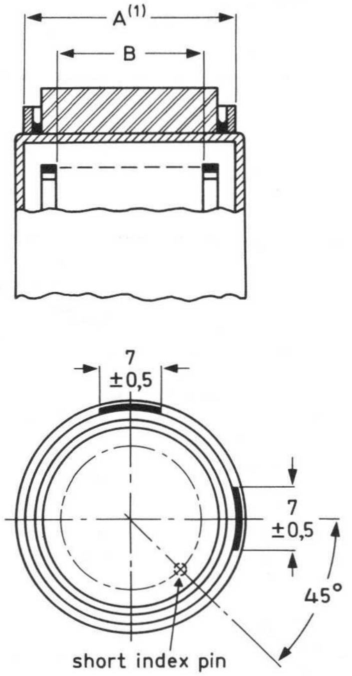

FRONT VIEW

(1) The distance between the geometrical centres of diameter A of the reference ring and diameter B of the mesh electrode ring is < 100 μm.

XQ1070/02

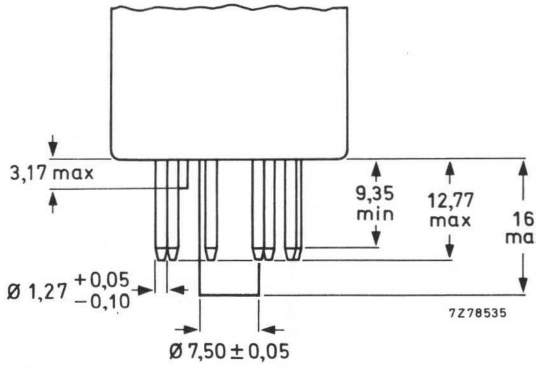

XQ1070/02
XQ1070/03

NOTES, see also General Section.

1. **For adjustable light bias in versions /02 and /03.**
   The light bias lamp assembly as supplied with each tube, type 56106, fits in the metal tube cemented to the pumping stem of the tube. The tube and the light bias lamp assembly will fit properly in the socket. The wires should be connected to a source, capable of supplying max. 110 mA at 5 V. Considerations and recommendations for the choice of such a source, depending on the application, are supplied with each tube. The light bias lamp projects its light via a blue-green transmitting filter on the pumping stem where it is conducted to the target to cause a bias illumination. The desired amount of light bias can be obtained by adjusting the current through the filament of the lamp. See also note 10.
2. The tube can withstand short excursions up to 70 °C without damage or irreversible degradation in performance.
3. For short intervals. During storage the tube face shall be covered with the plastic hood provided; when the camera is idle the lens shall be capped, in stand-by also the beam will be cut-off.
4. The operating conditions and performance data quoted relate to operation of the tube in coil units AT1116 or AT1126. See relevant data of deflection/focusing assemblies.
5. The beam current I_b, as obtained by adjusting the control grid (grid 1) voltage is set to 200 nA for R and B tubes, 400 nA for black and white, L and G tubes. I_b is not the actual current available in the scanning beam, but is defined as the maximum amount of signal current, I_s, that can be obtained with this beam.
   In the performance figures for lag, the signal current and beam current conditions are given, e.g. as I_s/I_b = 20/300 nA. This means: with a signal current of 20 nA and a beam setting which just allows a signal current of 300 nA.
   N.B. The signal currents are measured with an integrating instrument connected in the signal electrode lead and a uniform illumination of the scanned area. The peak signal currents on a waveform oscilloscope will be a factor α larger.

   $$\alpha = \frac{100}{100-\beta};$$

   β being the total blanking time in %; for CCIR system $\alpha = 1{,}3$.
6. Typical faceplate illumination level for the XQ1070 and XQ1070L to produce 200 nA signal current will be approx. 4 lx. The signal currents stated for the colour tubes R, G and B will be obtained with an incident white light level (2856 K) on the filter of approx. 10 lx. These figures are based on the filters described in note 7. For filter BG12, however, a thickness of 1 mm is chosen.
7. Measuring conditions: illuminance level 4,54 lx at a colour temperature of 2856 K and the appropriate filter inserted in the light path. The signal current obtained in nA is a measure of the colour sensitivity expressed in μA per lumen of white light before the filter. Filters used are:

XQ1070R, XQ1075R	Schott	OG570	thickness	3 mm
XQ1070G	Schott	VG9	thickness	1 mm
XQ1070B	Schott	BG12	thickness	3 mm
XQ1073R	Schott	OG570	thickness	3 mm
	and Calflex	B1/K1		

   For transmission curves see General Section.
8. As measured with a 50 mm Leitz Summicron lens having a sine response of approximately 85% at 400 TV lines at f : 5,6 and the appropriate filter inserted in the light path. The horizontal amplitude response can be raised by means of suitable correction circuits, which affect neither the vertical resolution nor the limiting resolution.

9. Build-up lag
   After 10 s of darkness. The figures are typical percentages of the ultimate signal current obtained 60 ms and 200 ms, respectively, after the introduction of the illuminance.

   Decay lag
   After the target has been illuminated for at least 5 s. The figures represent typical signals in percentages of the original signal current 60 ms and 200 ms, respectively, after removal of the illuminance.
10. A reduction of lag, especially under low key conditions is obtained when light bias is applied in versions /02 and /03. Infrared light with a wavelength > 600 nm in the light bias should be avoided.
    a. For monochrome operation a light bias corresponding to 2 to 3 nA extra dark current is usually adequate for excellent speed of response.
    b. In a colour camera the speeds of response of the tubes can be balanced by adjusting the amount of light bias per tube.
       In a 3-tube colour camera, for instance, it is recommended first to adjust the tubes to their normal highlight signal current and beam current settings and then point the camera at a dark scene comprising a metronome. The moving hand of the metronome carries a small white square. The illuminance should be chosen such that the square produces a peak signal of approximately 50 nA in the green chrominance channel. A maximum of 3 nA artificial dark current shall then be introduced in green chrominance tube. Subsequently light bias shall be applied to the tubes in the red and blue channels until the lag of the three tubes is neutralized.
11. Deviation of the level of any of the four corners, i.e. 10% inwards in H and V direction from the level in the picture centre. With the settings suggested in note 10 black shading compensation in the camera video processing amplifier will not normally be required. Further improvement in lag can be obtained by applying still higher light bias levels. It may then be necessary to use black shading compensation in the video processing amplifier.

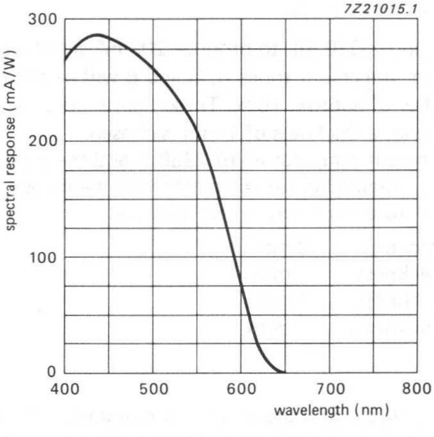

Fig. 1 Typical spectral response for XQ1070, L, G, B, R.

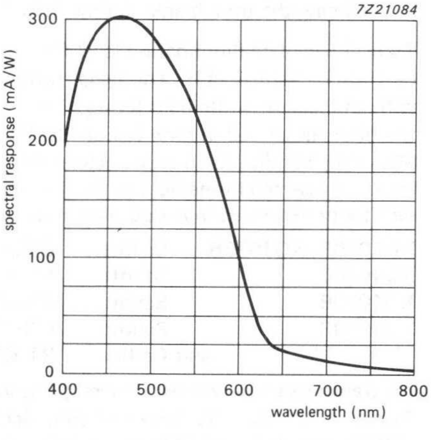

Fig. 2 Typical spectral response for XQ1073R.

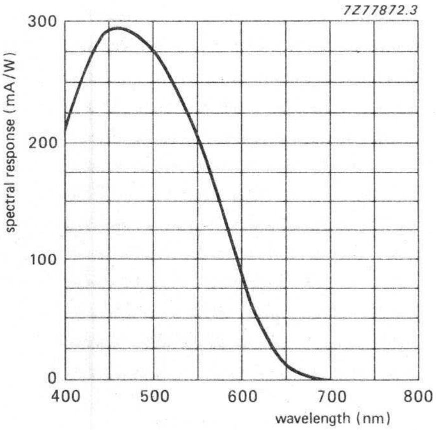

Fig. 3 Typical spectral response for XQ1075R.

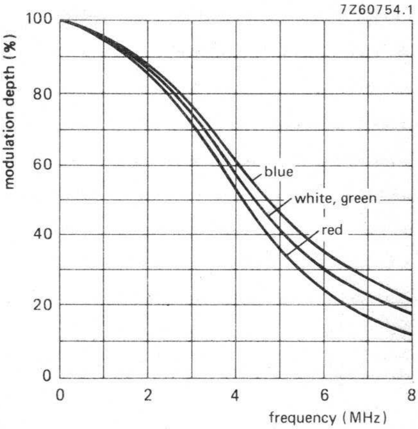

Fig. 4 Typical square-wave response curves for XQ1070.

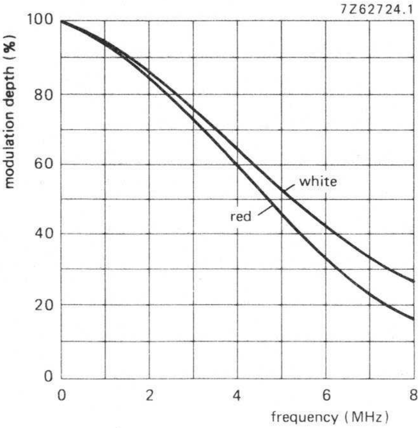

Fig. 5 Typical square-wave response curves for XQ1073 and XQ1075.

CAMERA TUBE

25,4 mm (1 inch) diameter Plumbicon® television camera tube, with standard resolution lead-oxide photoconductive target. The XQ1072 is exclusively intended for use with X-ray image intensifiers with P20 output phosphor in medical equipment.

QUICK REFERENCE DATA

Diameter		25,4 mm (1 inch)
Length	approx.	160 mm
Focusing	magnetic	
Deflection	magnetic	
Useful target area, circle, diameter		15 mm
Spectral response		
max. at	approx.	470 nm
cut-off:	approx.	650 nm
Sensitivity, P20 light source	typ.	500 μA/lm
Resolution at 13 lp/mm (5 MHz)		70 %
Heater		6,3 V, 95 mA

OPTICAL DATA

Quality area on photoconductive target, circle, diameter	15 mm

Orientation of image on target:

For correct orientation of the image on the target the vertical scan should be essentially parallel to the plane passing through the tube axis and the marker line on the protecting sleeve at the base

Faceplate	
Thickness	1,2 ± 0,1 mm
Refractive index	n = 1,49

Without anti-halation glass disc

ACCESSORIES

Socket	type 56605
Deflection and focusing coil unit	type AT1116S

ELECTRICAL DATA

Deflection		magnetic
Focusing		magnetic
Heating, indirect by a.c. or d.c.;		
Heater voltage	V_f	6,3 V ± 5%
Heater current at V_f = 6,3 V	I_f nom.	95 mA

The heater voltage must not exceed an r.m.s. value of 9,5 V. For optimum performance stabilization of the heater voltage is recommended.

Capacitance		
Signal electrode to all	C_{as}	3 to 5 pF

This capacitance, which is effectively the output impedance, increases when the tube is inserted in the coil unit.

® Registered trademark for television camera tubes.

LIMITING VALUES (Absolute maximum rating system)

notes

Unless otherwise stated, all voltages are referred to the cathode.

Signal electrode voltage	V_{as}	max.	50	V	
Grid 4 voltage	V_{g4}	max.	1100	V	
Grid 3 voltage	V_{g3}	max.	800	V	
Voltage between grid 4 and grid 3	$V_{g4/g3}$	max.	450	V	
Grid 2 voltage	V_{g2}	max.	350	V	
Grid 2 dissipation	W_{g2}	max.	1	W	
Grid 1 voltage,					
positive	V_{g1}	max.	0	V	
negative	$-V_{g1}$	max.	125	V	
Cathode to heater voltage					
positive peak	V_{kfp}	max.	125	V	
negative peak	$-V_{kfp}$	max.	50	V	
Cathode heating time before drawing cathode current	t_h	min.	1	min	
External resistance between cathode and heater at $-V_{kfp} > 10$ V	R_{kf}	min.	2	kΩ	
Ambient temperature, storage and operation	T_{amb}	max.	50	°C	
		min.	30	°C	
Faceplate temperature, storage and operation	T	max.	50	°C	1
		min.	30	°C	
Faceplate illuminance	E	max.	500	lx	2

OPERATING CONDITIONS

For a scanned circular area with a diameter of 15 mm				3
Cathode voltage	V_k	0	V	
Signal electrode voltage	V_{as}	45	V	
Beam current	I_b			4
Grid 4 voltage	V_{g4}	960	V	
Grid 3 voltage	V_{g3}	600	V	
Grid 2 voltage	V_{g2}	300	V	
Grid 1 voltage	V_{g1}		V	4
Blanking voltage on grid 1, peak to peak	$V_{g1p\text{-}p}$	50 ± 10	V	
Faceplate illuminance	E	approx. 1	lx	
Faceplate temperature	T	20 to 45	°C	

ELECTRON GUN CHARACTERISTICS

Cut off			
Grid 1 voltage for cut-off at $V_{g2} = 300$ V, without blanking	V_{g1}	−35 to −100	V
Blanking voltage, peak to peak at $V_{g2,4} = 300$ V,			
on grid 1	$V_{g1p\text{-}p}$	50 ± 10	V
on cathode	$V_{kp\text{-}p}$	25	V
Grid 2 current at normally required beam currents	I_{g2}	⩽ 0,5	mA

PERFORMANCE

						notes
Dark current	I_d		⩽	3	nA	
Sensitivity at colour temperature of illuminance = 2856 K	min.	130	typ.	165	µA/lmF	5
Sensitivity with P20 light source	min.	395	typ.	500	µA/lm	
Peak signal current with E = 1 lx (P20)	min.	160	typ.	200	nA	6
Gamma of transfer characteristic			0,95 ± 0,05			
Spectral response,						
max. at	approx.			470	nm	
cut-off at	approx.			650	nm	
Spectral response curve	see Fig. 1					
Resolution						
Modulation depth, i.e. uncompensated amplitude response at 13 lp/mm (scanned area circle, diameter 15 mm) at the centre of the picture. (5 MHz, 400 TV lines)			typ.	70	%	7
Modulation transfer characteristic	see Fig. 2					
Decay lag, P20 light source, measured with a signal current of 200 nA, beam adjusted for correct stabilization after the target has been illuminated for at least 5 s.						
Residual signal after dark pulse						
of 60 ms	max.	6	typ.	4	%	
of 200 ms	max.	2,5	typ.	1,5	%	

MECHANICAL DATA

Mounting position: any

Net mass: approx. 60 g

Base: IEC 67-I-33a (JEDEC E8-11)

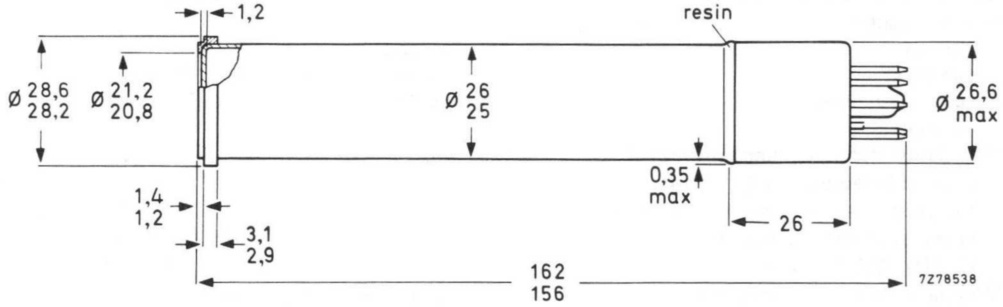

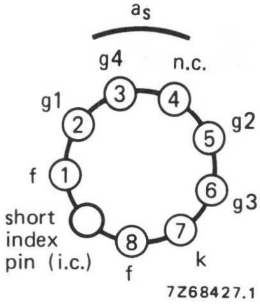

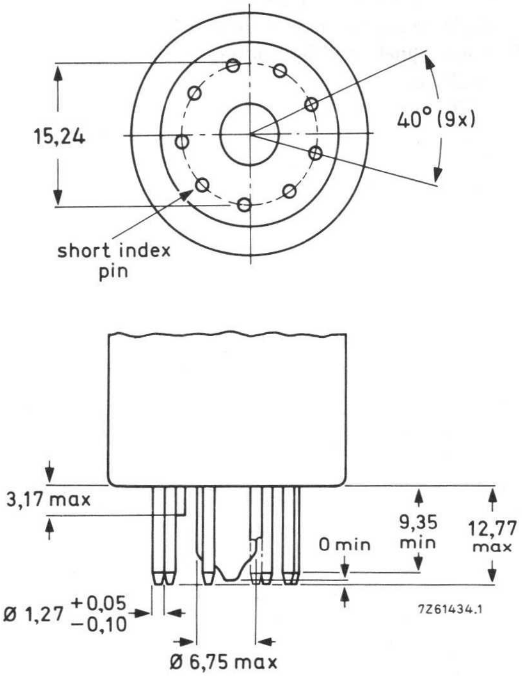

NOTES, see also General Section

1. The tube can withstand short excursions up to 70 °C without damage or irreversible degradation in performance.
2. For short intervals. During storage the tube face shall be covered with the plastic hood provided; when the camera is idle the lens shall be capped, in stand-by also the beam will be cut-off.
3. The operating conditions and performance data quoted relate to operation of the tube in coil unit AT1116S. See relevant data of deflection/focusing assemblies. Scanning amplitude should be adjusted such that the useful target area of 15 mm is displayed on a standard monitor as a circular area with a diameter equal to the raster height.
4. The beam current I_b, as obtained by adjusting the control grid (grid 1) voltage is set to max. 500 nA. I_b is not the actual current available in the scanning beam, but is defined as the maximum amount of signal, I_s, that can be obtained with this beam. See note 6.
5. Measuring conditions: illuminance level 4,54 lx at a colour temperature of 2856 K and a filter Schott VG9 inserted in the light path. For transmission of the filter, see General Section.
6. The peak signal currents are measured on a waveform oscilloscope and with a uniform illumination on the 15 mm diameter target area. When measured with an integrating instrument connected in the signal-electrode lead the average signal currents will be smaller:
   a. by a factor $\alpha = 100 - \beta/100$, β being the total blanking time in %; for the CCIR system α amounts to 0,75.
   b. by a factor δ, δ being the ratio of the active target area (circle with 15 mm diameter) to the area which would correspond with the adjusted scanning amplitudes (15 x 20 mm). This ratio amounts to $\delta = 0{,}59$. The total ratio of integrated signal current, I_s, to the peak signal current, I_{sp}, amounts to $\alpha \times \delta = 0{,}44$.
7. As measured with a 50 mm Leitz Summicron lens having a sine response of approximately 85% at 400 TV lines at f : 5,6. The published 70% typ. is uncorrected. Tube resolution is higher. Measured with 100 nA signal current and a beam current just sufficient to stabilize a signal current of 500 nA. The horizontal amplitude response can be raised by means of suitable correction circuits, which affect neither the vertical resolution nor the limiting resolution.

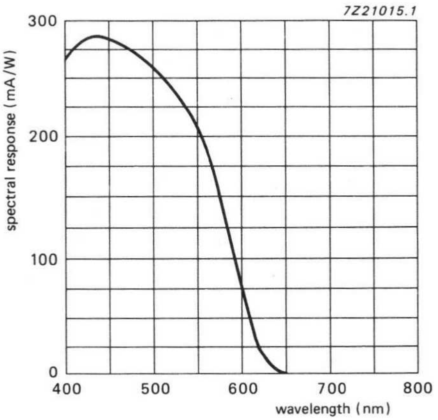

Fig. 1 Typical spectral response.

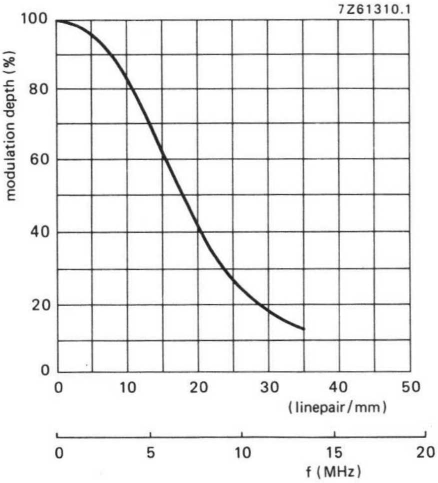

Fig. 2 Typical square-wave response curve.

CAMERA TUBE

25,4 mm (1 inch) diameter Plumbicon® television camera tube, with high resolution lead-oxide photoconductive target. The XQ1073X is provided with a green BG18 anti halation glass disc for reduction of flare and is exclusively intended for use with X-ray image intensifiers with P20 output phosphor in medical equipment.

QUICK REFERENCE DATA

Diameter		25,4 mm (1 inch)
Length	approx.	162 mm
Focusing	magnetic	
Deflection	magnetic	
Useful target area, circle, diameter		15 mm
Spectral response		
max. at	approx.	500 nm
cut-off:	approx.	650 nm
Sensitivity, P20 light source	typ.	485 μA/lm
Resolution at 13 lp/mm (5 MHz)		75 %
Heater		6,3 V, 95 mA

OPTICAL DATA

Quality area on photoconductive target, circle, diameter	15 mm

Orientation of image on target:

For correct orientation of the image on the target the vertical scan should be essentially parallel to the plane passing through the tube axis and the marker line on the protecting sleeve at the base.

Faceplate	
Thickness	1,2 ± 0,1 mm
Refractive index	n = 1,49
With anti-halation glass disc, BG18	
Thickness	1,07 ± 0,05 mm
Refractive index	n = 1,53

ACCESSORIES

Socket	type 56098
Deflection and focusing coil unit	type AT1116S

ELECTRICAL DATA

Deflection		magnetic
Focusing		magnetic
Heating, indirect by a.c. or d.c.;		
Heater voltage	V_f	6,3 V ± 5%
Heater current at V_f = 6,3 V	I_f nom.	95 mA

The heater voltage must not exceed an r.m.s. value of 9,5 V. For optimum performance stabilization of the heater voltage is recommended.

Capacitance		
Signal electrode to all	C_{as}	3 to 5 pF

This capacitance, which is effectively the output impedance, increases when the tube is inserted in the coil unit.

® Registered trade mark for television camera tubes.

LIMITING VALUES (Absolute maximum rating system)

Unless otherwise stated, all voltages are referred to the cathode.

				notes
Signal electrode voltage	V_{as}	max.	50 V	
Grid 4 voltage	V_{g4}	max.	1100 V	
Grid 3 voltage	V_{g3}	max.	800 V	
Voltage between grid 4 and grid 3	$V_{g4/g3}$	max.	450 V	
Grid 2 voltage	V_{g2}	max.	350 V	
Grid 2 dissipation	W_{g2}	max.	1 W	
Grid 1 voltage, positive	V_{g1}	max.	0 V	
Grid 1 voltage, negative	$-V_{g1}$	max.	125 V	
Cathode to heater voltage				
positive peak	V_{kfp}	max.	125 V	
negative peak	$-V_{kfp}$	max.	50 V	
Cathode heating time before drawing cathode current	t_h	min.	1 min	
External resistance between cathode and heater at $-V_{kfp} > 10$ V	R_{kf}	min.	2 kΩ	
Ambient temperature, storage and operation	T_{amb}	max. min.	50 °C −30 °C	
Faceplate temperature, storage and operation	T	max. min.	50 °C −30 °C	1
Faceplate illuminance	E	max.	100 lx	2

OPERATING CONDITIONS

For a scanned circular area with a diameter of 15 mm				3
Cathode voltage	V_k		0 V	
Signal electrode voltage	V_{as}		45 V	
Beam current	I_b			4
Grid 4 voltage	V_{g4}		960 V	
Grid 3 voltage	V_{g3}		600 V	
Grid 2 voltage	V_{g2}		300 V	
Grid 1 voltage	V_{g1}		V	4
Blanking voltage on grid 1, peak to peak	V_{g1p-p}		50 ± 10 V	
Faceplate illuminance	E	approx.	1 lx	
Faceplate temperature	T		20 to 45 °C	

ELECTRON GUN CHARACTERISTICS

Cut off			
Grid 1 voltage for cut-off at V_{g2} = 300 V, without blanking	V_{g1}		−35 to −100 V
Blanking voltage, peak to peak at $V_{g2,4}$ = 300 V,			
on grid 1	V_{g1p-p}		50 ± 10 V
on cathode	V_{kp-p}		25 V
Grid 2 current at normally required beam currents	I_{g2}	⩽	0,5 mA

PERFORMANCE

						notes
Dark current	I_d		$\leqslant$	3	nA	
Sensitivity at colour temperature of illuminance = 2856 K	min.	90	typ.	115	μA/lmF	5
Sensitivity with P20 light source	min.	400	typ.	485	μA/lm	
Peak signal current with E = 1 lx (P20)	min.	160	typ.	195	nA	6
Gamma of transfer characteristic				0,95 ± 0,05		
Spectral response,						
max. at	approx.			500	nm	
cut-off at	approx.			650	nm	
Spectral response curve	see Fig. 1					
Resolution						7
Modulation depth, i.e. uncompensated amplitude response at 13 lp/mm (scanned area circle, diameter 15 mm) at the centre of the picture. (5 MHz, 400 TV lines)			typ.	75	%	
Modulation transfer characteristic	see Fig. 2					
Decay lag, P20 light source, measured with a signal current of 200 nA, beam adjusted for correct stabilization after the target has been illuminated for at least 5 s.						
Residual signal after dark pulse						
of 60 ms	max.	6	typ.	4	%	
of 200 ms	max.	2,5	typ.	1,5	%	

MECHANICAL DATA

Mounting position: any

Mass: approx. 60 g

Base: JEDEC E8-11, IEC 67-I-33a

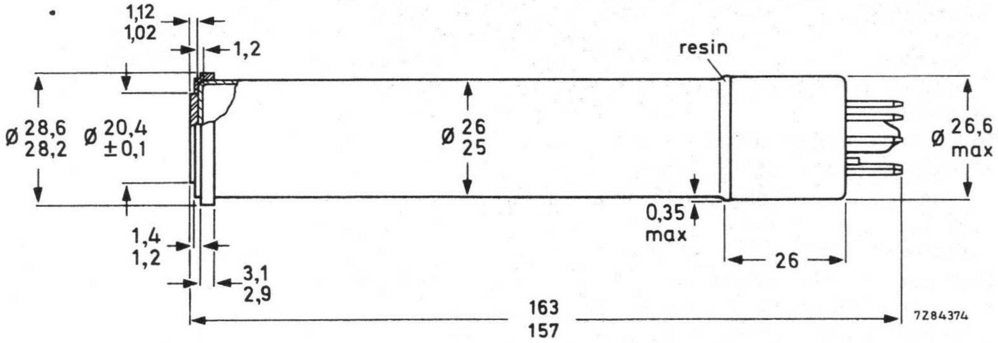

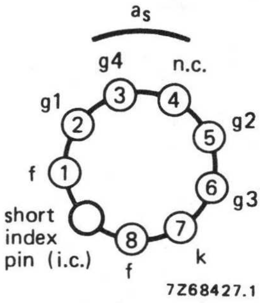

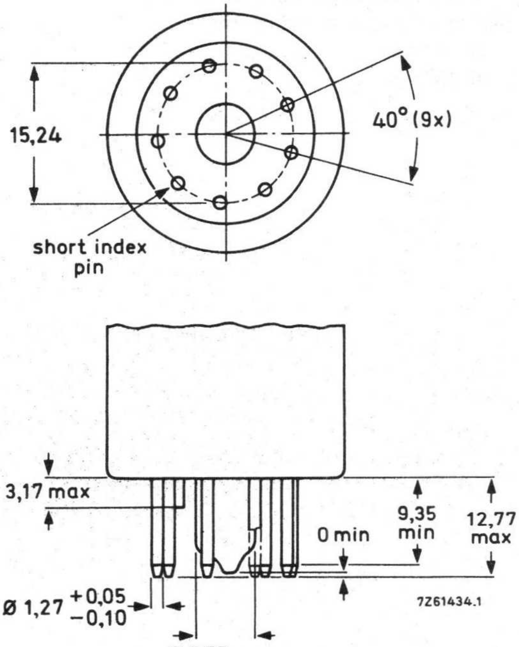

NOTES, see also General Section

1. The tube can withstand short excursions up to 70 °C without damage or irreversible degradation in performance.
2. For short intervals. During storage the tube face shall be covered with the plastic hood provided; when the camera is idle the lens shall be capped, in stand-by also the beam will be cut-off.
3. The operating conditions and performance data quoted relate to operation of the tube in coil unit AT1116S. See relevant data of deflection/focusing assemblies. Scanning amplitude should be adjusted such that the useful target area of 15 mm is displayed on a standard monitor as a circular area with a diameter equal to the raster height.
4. The beam current I_b, as obtained by adjusting the control grid (grid 1) voltage is set to max. 500 nA. I_b is not the actual current available in the scanning beam, but is defined as the maximum amount of signal, I_s, that can be obtained with this beam. See note 6.
5. Measuring conditions: illuminance level 4,54 lx at a colour temperature of 2856 K and a filter Schott VG9 inserted in the light path. For transmission of the filter, see General Section.
6. The peak signal currents are measured on a waveform oscilloscope and with a uniform illumination on the 18 mm diameter target area. When measured with an integrating instrument connected in the signal-electrode lead the average signal currents will be smaller:
   a. by a factor α, ($\alpha = \{100 - \beta\}/100$, β being the total blanking time in %; for the CCIR system α amounts to 0,75.
   b. by a factor δ, δ being the ratio of the active target area (circle with 15 mm diameter) to the area which would correspond with the adjusted scanning amplitudes (15 x 20 mm). This ratio amounts to $\delta = 0{,}59$. The total ratio of integrated signal current, I_s, to the peak signal current, I_{sp}, amounts to $\alpha \times \delta = 0{,}44$.
7. As measured with a 50 mm Leitz Summicron lens having a sine response of approximately 85% at 400 TV lines at f : 5,6. The published 75% typ. is uncorrected. Tube resolution is higher. Measured with 100 nA signal current and a beam current just sufficient to stabilize a signal current of 500 nA. The horizontal amplitude response can be raised by means of suitable correction circuits, which affect neither the vertical resolution nor the limiting resolution.

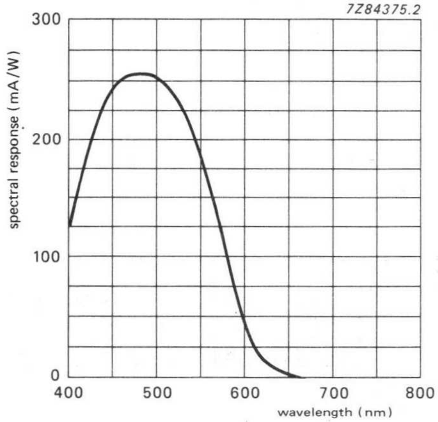

Fig. 1 Typical spectral response.

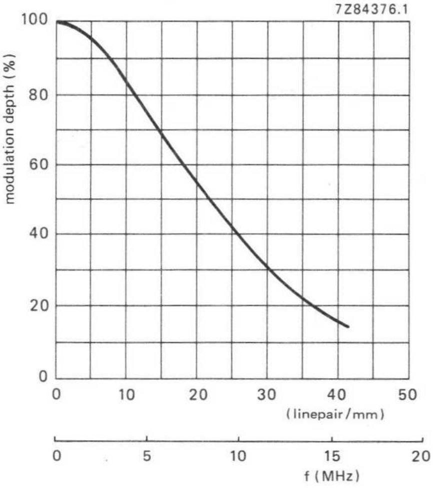

Fig. 2 Typical square-wave response curve.

CAMERA TUBES

25,4 mm (1 inch) diameter Plumbicon® television camera tubes, with high resolution lead-oxide photoconductive target, for use in high quality monochrome or colour cameras for broadcast, educational or industrial applications.

The XQ1500 series comprises the following versions:

XQ1500	for use in monochrome cameras
XQ1500L	for use in the luminance channel of colour cameras
XQ1500R	for use in the red channel
XQ1500G	for use in the green channel
XQ1500B	for use in the blue channel
XQ1503R	for use in the red channel; extended red response
XQ1505R	for use in the red channel; extended red response and IR filter

Special features are:

- Anti-Comet-Tail (ACT) electron gun for highlight handling
- Extremely low lag
- Provisions for light bias to reduce lag
- Target centring ring for precise optical alignment
- Low output capacitance for optimum S/N ratio
- Increased resolving power as compared with XQ1080 series
- Rear loading

QUICK REFERENCE DATA

ACT electron gun		
Diameter		25,4 mm (1 inch)
Length	approx.	165 mm
Provided with anti-halation glass disc		
Focusing	magnetic	
Deflection	magnetic	
Useful target area (scanning area)		9,6 x 12,8 mm
Spectral response		
max. at	approx.	450 nm
cut-off: XQ1500	approx.	650 nm
XQ1503	approx.	850 to 950 nm
XQ1505	approx.	750 nm
Sensitivity		
XQ1500, XQ1500L	typ.	375 μA/lm
XQ1500R	typ.	80 μA/lmF
XQ1500G	typ.	160 μA/lmF
XQ1500B	typ.	40 μA/lmF
XQ1503R, XQ1505R	typ.	100 μA/lmF
Resolution at 400 TV lines (5 MHz)		
XQ1500, XQ1500L	typ.	50 %
XQ1500R	typ.	40 %
XQ1500G	typ.	50 %
XQ1500B	typ.	55 %
XQ1503R, XQ1505R	typ.	50 %
Heater		6,3 V, 190 mA

® Registered trade mark for television camera tubes.

OPTICAL DATA

		notes
Quality rectangle on photoconductive target (aspect ratio 3 : 4)	9,6 x 12,8 mm	

Orientation of image on target:

For correct orientation of the image on the target the vertical scan should be essentially parallel to the plane passing through the tube axis and the marker line on the protecting sleeve at the base

Faceplate		
Thickness	1,2 ± 0,1 mm	
Refractive index	n = 1,49	
Anti-halation glass disc provided with anti-reflective coating		
Thickness	5 ± 0,1 mm	
Refractive index	n = 1,52	

XQ1505R is provided with an infrared reflecting filter.

ACCESSORIES

Socket	type 56026, or 56605	
Deflection and focusing coil unit:		
Black/white	type AT1126/03S	
Colour	type AT1126/03T	
Mask for flare reduction	type 56028	
Light bias lamp in holder	type 56027	1

ELECTRICAL DATA

Deflection		magnetic	
Focusing		magnetic	
Heating, indirect by a.c. or d.c.; parallel supply			
Heater voltage	V_f	6,3 V ± 5%	
Heater current at V_f = 6,3 V	I_f nom.	190 mA	

The heater voltage must not exceed an r.m.s. value of 9,5 V. For optimum performance (lifetime and registration stability) stabilization of the heater voltage is recommended.

Capacitance			
Signal electrode to all	C_{as}	2,5 to 3,5 pF	

This capacitance, which is effectively the output impedance, increases when the tube is inserted in the coil unit.

LIMITING VALUES (Absolute maximum rating system)

Unless otherwise stated, all voltages are referred to the cathode.

				notes
Signal electrode voltage	V_{as}	max.	50 V	
Grid 6 (mesh) voltage	V_{g6}	max.	1100 V	
Grid 5 (collector) voltage	V_{g5}	max.	800 V	
Voltage between grid 6 and grid 5	$V_{g6/g5}$	max.	350 V	
Grid 4 (limiter) and grid 2 (accelerator, first anode) voltage	$V_{g2,4}$	max.	350 V	
Grid 3 (auxiliary) voltage	V_{g3}	max.	350 V	
Grid 1 (control) voltage,				
positive	V_{g1}	max.	0 V	
negative	$-V_{g1}$	max.	200 V	
Cathode heating time before drawing cathode current	t_h	min.	1 min	
Cathode to heater voltage				
positive peak	V_{kfp}	max.	50 V	
negative peak	$-V_{kfp}$	max.	50 V	
External resistance between cathode and heater at $-V_{kfp} > 10$ V	R_{kf}	min.	2 kΩ	
Ambient temperature, storage and operation	T_{amb}	max.	50 °C	
		min.	−30 °C	
Faceplate temperature, storage and operation	T	max.	50 °C	2
		min.	−30 °C	
Faceplate illuminance	E	max.	500 lx	3

OPERATING CONDITIONS (with ACT action) 4,5

			notes
For a scanned area of 9,6 x 12,8 mm. All voltages are specified with respect to the cathode potentional during the read-out mode, unless otherwise indicated.			6,7,8
Cathode voltage			
during read-out mode	V_k	0 V	
during ACT mode	V_k	0 to 15 V	
Signal electrode voltage	V_{as}	45 V	
Grid 6 (mesh) voltage	V_{g6}	750 V	9
Grid 5 (collector) voltage	V_{g5}	475 V	
Grid 4 (limiter) and grid 2 (accelerator, or first anode) voltage	$V_{g2,4}$	300 V	
Grid 3 (auxiliary) voltage			
during read-out mode	V_{g3}		8
during ACT mode	V_{g3}		8
Grid 1 (control) voltage			
during read-out mode	V_{g1}		10
during ACT mode	V_{g1}		8
Blanking voltage on grid 1, peak	V_{g1p}	50 V	

		notes
Typical beam current, signal current and pulse settings:		8,10

	XQ1500 XQ1500L	XQ1500R XQ1503R XQ1505R	XQ1500G	XQ1500B	
Signal current, peak I_{sp}	0,2	0,1	0,2	0,1	μA
Beam current, peak I_{bp}	0,4	0,2	0,4	0,2	μA
ACT level, peak	0,28	0,14	0,28	0,14	μA
Cathode pulse V_{kp}	8	4	8	4	V
Grid 1 pulse V_{g1p}	28	24	28	24	V
Grid 3 pulse V_{g3p}					see note 8

Faceplate illuminance	0 to 10	lx	11
Faceplate temperature	20 to 45	°C	2

ELECTRON GUN CHARACTERISTICS

Cut off				
Grid 1 voltage for cut-off at $V_{g2,4}$ = 300 V, without blanking or ACT pulses	V_{g1}	−40 to −110	V	
Blanking voltage, peak to peak at $V_{g2,4}$ = 300 V on grid 1	$V_{g1p\text{-}p}$	50 ± 10	V	12
Grids 2 and 4 current	$I_{g2,4}$	< 0,2	mA	13
Grids 3, 5 and 6 current	$I_{g3,5,6}$			13
Pulse timing and amplitude requirements (ACT)				8

PERFORMANCE

Dark current, without light bias	I_d		⩽ 1	nA	
Sensitivity at colour temperature of illuminance = 2856 K					14
XQ1500, XQ1500L	min. 330	typ.	375	μA/lm	
XQ1500R	min. 70	typ.	80	μA/lmF	
XQ1500G	min. 135	typ.	160	μA/lmF	
XQ1500B	min. 35	typ.	40	μA/lmF	
XQ1503, XQ1505R	min. 75	typ.	100	μA/lmF	
Gamma of transfer characteristics			0,95 ± 0,05		
Light transfer characteristics with ACT	see Fig. 2				
Highlight handling	⩾		5	lens stops	15
Spectral response, max. at	approx.		450	nm	
Spectral response, cut-off : XQ1500	approx.		650	nm	
XQ1503	approx.		850 to 950	nm	
XQ1505	approx.		750	nm	
Spectral response curves	see Figs 3, 4 and 5				

notes

Resolution 16

Modulation depth, i.e. uncompensated amplitude response at 400 TV lines at the centre of the picture. The figures shown represent the horizontal amplitude response as measured with a lens aperture f : 5,6

Modulation transfer characteristics: see Figs 6 and 6a

	XQ1500 XQ1500L	XQ1500R	XQ1500G	XQ1500B	XQ1503R XQ1505R	
Highlight signal current I_s	200	100	200	100	100	nA
Beam current I_b	400	200	400	200	200	nA
Modulation depth at 400 TV lines						
typ.	50	40	50	55	50	%
min.	45	35	45	50	45	%

Lag (typical values) 17

Light source with a colour temperature of 2856 K. Appropriate filter inserted in the light path for the chrominance tubes R, G and B.

LOW KEY CONDITIONS (with light bias of 3 nA)

	build-up lag		decay lag	
	I_s/I_b = 20/300 nA		I_s/I_b = 20/300 nA	
	60 ms	200 ms	60 ms	200 ms
XQ1500, XQ1500L, XQ1500G	98%	≈ 100%	6%	2%
XQ1500R	95%	≈ 100%	7%	3%
XQ1500B	95%	≈ 100%	9%	3,5%
XQ1503R	95%	≈ 100%	7%	3%
XQ1505R	95%	≈ 100%	7%	3%

Typical effect of light bias on build-up and decay lag under low key signal current and beam settings are shown in Figs 7 to 14. 18

Shading of light bias induced dark current 12,5% 19

MECHANICAL DATA

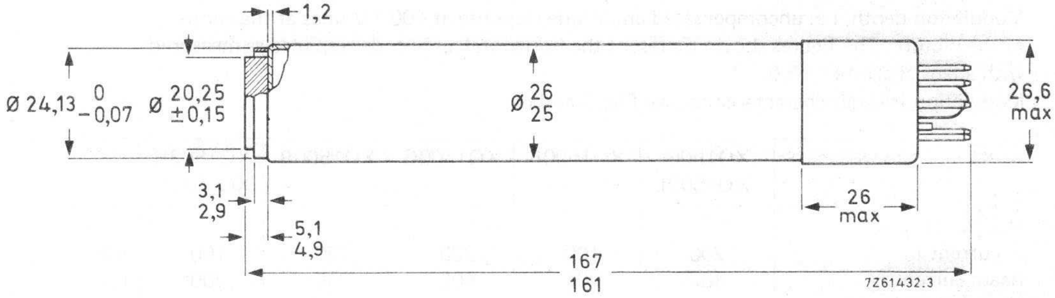

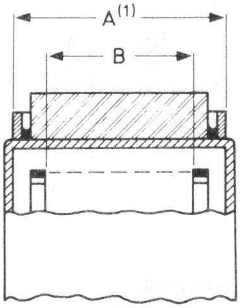

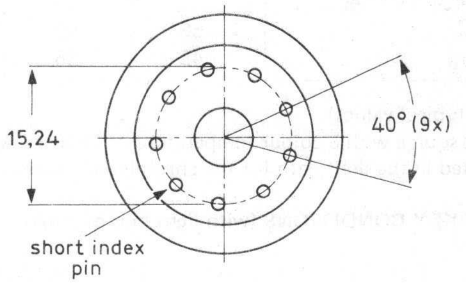

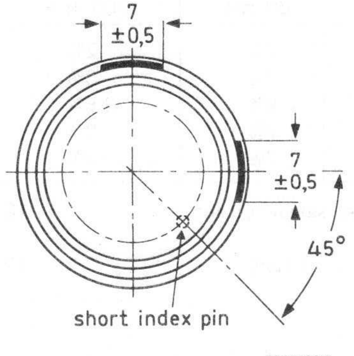

FRONT VIEW

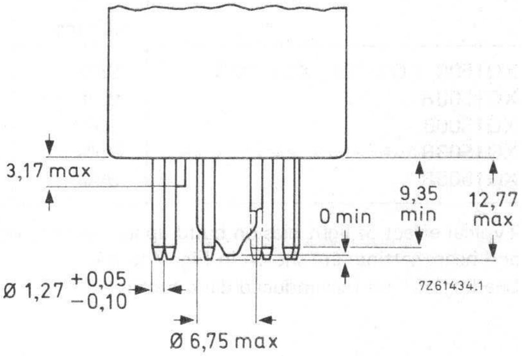

Mounting position: any

Mass: ≈ 70 g

Mase: IEC67-I-33a (JEDEC E8-11)

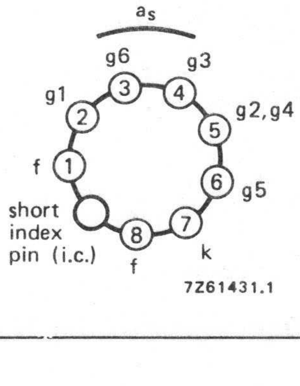

(1) The distance between the geometrical centres of the diameter A of the reference ring and the diameter B of the mesh-electrode ring is < 100 μm.

NOTES, see also General Section

1. The light bias lamp in its holder fits into the socket type 56026 and requires maximum 5 V, 110 mA. Its light is projected on to the pumping stem via a blue-green transmitting filter and is conducted to cause a bias illuminance on the target. The required amount of light bias can be obtained by adjusting the filament current of the lamp. See also note 18.
2. The tube can withstand short excursions up to 70 ^{o}C without damage or irreversible degradation in performance.
3. For short intervals. During storage the tube face shall be covered with the plastic hood provided; when the camera is idle the lens shall be capped, in stand-by also the beams will be cut-off.
4. The operating conditions and performance data quoted relate to operation of the tube in coil unit AT1126. See relevant data of deflection/focusing assemblies.
5. When the tube is to be used without ACT action, grid 3 should be connected to grids 2 and 4 and no ACT pulses should be applied to the cathode and grid 1. The performance of the tube will then be as described herein with the exception of the highlight handling.
6. a. For proper ACT action the d.c. voltage supply and/or pulse supply to the various electrodes should have sufficiently low impedance; see note 13.
   b. Video preamplifier: In the presence of highlights, peak signal currents of the order of 15 to 45 μA may be offered to the preamplifier during flyback. Special measures have to be taken in the preamplifier to prevent temporary overloading.
7. a. Read-out mode: Defined as the operating conditions during the active line scan (full line period-line blanking interval). For the CCIR system this will amount to 64 μs – 12 μs = 52 μs.
   b. ACT mode: Defined as the operating conditions during that part of the line blanking interval during which the ACT electrode gun is fully operative. The ACT interval is equal to or slightly within the line flyback time.
8. Pulse timing (CCIR) and amplitudes for ACT action (blanking applied to grid 1, see note 12).
   a. For proper operation and setting up of the ACT electron gun three electrodes have to be pulsed:
      - Cathode: A positive-going pulse, V_{kp}, with an adjustable amplitude of 0 to 20 V. this pulse can be chosen to coincide with the camera blanking period (approx. 11 μs). The amplitude of this pulse determines the ACT cutting level and may in general be preset to 8, 4, 8 and 4 V, for black/white, R, G, and B application respectively. An amplitude of 20 V should be available to preset the I_s/I_b; see note 10.
      - Grid 1: A positive-going pulse, V_{g1p}, with such an amplitude that during the ACT mode the grid 1 bias is effectively reduced by 20 V, (V_{g1p} = 20 V + V_{kp}), to produce an extra amount of cathode current. The duration of this pulse should be so chosen that it is just within the flyback period (approx. 5 μs).
      - Grid 3: A negative-going pulse, V_{g3p}, timing and duration coinciding with V_{g1p}, with:
        - either and adjustable amplitude and superimposed on a fixed grid 3 voltage of 250 to 300 V,
        - or with fixed amplitude and superimposed on an adjustable grid 3 voltage of 250 to 300 V,

        in either case, adjusted to result in a grid 3 voltage of 8,5 V with respect to the cathode voltage during the ACT mode. This pulse ensures that an adequate amount of beam current is drawn from the cathode current.
   b. A suggested pulse timing and amplitude diagram is shown in Fig. 1.
9. Operation with ACT at $V_{g6} > 750$ V is not recommended since this may introduce dark current.

10. Adjusted with the ACT made inoperative, e.g. by setting the cathode pulse to 20 V. The control grid voltage is adjusted to produce a beam current just sufficient to allow a peak signal current of twice the typical value, I_{sp}, as observed and measured on a waveform oscilloscope. This amount of beam current is termed I_{bp}. I_b is set at 200 nA for R and B tubes and at 400 nA for L and G tubes.

    N.B. The signal current, I_s, and the beam current, I_b, conditions quoted with the performance figures for e.g. lag relate to measurements with an integrating instrument connected in the signal electrode lead and a uniform illuminance on the scanned area. The corresponding peak currents, I_{sp} and I_{bp}, as measured on a waveform oscilloscope will be a factor α larger.
    ($\alpha = 100/\{100-\beta\}$; β being the total blanking time in %; for CCIR system $\alpha = 1{,}3$).
11. Typical faceplate illumination level for the XQ1500 and XQ1500L to produce 200 nA signal current will be approx. 4,3 lx. The signal currents stated for the colour tubes R, G and B will be obtained with an incident white light level (2856 K) on the filter of approx. 11 lx. These figures are based on the filters described in note 14. For filter BG12, however, a thickness of 1 mm is chosen.
12. Blanking can also be applied to the cathode:
    - without ACT action; required cathode pulse approx. 25 V
    - with ACT action; timing, polarity and amplitudes of the ACT pulses will have to be adapted.
13. The d.c. voltage supply and/or pulse supply to these electrodes should have a sufficiently low impedance to prevent distortion caused by the peak currents drawn during the ACT mode. These peak currents may amount to:

cathode	2 mA
grid 1	0 mA
grids 2 and 4	1 mA
grid 3	150 μA
grid 5	300 μA
grid 6	300 μA

    The cathode impedance should preferably be chosen ⩽ 300 Ω.
14. Measuring conditions: illuminance level 4,54 lx at a colour temperature of 2856 K and the appropriate filter inserted in the light path. The signal current obtained in nA is a measure of the colour sensitivity expressed in μA per lumen of white light before the filter. Filters used are:

XQ1500R, XQ1505R	Schott	OG570	thickness 3 mm
XQ1500G	Schott	VG9	thickness 1 mm
XQ1500B	Schott	BG12	thickness 3 mm
XQ1503R	Schott	OG570	thickness 3 mm
	and Calflex	B1/K1	

    For transmission curves see General Section.
15. With pulses applied as indicated in note 8 the tube will properly handle a highlight with a diameter of 10% of picture height and with a luminance corresponding to 32 times peak signal white, I_{sp}.
16. As measured with a 50 mm Leitz Summicron lens having a sine response of approximately 85% at 400 TV lines at f : 5,6 and the appropriate filter inserted in the light path. The horizontal amplitude response can be raised by means of suitable correction circuits, which affect neither the vertical resolution nor the limiting resolution.
17. **Build-up lag**

    After 10 s of darkness. The figures are typical percentages of the ultimate signal current obtained 60 ms and 200 ms, respectively, after the introduction of the illuminance.

    Decay lag

    After the target has been illuminated for at least 5 s. The figures represent typical signals in percentages of the original signal current 60 ms and 200 ms, respectively, after removal of the illuminance.

18. A reduction of lag, especially under low key conditions is obtained when light bias is applied. Infrared light with a wavelength > 600 nm in the light bias should be avoided.
    a. For monochrome operation a light bias corresponding to 2 to 3 nA dark current is usually adequate for excellent speed of response.
    b. Adjustable light bias (colour camera).
    In a colour camera the speeds of response of the tubes can be balanced by adjusting the amount of light bias per tube.
    In a 3-tube colour camera for instance it is recommended to first adjust the tubes to their normal highlight signal current and beam current settings and then point the camera at a dark scene comprising a metronome. The moving hand of the metronome carries a small white square. The illuminance should be chosen such that the square produces a peak signal of approximately 50 nA in the green chrominance channel. A maximum of 3 nA artificial dark current shall then be introduced ingreen chrominance tube. Subsequently light bias shall be applied to the tubes in the red and blue channels until the lag of the three tubes is neutralized. A typical setting for correct speeds of response in a 3-tube colour camera would be approximately 3 nA(p) (R), 2nA(p) (G) and 3,5 nA(p) (B).
19. Deviation of the level of any of the four corners, i.e. 10% inwards in H and V direction from the level in the picture centre. With the settings suggested in note 18 black shading compensation in the camera video processing amplifier will not normally be required. Further improvement in lag can be obtained by applying still higher light bias levels. It may then be necessary to use black shading compensation in the video processing amplifier.

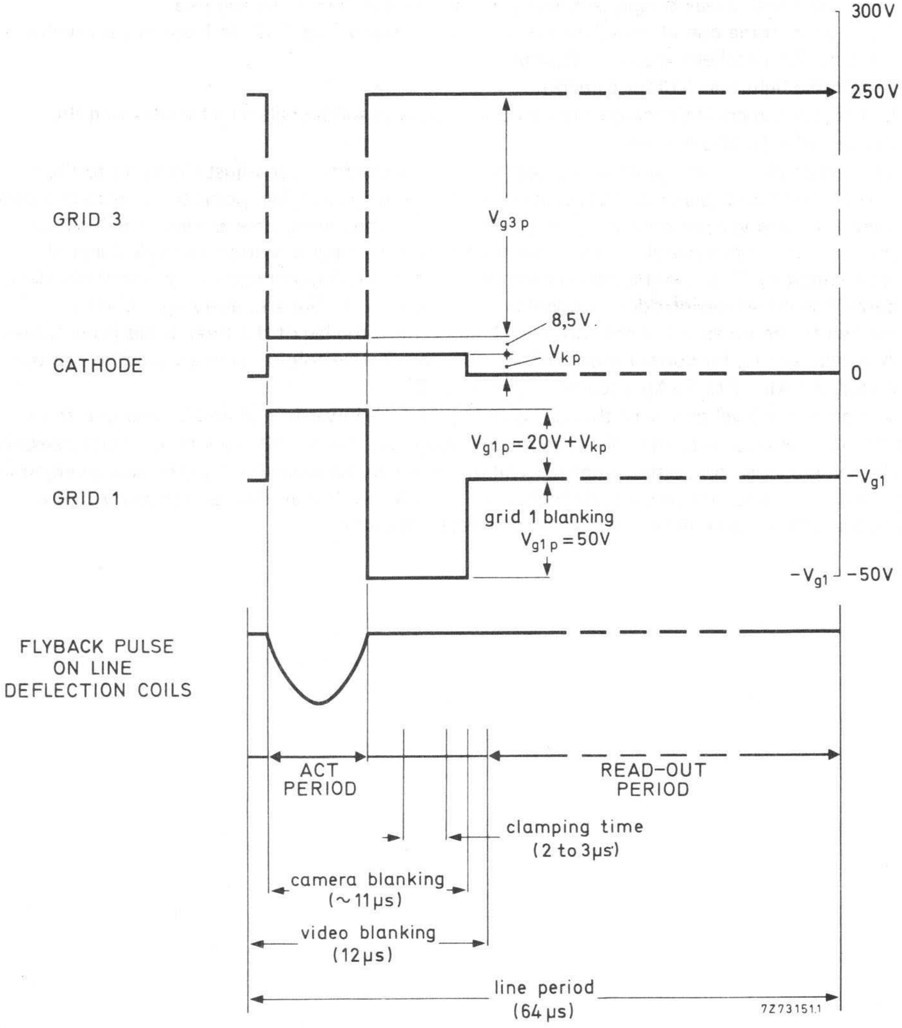

Fig. 1 Pulse timing and amplitude diagram.

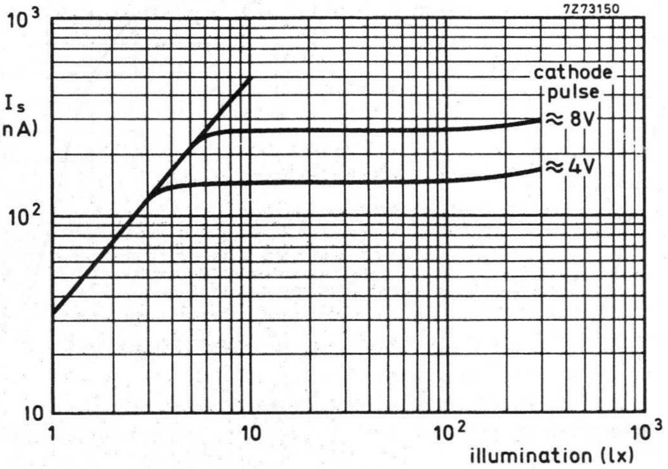

Fig. 2 Typical light transfer characteristics with ACT applied.

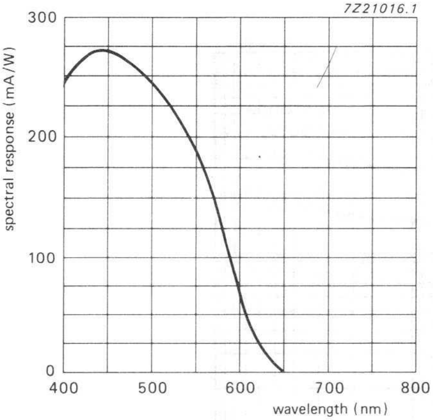

Fig. 3 Typical spectral response for XQ1500.

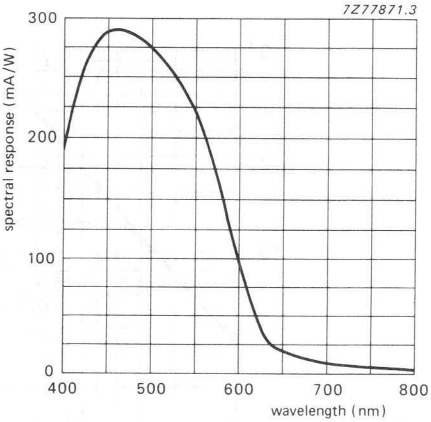

Fig. 4 Typical spectral response for XQ1503R.

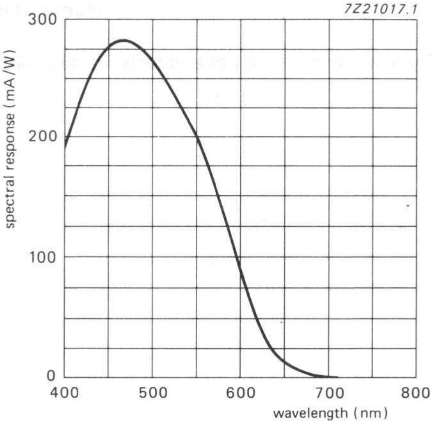

Fig. 5 Typical spectral response for XQ1505R.

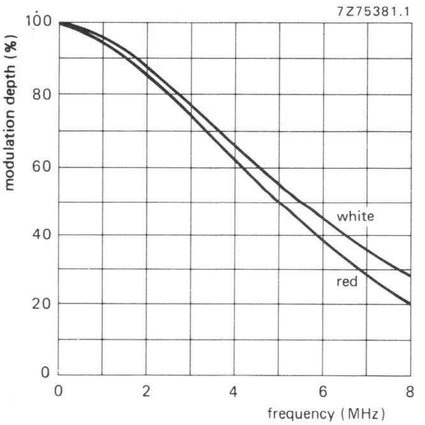

Fig. 6 Typical square-wave response curves for XQ1503R, XQ1505R.

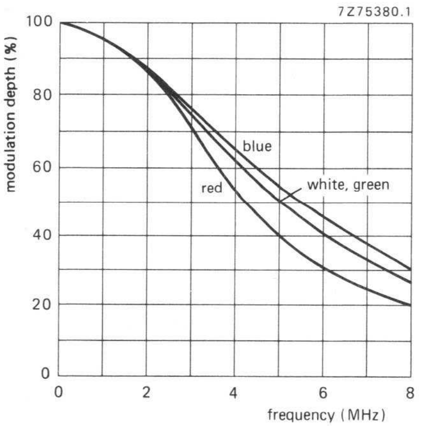

Fig. 6a Typical square-wave response curves for XQ1500.

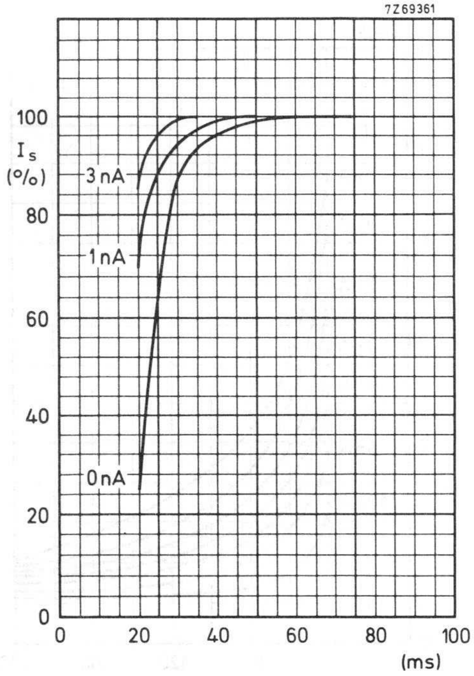

Fig. 7.

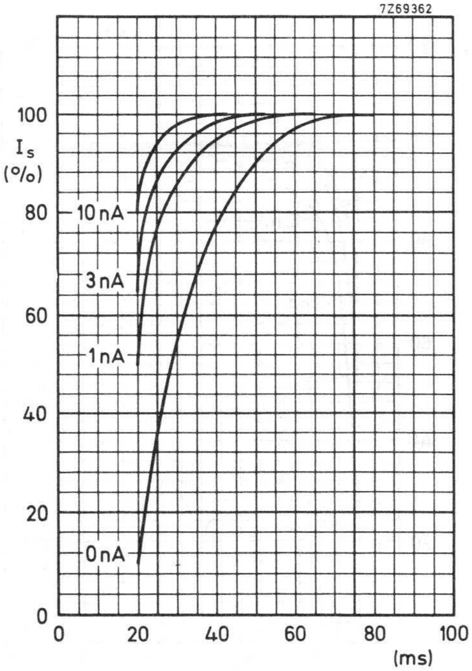

Fig. 8.

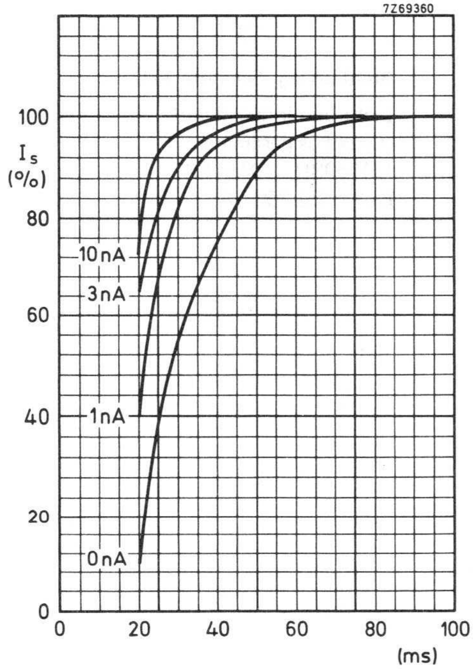

Fig. 9.

Build-up lag (see note 17)

Light bias induced dark current as parameter.

Fig. 7 XQ1500, XQ1500L, XQ1500G. I_s/I_b = 40/400 nA.

Fig. 8 XQ1500R. I_s/I_b = 20/200 nA.

Fig. 9 XQ1500B. I_s/I_b = 20/200 nA.

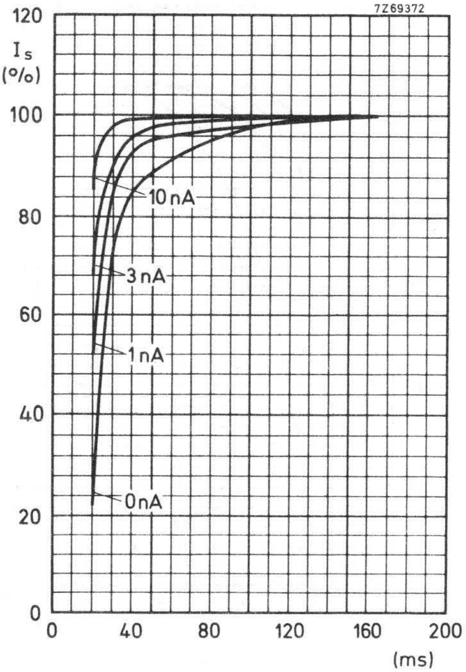

Fig. 10.

Build-up lag (See note 17)

Light bias induced dark current as parameter XQ1503R, XQ1505R; I_s/I_b = 20/200 nA.

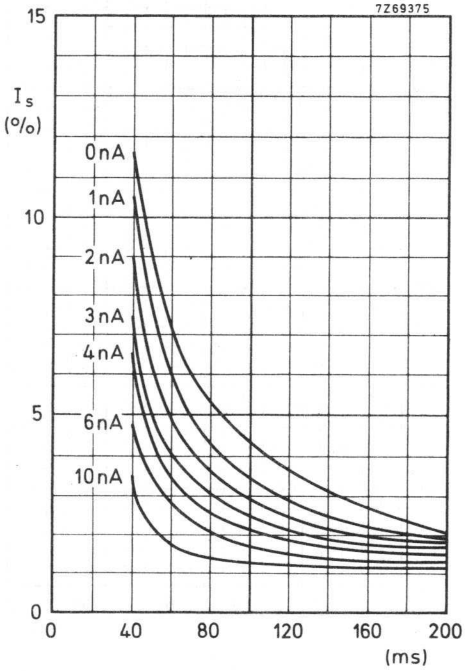

Fig. 11.

Decay lag (See note 17)

Light bias induced dark current as parameter XQ1503R, XQ1505R; I_s/I_b = 20/200 nA.

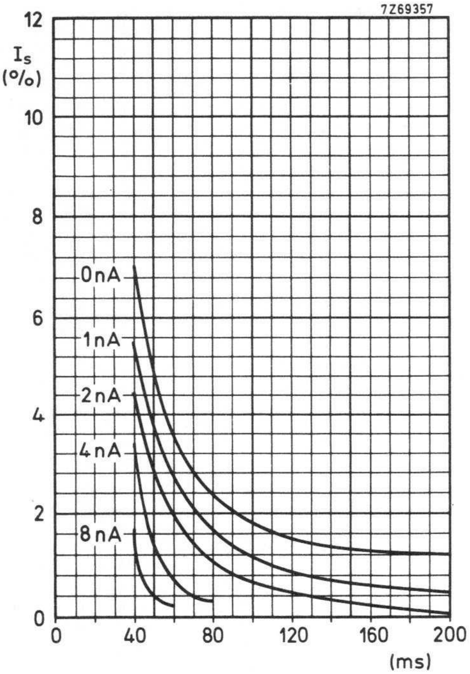

Fig. 12.

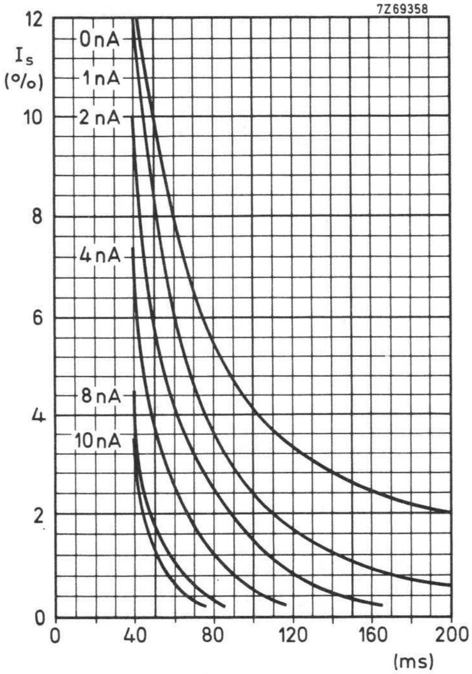

Fig. 13.

Decay lag (see note 17)

Light bias induced dark current as parameter

Fig. 12 XQ1500, XQ1500L, XQ1500G. I_s/I_b = 40/400 nA.

Fig. 13 XQ1500R. I_s/I_b = 20/200 nA.

Fig. 14 XQ1500B. I_s/I_b = 20/200 nA.

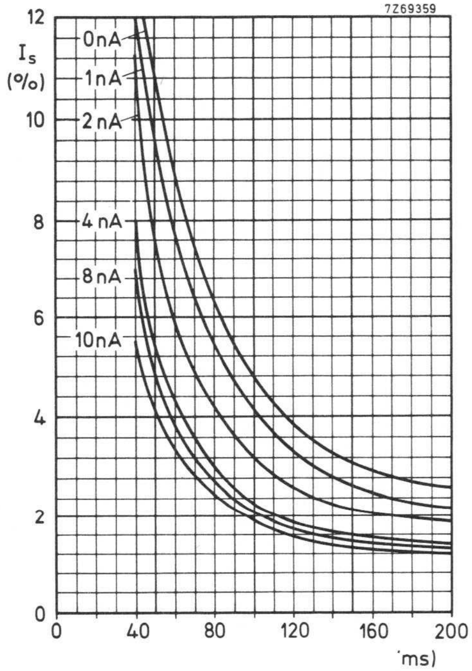

Fig. 14.

CAMERA TUBES

25,4 mm (1 inch) diameter Plumbicon® televison camera tubes, with high resolution lead-oxide photoconductive target, for use in high quality monochrome or colour cameras for broadcast, educational or industrial applications.

The XQ1510 series comprises the following versions:

XQ1510	for use in monochrome cameras
XQ1510L	for use in the luminance channel of colour cameras
XQ1510R	for use in the red channel
XQ1510G	for use in the green channel
XQ1510B	for use in the blue channel
XQ1513R	for use in the red channel; extended red response
XQ1515R	for use in the red channel; extended red response and IR filter

The tubes of the XQ1510 series are provided with ACT electron gun and provisions for light bias like the tubes of the XQ1500 series but are front loading types.

The electrical and mechanical data of the tubes are identical to those of the XQ1500 series with the following exceptions.

ELECTRICAL DATA

Capacitance

Signal electrode to all	C_{as}	3 to 5 pF

ACCESSORIES

Deflection and focusing coil unit	AT1116/06

® Registered trade mark for camera tube.

MECHANICAL DATA

Dimensions in mm

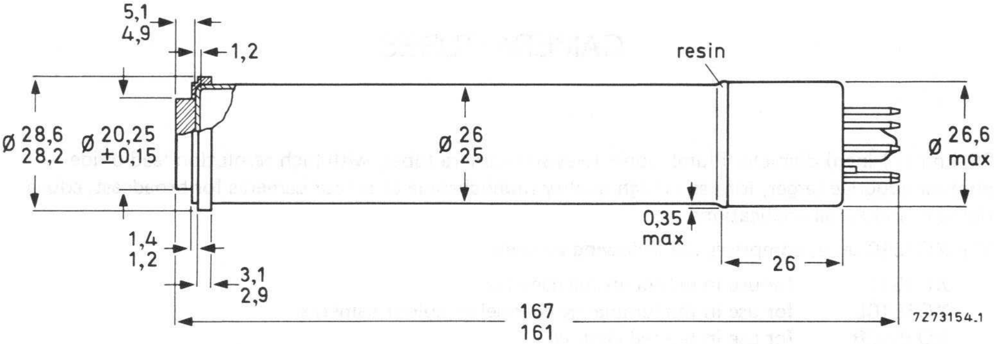

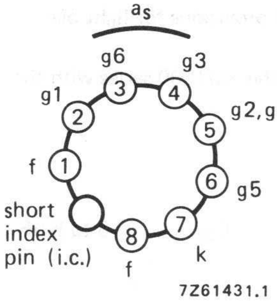

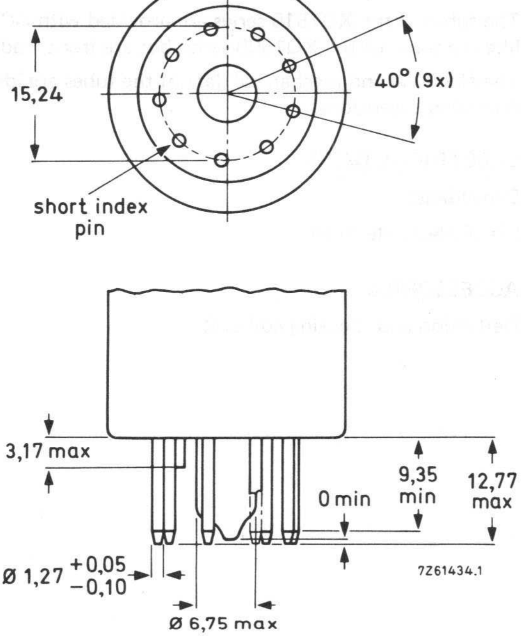

CAMERA TUBES

25,4 mm (1 inch) diameter Plumbicon® television camera tubes, with high resolution lead-oxide photoconductive target, for use in high quality monochrome or colour cameras for broadcast, educational or industrial applications.

The XQ2070 series comprises the following versions:

XQ2070	for use in monochrome cameras
XQ2070L	for use in the luminance channel of colour cameras
XQ2070R	for use in the red channel
XQ2070G	for use in the green channel
XQ2070B	for use in the blue channel
XQ2071	as XQ2070 series; only difference being the degree of freedom from blemishes on the target (industrial quality tubes)
XQ2073R	for use in the red channel; extended red response
XQ2074	as XQ2073. Industrial grade
XQ2075R	for use in the red channel; extended red response and IR filter
XQ2076	as XQ2075. Industrial grade

These tubes are available in rear loading (/02 and /05) and front loading (/03) versions.

Special features are:

- New photoconductive target for increased resolution,
- "Diode" electron gun with high beam reserve for dynamic beam control (DBC) to minimize comet-tailing and blooming (notes 1, 2, 3)
- Provision for light bias to reduce lag (except types XQ . . . . /05)

QUICK REFERENCE DATA

"Diode" electron gun		
Diameter		25,4 mm (1 inch)
Length	approx.	170 mm
Provided with anti-halation glass disc		
Focusing		magnetic
Deflection		magnetic
Useful target area (scanning area)		9,6 x 12,8 mm
Spectral response		
max. at	approx.	450 nm
cut-off: XQ2070	approx.	650 nm
XQ2073	approx.	850 to 950 nm
XQ2075	approx.	750 nm
Sensitivity		
XQ2070, XQ2070L	typ.	375 μA/lm
XQ2070R	typ.	70 μA/lmF
XQ2070G	typ.	155 μA/lmF
XQ2070B	typ.	40 μA/lmF
XQ2073R, XQ2075R	typ.	100 μA/lmF
Resolution at 400 TV lines (5 MHz)		
XQ2070, XQ2070L	typ.	60 %
XQ2070R	typ.	45 %
XQ2070G	typ.	60 %
XQ2070B	typ.	60 %
XQ2073R, XQ2075R	typ.	55 %
Heater		6,3 V, 95 mA

® Registered trade mark for television camera tubes.

MECHANICAL VARIANTS

notes

Variants are defined by a suffix as follows:

XQ . . . . /02, R,G,B,L: rear loading versions with provision for internal light bias, target contact ring with 2 target contacts, metal sleeve on pumping stem to mount bias lamp.

XQ . . . . /03, R,G,B,L: front loading versions with provision for internal light bias, metal ring target contact, metal sleeve on pumping stem to mount bias light lamp.

XQ . . . . /05, R,G,B,L: as/02, however without provision for light bias.

OPTICAL DATA

Quality rectangle on photoconductive target (aspect ratio 3 : 4)	9,6 x 12,8 mm

Orientation of image on target:

For correct orientation of the image on the target the vertical scan should be essentially parallel to the plane passing through the tube axis and the marker line on the protecting sleeve at the base.

Faceplate	
Thickness	1,2 ± 0,1 mm
Refractive index	n = 1,49
Anti-halation glass disc provided with anti-reflective coating	
Thickness	5 ± 0,1 mm
Refractive index	n = 1,52

XQ2075R is provided with infrared reflecting filter

ACCESSORIES

Socket	type 56605		
Deflection and focusing coil unit:	rear loading	front loading	
Black/white	type AT1126/03S	AT1116/06S	
Colour	type AT1126/03T	AT1116/06T	
Mask for flare reduction	type 56028		
Light bias lamp in holder for versions /02 and /03	type 56106		4

ELECTRICAL DATA

Deflection		magnetic
Focusing		magnetic
Heating, indirect by a.c. or d.c.; parallel supply		
Heater voltage	V_f	6,3 V ± 5%
Heater current at V_f = 6,3 V	I_f nom.	95 mA

The heater current and the heater voltage must not exceed r.m.s. values of 150 mA and 9,5 V. For optimum performance (lifetime and registration stability) stabilization of the heater voltage is recommended.

Capacitance		
Signal electrode to all		
rear loading types	C_{as}	2,5 to 4 pF
front loading types	C_{as}	3 to 5 pF

This capacitance, which is effectively the output impedance, increases when the tube is inserted in the coil unit.

LIMITING VALUES (Absolute maximum rating system)

Unless otherwise stated, all voltages are referred to the cathode.

					notes
Signal electrode voltage	V_{as}	max.	50	V	
Grid 4 voltage	V_{g4}	max.	1100	V	
Grid 3 voltage	V_{g3}	max.	800	V	
Voltage between grid 4 and grid 3	$V_{g4/g3}$	max.	450	V	
Grid 2 voltage	V_{g2}	max.	340	V	
Grid 1 voltage,					
positive	V_{g1}	max.	25	V	
negative	$-V_{g1}$	max.	200	V	
Grid 1 current (≈ I_k current)	I_{g1}	max.	5	mA	
Grid 1 current (peak to peak with DBC)	I_{g1p}	max.	8	mA	2
Cathode heating time before drawing cathode current	t_h	min.	1	min	
Cathode to heater voltage					
positive peak	V_{kfp}	max.	125	V	
negative peak	$-V_{kfp}$	max.	50	V	
Cathode heating time before drawing current	t_h	min.	1	min	
External resistance between cathode and heater at $V_{kfp} > 10$ V	R_{kf}	min.	2	kΩ	
Ambient temperature, storage and operation	T_{amb}	max.	50	°C	
		min.	−30	°C	
Faceplate temperature, storage and operation	T	max.	50	°C	
		min.	−30	°C	
Faceplate illuminance	E	max.	500	lx	5

OPERATING CONDITIONS 6

				notes
For a scanned area of 9,6 x 12,8 mm				
Cathode voltage	V_k	0	V	
Signal electrode voltage	V_{as}	45	V	
Beam current	I_b			7
Grid 4 voltage	V_{g4}	960	V	
Grid 3 voltage	V_{g3}	600	V	
Grid 2 voltage	V_{g2}	300	V	
Grid 1 voltage	V_{g1}		V	7
Blanking voltage on grid 1, peak to peak	$V_{g1p\text{-}p}$	25	V	
Faceplate illuminance	E	0 to 10	lx	8
Faceplate temperature	T	20 to 45	°C	9

ELECTRON GUN CHARACTERISTICS

Cut off					
Grid 1 voltage for cut-off at $V_{g2} = 300$ V, without blanking	V_{g1}		−10 to 0	V	
Grid 1 voltage for normal beam setting	V_{g1w}	⩽	15	V	
Blanking voltage, peak to peak					
on grid 1	$V_{g1p\text{-}p}$		25	V	
on cathode	$V_{kp\text{-}p}$		25	V	
Grid 1 current at normally required beam currents	I_{g1}	⩽	1,5	mA	2
Grid 2 current at normally required beam currents	I_{g2}	⩽	0,1	mA	2

PERFORMANCE

				notes
Dark current	I_d	≤ 2	nA	
Sensitivity at colour temperature of illuminance = 2856 K				10
XQ2070,L	min. 300	typ. 375	μA/lm	
XQ2070R	min. 63	typ. 70	μA/lmF	
XQ2070G	min. 130	typ. 155	μA/lmF	
XQ2070B	min. 35	typ. 40	μA/lmF	
XQ2073R, XQ2075R	min. 80	typ. 100	μA/lmF	
Gamma of transfer characteristics		0,95 ± 0,05		
Spectral response, max. at		450	nm	
Spectral response, cut-off at		650 to 950	nm	
Spectral response curves	see Figs 1, 2, 3			

Resolution 11

Modulation depth, i.e. uncompensated amplitude response at 400 TV lines at the centre of the picture.

	XQ2070,L XQ2070G	XQ2070R	XQ2070B	XQ2073R XQ2075R	7,11
Highlight signal current I_s	200	100	100	100	nA
Beam current I_b	400	200	200	200	nA
Modulation depth at 400 TV lines					
typ.	60	45	60	55	%
min.	55	40	55	50	%

Modulation transfer characteristics: see Figs 4 and 5

Lag (typical values, with light bias of 3 nA) 4,12

Light source with a colour temperature of 2856 K. Appropriate filter inserted in the light path for the chrominance tubes R, G and B

LOW KEY CONDITIONS

	build-up lag		decay lag	
	I_s/I_b = 20/300 nA		I_s/I_b = 20/300 nA	
	60 ms	200 ms	60 ms	200 ms
XQ2070	95%	≈ 100%	9%	2,5%
XQ2070G	95%	≈ 100%	9%	2,5%
XQ2070R	95%	≈ 100%	9%	2,5%
XQ2070B	90%	≈ 100%	12%	4%
XQ2073R, XQ2075R	90%	≈ 100%	11%	3%

Shading of light bias induced dark current	12,5%	14
Highlight handling capacity with DBC		15

MECHANICAL DATA

Rear loading tubes XQ2070/02

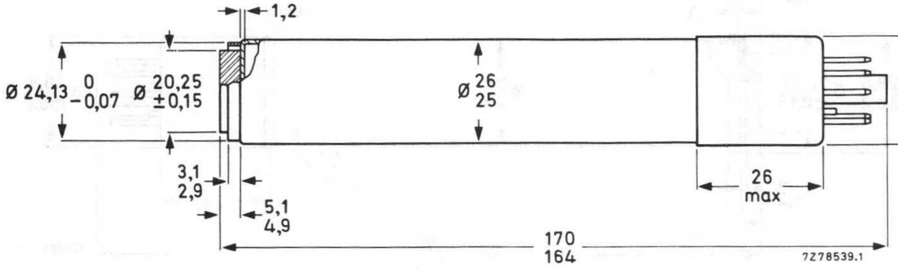

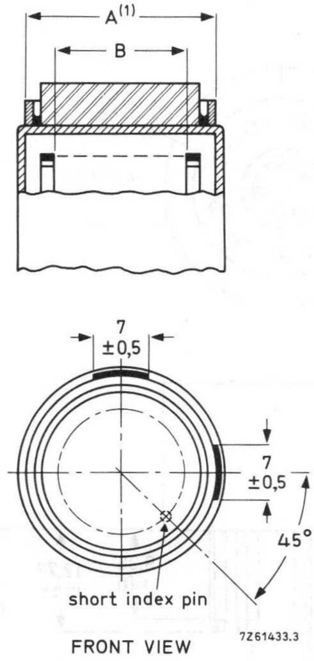

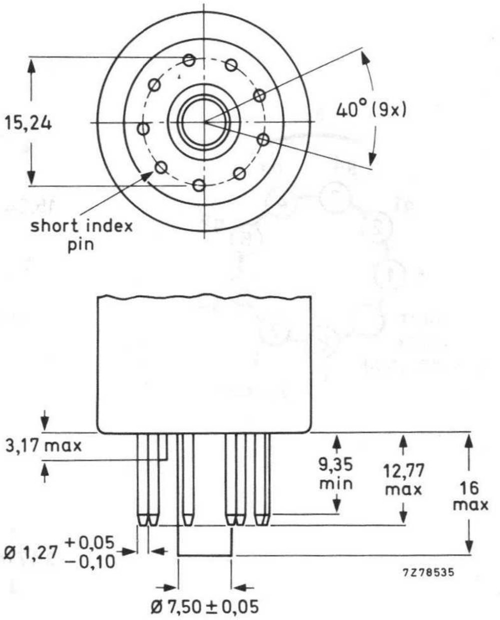

(1) The distance between the geometrical centres of diameter A of the reference ring and diameter B of the mesh electrode ring is < 100 μm.

Mounting position: any

Mass: ≈ 70 g

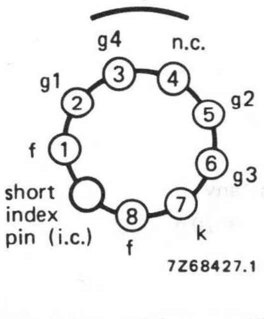

Front loading tubes XQ2070/03

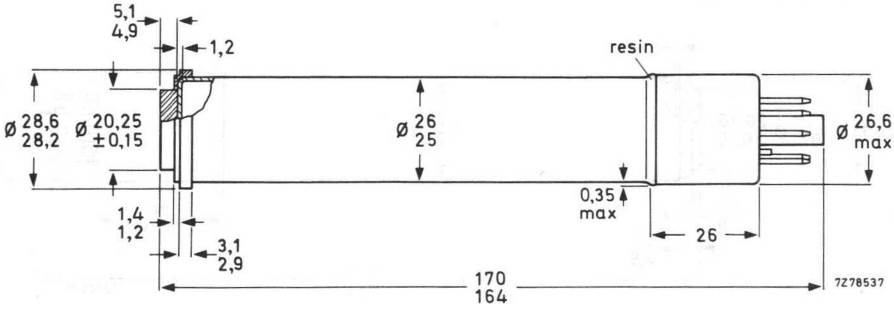

7Z78537

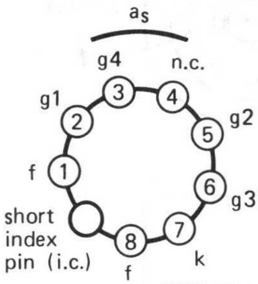

7Z68427.1

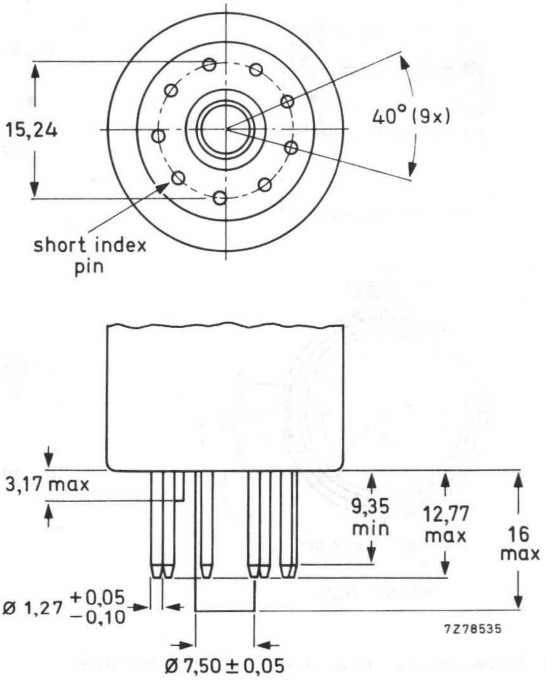

7Z78535

Mounting position: any

Mass: ≈ 70 g

Rear loading tubes XQ2070/05

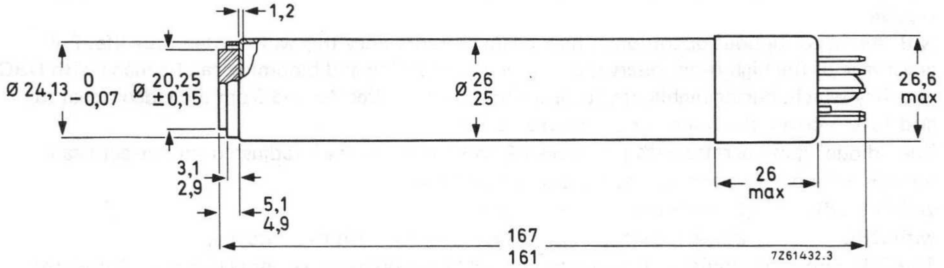

7Z61432.3

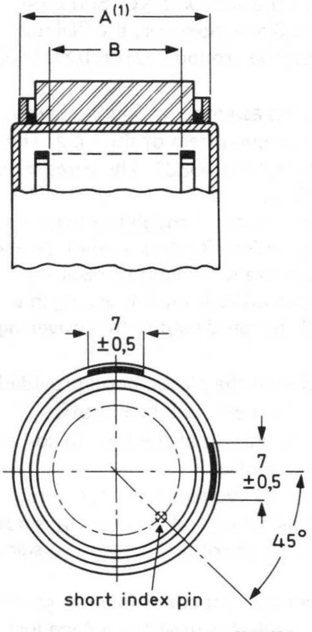

FRONT VIEW

7Z61433.3

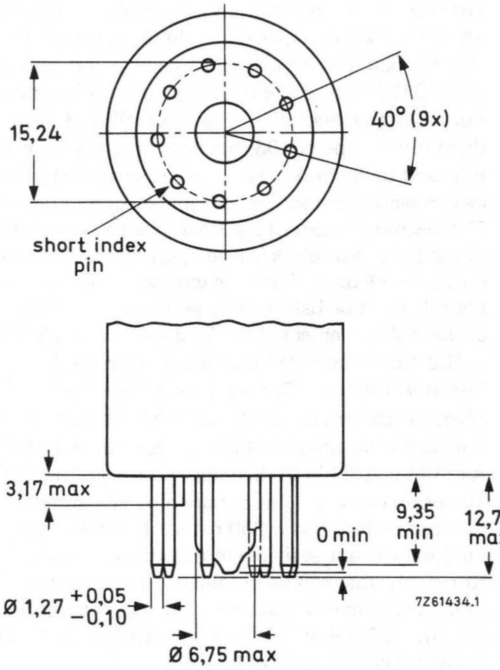

7Z61434.1

(1) The distance between the geometrical centres of diameter A of the reference ring and diameter B of the mesh electrode ring is < 100 μm.

Mounting position: any

Mass: ≈ 70 g

Base: IEC 67-I-33a (JEDEC E8-11)

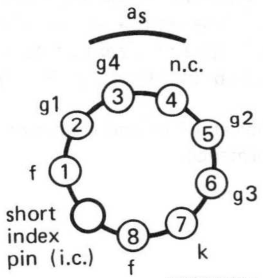

7Z68427.1

NOTES, see also General Section

1. "Diode" electron gun is a triode gun operating in a diode mode, providing a very high beam reserve.
   N.B. Avoid continuous operation at high beam currents since this will shorten tube life. Full advantage of the high beam reserve to reduce comet-tailing and blooming can be made with DBC circuitry which, during highlights, feeds positive-going pulses derived from the video signal to grid 1, to increase the beam current momentarily.
2. The "diode" gun operates with a positive ($\leqslant$ 15 V) grid 1 voltage (adjusted for correct beam settings, see note 7), hence draws some grid 1 current:
   without DBC: $\leqslant$ 1,5 mA (peak) with blanking
   with DBC: $\leqslant$ 8 mA (peak) with blanking measured with oscilloscope.
   The DBC circuitry should, in the case of highlights, supply positive-going pulses of 7 V above V_{g1w} (see note 12) and up to 8 mA peak to grid 1.
   N.B. Applying higher pulses than 7 V is not recommended since this will shorten tube life, impair resolution and may introduce oscillations.
3. The rear loading tubes closely resemble mechanically the tubes of the XQ1080/XQ1500 series. The front loading types resemble the tubes of the XQ1070 series. Since, however, the "Diode" electron gun draws some grid 1 current (see note 2), cameras designed around XQ1080/XQ1500 and XQ1070 tubes will require some modification.
4. For adjustable light bias in versions /02 and /03. The light bias lamp assembly as supplied with these tubes, type 56106, fits in the metal tube cemented to the pumping stem of the tube. The tube and the light bias lamp assembly will fit properly in the socket, type 56605 The wires should be connected to a source, capable of supplying max. 110 mA at 5 V.
   The desired amount of light bias can be obtained by adjusting the current through the filament of the lamp. For black/white operation a light bias corresponding to 2 to 3 nA extra dark current is usually adequate for excellent speed of response. In a colour camera the speeds of response of the tubes can be balanced by adjusting the amount of light bias per tube. A typical setting in a 3-tube colour camera could be 3 nA (R), 2 nA (G), and 6 nA (B). Infrared light with a wavelength > 600 nm in the light bias should be avoided.
5. For short intervals. During storage the tube face shall be covered with the plastic hood provided; when the camera is idle the lens shall be capped, in stand-by also the beam will be cut-off.
6. The operating conditions and performance data quoted relate to operation of the tube in coil unit AT1126 and AT1116. See relevant data of deflection/focusing assemblies.
7. The beam current I_b, as obtained by adjusting the control grid (grid 1) voltage is set for 1 stop over peak white and is 200 nA for R and B tubes, 400 nA for black/white and G tubes. I_b is not the total current available in the scanning beam, but is defined as the maximum amount of signal current, I_s, that can be obtained with this beam.
   In the performance figures e.g. for lag, the signal current and beam current conditions are given as I_s/I_b = 20/300 nA. This means: with a signal current of 20 nA and a beam setting which just allows a signal current of 300 nA.
8. Typical faceplate illumination level for the XQ2070 and XQ2070L to produce 200 nA signal current will be approx. 4,6 lx. The signal currents stated for the colour tubes R, G and B will be obtained with an incident white light level (2856 K) on the filter of approx. 11 lx. These figures are based on the filters described in note 10. For filter BG12, however, a thickness of 1 mm is chosen.
9. The tube can withstand short excursions up to 70 °C without damage or irreversible degradation in performance.

10. Measuring conditions: illuminance level approx. 4,54 lx at a colour temperature of 2856 K and the appropriate filter inserted in the light path. Filters used are:

XQ2070R, XQ2075R	Schott	OG570	thickness	3 mm
XQ2070G	Schott	VG9	thickness	1 mm
XQ2070B	Schott	BG12	thickness	3 mm
XQ2073R	Schott	OG570	thickness	3 mm
and	Calflex	B1/K1		

For transmission curves see General Section.

11. As measured with a 50 mm Leitz Summicron lens having a sine response of approximately 85% at 20,6 lp/mm (400 TV lines at 9,6 mm picture height) at f : 5,6 and the appropriate filter inserted in the light path. The amplitude response can be raised by means of suitable correction circuits.
12. Adjusted for sum of dark current, leakage current and light bias current of 3 nA.
13. **Build-up lag**

    After 10 s of darkness. The figures are typical percentages of the ultimate signal current obtained 60 ms and 200 ms, respectively, after the introduction of the illuminance.

    Decay lag

    After the target has been illuminated for at least 5 s. The figures represent typical signals in percentages of the original signal current 60 ms and 200 ms, respectively, after removal of the illuminance.
14. Deviation of the level of any of the four corners, i.e. 10% inwards in L and V direction, from the level in the picture centre. The observed shading is composed of slight parabolic and sawtooth components in both line and frame direction which can be sufficiently compensated by suitable black shading compensation circuitry.
15. a. With DBC applied (see note 2) the tube will properly handle highlights with a diameter of 10% of the picture height and with a brightness corresponding to 16 times peak signal white, I_{sp}.

    b. The maximum peak signal currents in the case of highlights will be 2,5 μA. Video preamplifiers should be designed to accomodate these.

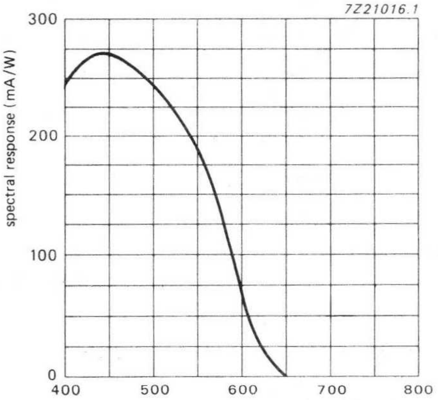

Fig. 1 Typical spectral response for XQ2070,L,R,G,B.

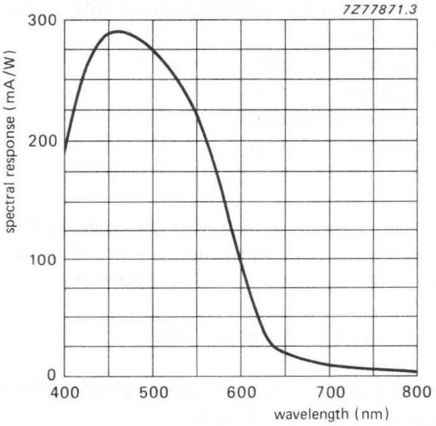

Fig. 2 Typical spectral response for XQ2073R.

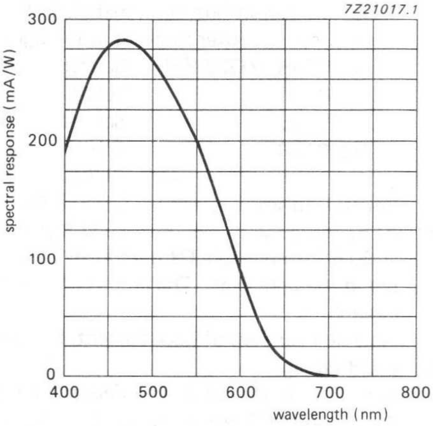

Fig. 3 Typical spectral response for XQ2075R.

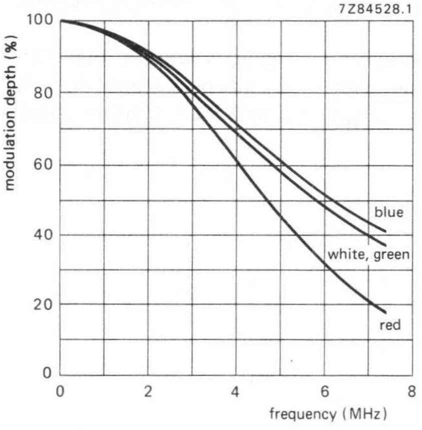

Fig. 4 Typical square-wave response curves for XQ2070.

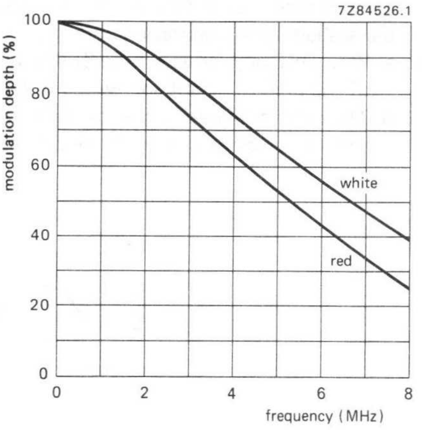

Fig. 5 Typical square-wave response curves for XQ2073-XQ2075.

CAMERA TUBES

25,4 mm (1 inch) diameter Plumbicon® television camera tubes with high resolution lead-oxide photoconductive target, exclusively for use with X-ray image intensifiers with P20 output phosphor in medical equipment.

The XQ2172 series comprises the following versions:

XQ2172/02	Rear loading, with target centring ring and standard anti halation glass disc.
XQ2172/03	Front loading, with metal ring, without anti-halation glass disc.
XQ2172/03X	Front loading, with metal ring and BG18 anti-halation glass disc.

Special features are:

- New photoconductive target for increased resolution;
- "Diode" electron gun with special cathode for high beam current operation, improved beam acceptance and low lag;
- Provision for light bias to reduce lag.

QUICK REFERENCE DATA

"Diode" electron gun	
Diameter	25,4 mm (1 in)
Length	approx. 170 mm
Focusing	magnetic
Deflection	magnetic
Useful target area, circle diameter	16,2 mm
Spectral response	
maximum at	≈ 470 nm
cut-off at	≈ 850 to 950 mm
Sensitivity with P20 light source	
XQ2172/02	typ. 440 μA/lmF
XQ2172/03	typ. 490 μA/lmF
XQ2172/03X	typ. 465 μA/lmF
Resolution	typ. 60%
Heater	6,3 V, 190 mA

® Registered Trade Mark for television camera tube.

OPTICAL DATA

Dimensions of quality area on photoconductive target	circle, dia. 16,2 mm

Orientation of image on target

For correct orientation of the image on the target the vertical scan should be essentially parallel to the plane passing through the tube axis and the mark on the tube base.

Faceplate	
thickness	1,2 mm
refractive index	1,49
Standard anti-halation glass disc (XQ2172/02)	
thickness	5 mm
refractive index	1,52
BG18 anti-halation glass disc (XQ2172/03X)	
thickness	1,07 mm
refractive index	1,54

ACCESSORIES

Socket	type 56605
Deflection and focusing coil unit,	
XQ2172/02	AT1126/03S
XQ2172/03 (X)	AT1116S

ELECTRICAL DATA

Deflection	magnetic
Focusing	magnetic

Heating

Indirect by a.c. or d.c.

Heater voltage	V_f	6,3 V ± 5%
Heater current, at $V_f = 6,3$ V	I_f	190 mA

The heater voltage must not exceed 9,5 V r.m.s. For optimum performance stabilization of the heater voltage is recommended.

Capacitance

Signal electrode to all	
XQ2172/02	2,5 to 4 pF
XQ2172/03	3 to 5 pF

These capacitances, which are effectively the output impedances, increase when the tubes are inserted in the coil unit.

LIMITING VALUES (Absolute maximum rating system)

All voltages are referred to the cathode, unless otherwise stated.

				notes
Signal electrode voltage	V_{as}	max.	50 V	
Grid 4 voltage (mesh)	V_{g4}	max.	1100 V	
Grid 3 voltage	V_{g3}	max.	800 V	
Voltage between grid 4 and grid 3	$V_{g4/g3}$	max.	450 V	
Grid 2 voltage	V_{g2}	max.	350 V	
Grid 1 voltage, positive	V_{g1}	max.	20 V	
Grid 1 voltage, negative	$-V_{g1}$	max.	200 V	
Grid 1 current (≈ cathode current)	I_{g1}	max.	10 mA	3
Cathode to heater voltage, positive peak	$V_{kf\,p}$	max.	50 V	
Cathode to heater voltage, negative peak	$-V_{kfp}$	max.	125 V	
Cathode heating time before drawing cathode current	t_h	min.	1 min	
External resistance between cathode and heater at $V_{kf\,p} > 10$ V	R_{kf}	min.	2 kΩ	
Ambient temperature, storage and operation	T_{amb}	max. min.	50 °C −30 °C	
Faceplate temperature, storage and operation	T	max. min.	50 °C −30 °C	4
Faceplate illuminance	E	max.	500 lx	5

OPERATING CONDITIONS AND PERFORMANCE

Conditions

			notes
Conditions			6
Cathode voltage	V_k	0 V	
Signal electrode voltage	V_{as}	45 V	
Beam current	I_b		7, 8
Grid 4 voltage	V_{g4}	960 V	9
Grid 3 voltage	V_{g3}	600 V	9
Grid 2 voltage	V_{g2}	300 V	
Grid 1 voltage	V_{g1}	0 to 20 V	
Blanking voltage on grid 1, peak to peak	$V_{g1\ p\text{-}p}$	30 V	
Focusing coil current			6
Deflection and alignment currents			6
Faceplate illuminance (P20 light source)	E	0 to 10 lx	
Faceplate temperature	T	20 to 45 °C	

ELECTRON GUN CHARACTERISTICS

Grid 1 voltage for cut-off at $V_{g2} = 300$ V	V_{g1}	−10 to 0 V
Grid 1 voltage for normal beam setting	V_{g1w}	≤ 20 V
Grid 1 current at normally required beam currents	I_{g1}	≤ 5 mA
Grid 2 current at normally required beam currents	I_{g2}	≤ 0,1 mA
Blanking voltage, peak to peak, with respect to V_{g1w}	$V_{g1\ p\text{-}p}$	30 V

Performance

Dark current	I_d		< 2 nA	
Sensitivity at colour temperature of 2856K				10
XQ2172/02		min. 130	typ. 145 µA/lmF	
XQ2172/03		min. 145	typ. 155 µA/lmF	
XQ2172/03X		min. 90	typ. 110 µA/lmF	
Sensitivity with P20 light source				
XQ2172/02		min. 395	typ. 440 µA/lm	
XQ2172/03		min. 440	typ. 490 µA/lm	
XQ2172/03X		min. 400	typ. 465 µA/lm	
Peak signal current with E = 1 lx (P20)				11
XQ2172/02	I_{sp}	min. 185	typ. 205 nA	
XQ2172/03	I_{sp}	min. 210	typ. 225 nA	
XQ2172/03X	I_{sp}	min. 185	typ. 215 nA	
Peak signal current (16,2 mm dia scanning)			2000 nA	7

Gamma of transfer characteristic	0,95 ± 0,05	
Spectral response:		
max. response at	≈ 470 nm	
cut-off at	800 to 950 nm	
response curves	see Fig. 4	
Resolution		12
Modulation depth i.e. uncompensated amplitude response at 20,3 lp/mm (scanned area 9,6 x 12,8 mm) at the centre of the picture (5 MHz, 400 TV lines)	min. 50 % typ. 60 %	
Modulation depth at 12 lp/mm (scanned area 16,2 mm diameter) at the centre of the picture (5 MHz 400 TV lines)	min. 70 % typ. 80 %	
Modulation transfer characteristic, see Fig. 7		
Decay lag (no light bias applied) Fig. 6		13
Residual signal after dark pulse of 60 ms	max. 18 % typ. 12 %	14
Residual signal after dark pulse of 200 ms	max. 7 % typ. 4,5 %	
Build-up lag (no light bias applied) Fig. 5		13
Signal current after 60 ms illumination	min. 50 % typ. 95 %	15

260 x 400 x

MECHANICAL DATA

Rear loading tubes XQ2172/02

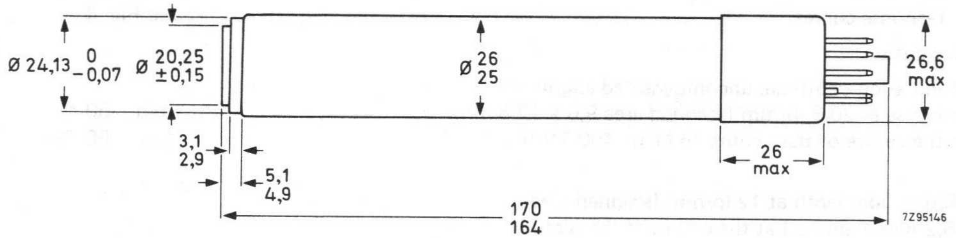

Front loading tubes XQ2172/03

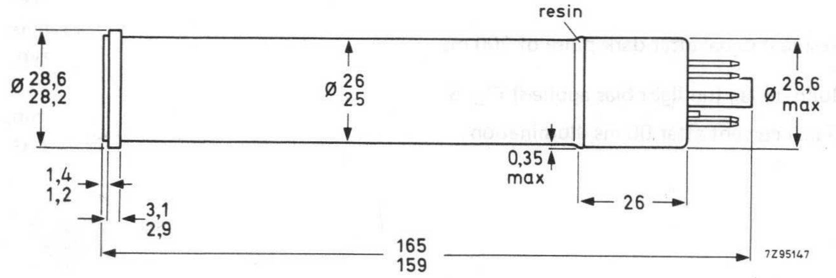

Front loading tubes XQ2172/03X

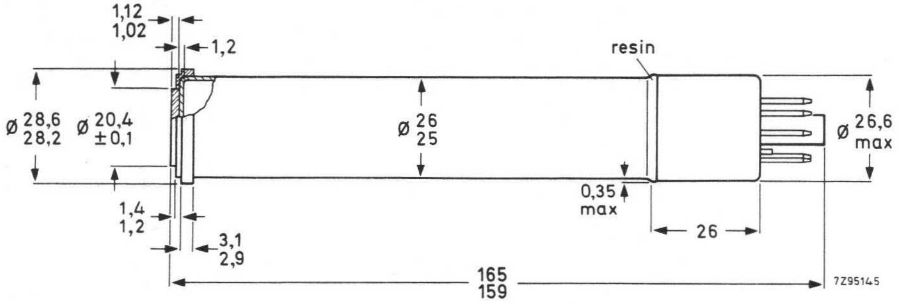

Fig. 1.

Mounting position:	any
Mass:	≈ 70 g
Base:	IEC 67-I-33a (JEDEC E8-11)

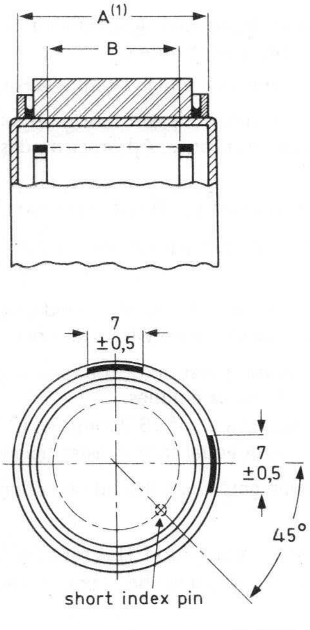

FRONT VIEW

XQ2172/02

Fig. 2a.

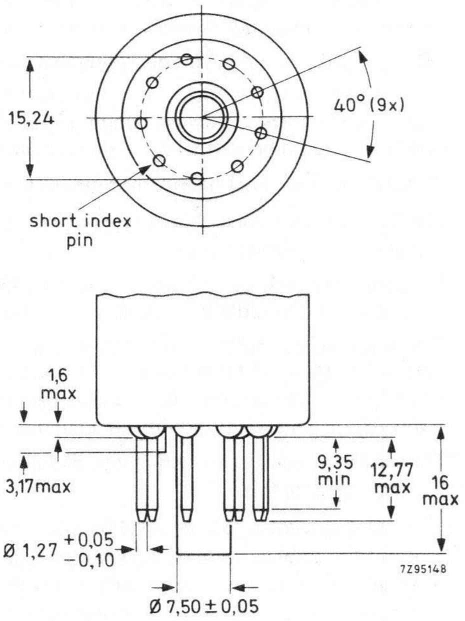

Fig. 2b.

(1) The distance between the geometrical centres of diameter A of the reference ring and diameter B of the mesh electrode ring is < 100 μm.

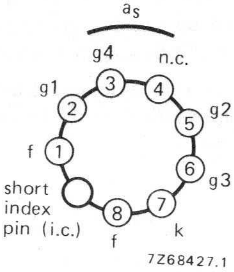

Fig. 2c.

NOTES, see also General Section

1. The "Diode" gun operates with a positive grid 1 voltage, hence draws some grid current. The grid 1 voltage (d.c.) must be adjusted for correct beam current as described in note 8.
2. "Diode" gun is a triode gun operating in a diode mode, providing a very high beam reverse.

   Continuous operation with a high beam setting is to be avoided since this will shorten tube life. High I_b settings should be used under high light intensity conditions only. All other modes of operation should be normal I_b settings or have them cut off.
3. A current limiter must be incorporated to limit total cathode current to 10 mA maximum.
4. The tube can withstand short excursions up to 70 °C without any damage or irreversible degradation in performance.
5. For short intervals. During storage the tube face shall be covered with the plastic hood provided; when the camera is idle the lens shall be capped, in stand-by also the beam will be cut-off.
6. The operating conditions and performance data quoted, relate to operation of the tube in coil units AT1116 or AT1126. See relevant data of deflection/focusing assemblies.
   Scanning amplitude should be adjusted such that the useful target area of 16,2 mm dia. is displayed on a standard monitor as a circular area with a diameter equal to the raster height.
7. The maximum peak signal which can be handled is 3 μA. Video amplifiers should be designed to accommodate this.
8. The beam current I_b, as obtained by adjusting the control grid voltage (grid 1) is set at 400 nA. I_b is not the total current available in the scanning beam, but is defined as the maximum amount of signal current I_s, that can be obtained with this beam.
   In the performance figures, e.g. for resolution and lag, the signal current and beam current conditions are given, e.g. as I_s/I_b = 20/300 nA. This means: with a signal current of 20 nA and a beam setting which just allows a signal current of 300 nA.

   N.B. The signal currents are measured with an integrating instrument connected in the signal electrode lead and a uniform illumination of the scanned area. See note 11.
9. The optimum voltage ratio V_{g4}/V_{g3} to minimize beam landing errors (preferably $\leqslant$ 1 V) depends on the type of coil unit used. For types AT1116 and AT1126 a ratio of 1,6 is recommended. Grid 4 (mesh) should under no circumstances be allowed to operate at a voltage below that of grid 3 as that might damage the target.
10. Measuring conditions: illuminance level 4,54 lx at a colour temperature of 2856K and filters. Schott VG9 and Calflex B1/K1 inserted in the light path. For transmission of the filters, see General Section.

NOTES (continued)

11. The peak signal currents are measured on a waveform oscilloscope and with a uniform illumination on the 16,2 mm Ø target area.
    When measured with an integrating instrument connected in the signal-electrode lead the average signal currents will be smaller:
    a. By a factor α ($\alpha = \frac{100 - \beta}{100}$), β being the total blanking time in %; for the CCIR system α amounts to 0,75.
    b. By a factor δ, δ being the ratio of the active target area (circle with: 16,2 mm Ø) to the area which would correspond with the adjusted scanning amplitude (16,2 mm x 21,6 mm) this ratio amounts to $\delta = 0{,}59$.
    The total ratio of integrated signal current, I_s, to the peak signal current, I_{sp}, amount to $\alpha \times \delta = 0{,}44$.
12. As measured with a 50 mm Leitz Summicron lens having a sine response of approximately 85% at 400 TV lines at f:5,6. The published 60% typ. is uncorrected. Tube resolution is higher. Measured with 200 nA signal current and a beam current just sufficient to stabilize a signal current of 400 nA. The horizontal amplitude response can be raised by means of suitable correction circuits, which affect neither the vertical resolution nor the limiting resolution.
13. Measured with a 20 nA signal current and a beam current just sufficient to stabilize a signal current of 300 nA.
14. **Decay lag.** After a minimum of 5 s of illumination of the target. Values and curves shown relating to decay lag represent the residual signal currents in percentages of the original signal current as a function of time, after the illumination has been removed.
15. **Build-up lag.** After 10 s of complete darkness. Values and curves shown relating to build-up lag represent the typical percentages of the ultimate signal obtained as a function of time, after the illumination has been applied.

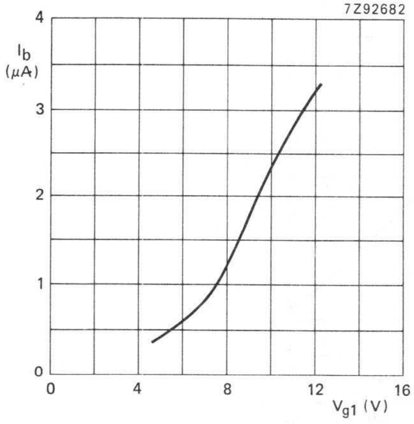

Fig. 3 Average beam current versus grid 1 voltage (see note 11).

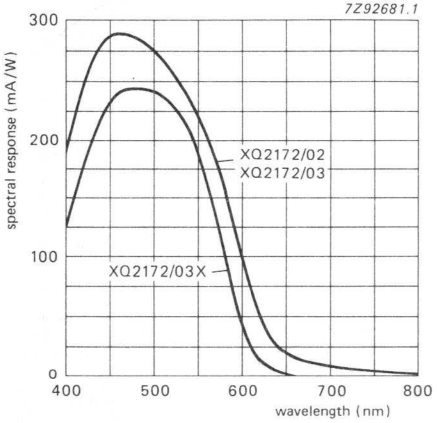

Fig. 4 Typical spectral response curves.

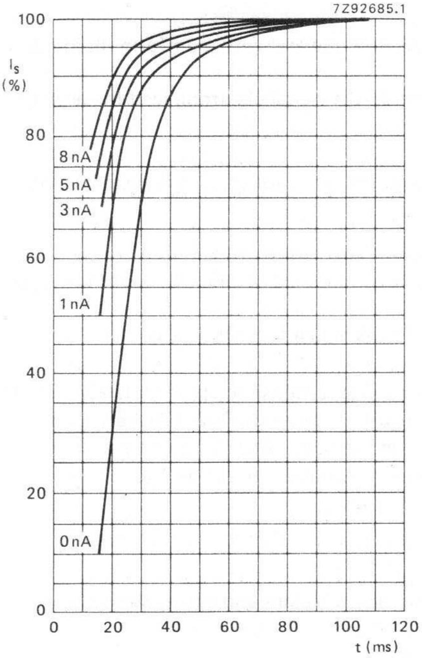

Fig. 5 Build-up lag, see note 15.
Light-bias induced dark current as parameter.
I_s/I_b = 20/300 nA.

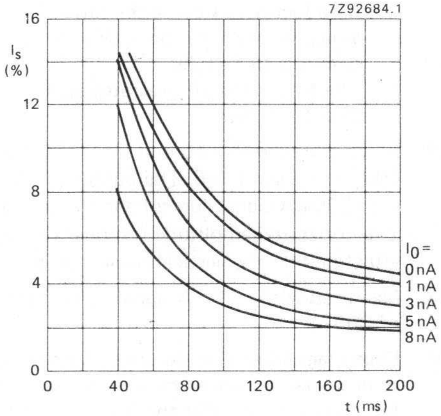

Fig. 6 Decay lag, see note 14.
I_s/I_b = 20/300 nA.

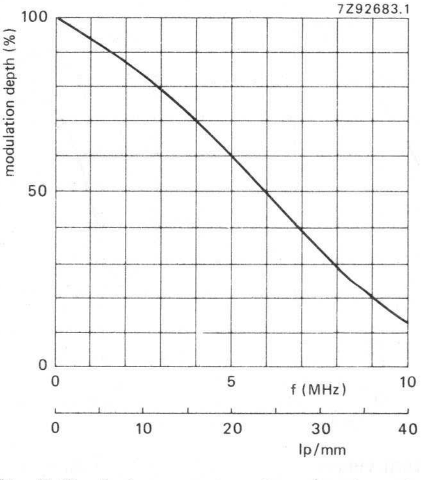

Fig. 7 Typical square-wave transfer characteristic.

CAMERA TUBES

25,4 mm (1 in) diameter Plumbicon® television camera tubes, with high resolution lead-oxide photoconductive target, for use in high quality monochrome or colour cameras for broadcast, educational or industrial applications.

The XQ3070 series comprises the following front loading versions:

XQ3070	for use in monochrome cameras
XQ3070L	for use in the luminance channel of colour cameras
XQ3070R	for use in the red channel
XQ3070G	for use in the green channel
XQ3070B	for use in the blue channel
XQ3071	as XQ3070 series; only difference being the degree of freedom from blemishes on the target (industrial quality tubes)
XQ3073R	for use in the red channel; extended red response
XQ3074	as XQ3073. Industrial grade
XQ3075R	for use in the red channel; extended red response and IR filter
XQ3076	as XQ3075. Industrial grade

These tubes are available in rear loading versions (/02,/05,/12 and /15) only.

Special features are:

- New photoconductive target for increased resolution
- "Diode" electron gun with high beam reserve for dynamic beam control (DBC) to minimize comet-tailing and blooming (notes 1, 2, 3)
- Provision for light bias to reduce lag
- Low output capacitance (LOC) for high signal-to-noise ratio

QUICK REFERENCE DATA

"Diode" electron gun		
Diameter		25,4 mm (1 inch)
Length	approx.	170 mm
Provided with anti-halation glass disc		
Focusing	magnetic	
Deflection	magnetic	
Useful target area (scanning area)		9,6 x 12,8 mm
Spectral response		
max. at	approx.	450 nm
cut-off: XQ3070	approx.	650 nm
XQ3073	approx.	850 to 950 nm
XQ3075	approx.	750 nm
Sensitivity		
XQ3070, XQ3070L	typ.	375 μA/lm
XQ3070R	typ.	70 μA/lmF
XQ3070G	typ.	155 μA/lmF
XQ3070B	typ.	40 μA/lmF
XQ3073R, XQ3075R	typ.	100 μA/lmF
Resolution at 400 TV lines (5 MHz)		
XQ3070, XQ3070L	typ.	60 %
XQ3070R	typ.	45 %
XQ3070G	typ.	60 %
XQ3070B	typ.	60 %
XQ3073R, XQ3075R	typ.	55 %
Heater		6,3 V, 95 mA

® Registered trademark for television camera tubes.

MECHANICAL VARIANTS

Variants are defined by a suffix as follows:

XQ . . . ./02, R, G, B, L: rear loading versions with provision for internal light bias, target contact ring with 1 target contact, metal sleeve on pumping stem to mount light bias lamp.

XQ . . . ./05, R, G, B, L: as /02, however without provision for light bias lamp.

XQ . . . ./12, R, G, B, L: as /02, however with 2 contacts on the target ring.

XQ . . . ./15, R, G, B, L: as /05, however with 2 contacts on the target ring.

OPTICAL DATA

		notes
Quality rectangle on photoconductive target (aspect ratio 3 : 4)	9,6 x 12,8 mm	

Orientation of image on target:

For correct orientation of the image on the target the vertical scan should be essentially parallel to the plane passing through the tube axis and the marker line on the protecting sleeve at the base.

Faceplate	
Thickness	1,2 ± 0,1 mm
Refractive index	n = 1,49
Anti-halation glass disc provided with anti reflective coating	
Thickness	5 ± 0,1 mm
Refractive index	n = 1,52

XQ3075R is provided with infrared reflecting filter

ACCESSORIES

		notes
Socket	type 56605	
Deflection and focusing coil unit:		
Black/white	type AT1126/03S	
Colour	type AT1126/03T	
Mask for flare reduction	type 56028	
Light bias lamp in holder	type 56106	4

ELECTRICAL DATA

Deflection		magnetic
Focusing		magnetic
Heating, indirect by a.c. or d.c.; parallel supply		
Heater voltage	V_f	6,3 V ± 5%
Heater current at V_f = 6,3 V	I_f nom.	95 mA

The heater current and the heater voltage must not exceed r.m.s. values of 150 mA and 9,5 V. For optimum performance (lifetime and registration stability) stabilization of the heater voltage is recommended.

Capacitance		
Signal electrode to all		
rear loading types /02 and /05	C_{as}	approx. 2,1 pF
rear loading types /12 and /15	C_{as}	approx. 2,5 pF

This capacitance, which is effectively the output impedance, increases when the tube is inserted in the coil unit.

LIMITING VALUES (Absolute maximum rating system)

Unless otherwise stated, all voltages are referred to the cathode.

					notes
Signal electrode voltage	V_{as}	max.	50	V	
Grid 4 voltage	V_{g4}	max.	1100	V	
Grid 3 voltage	V_{g3}	max.	800	V	
Voltage between grid 4 and grid 3	$V_{g4/g3}$	max.	450	V	
Grid 2 voltage	V_{g2}	max.	340	V	
Grid 1 voltage,					
positive	V_{g1}	max.	25	V	
negative	$-V_{g1}$	max.	200	V	
Grid 1 current					
≈ I_k current, without blanking	I_{g1}	max.	5	mA	
peak to peak with DBC	I_{g1p}	max.	8	mA	2
Cathode to heater voltage					
positive peak	V_{kfp}	max.	125	V	
negative peak	$-V_{kfp}$	max.	50	V	
Cathode heating time before drawing current	t_h	min.	1	min	
External resistance between cathode and heater at $V_{kfp} > 10$ V	R_{kf}	min.	2	kΩ	
Ambient temperature, storage and operation	T_{amb}	max.	50	°C	
		min.	−30	°C	
Faceplate temperature, storage and operation	T	max.	50	°C	
		min.	−30	°C	
Faceplate illuminance	E	max.	500	lx	5

OPERATING CONDITIONS

For a scanned area of 9,6 x 12,8 mm				6
Cathode voltage	V_k	0	V	
Signal electrode voltage	V_{as}	45	V	
Beam current	I_b			7
Grid 4 voltage	V_{g4}	960	V	
Grid 3 voltage	V_{g3}	600	V	
Grid 2 voltage	V_{g2}	300	V	
Grid 1 voltage	V_{g1}		V	7
Blanking voltage on grid 1, peak to peak	$V_{g1p\text{-}p}$	25	V	
Faceplate illuminance	E	0 to 10	lx	8
Faceplate temperature	T	20 to 45	°C	9

ELECTRON GUN CHARACTERISTICS

Cut off					
Grid 1 voltage for cut-off at $V_{g2} = 300$ V, without blanking	V_{g1}		−10 to 0	V	
Grid 1 voltage for normal beam setting	V_{g1w}	⩽	15	V	
Blanking voltage, peak to peak					
on grid 1	$V_{g1p\text{-}p}$		25	V	
on cathode	$V_{kp\text{-}p}$		25	V	
Grid 1 current at normally required beam currents	I_{g1}	⩽	1,5	mA	2
Grid 2 current at normally required beam currents	I_{g2}	⩽	0,1	mA	2

PERFORMANCE

				notes
Dark current	I_d		≤ 2 nA	
Sensitivity at colour temperature of illuminance = 2856 K				10
XQ3070, L		min. 300	typ. 375 µA/lm	
XQ3070R		min. 63	typ. 70 µA/lmF	
XQ3070G		min. 130	typ. 155 µA/lmF	
XQ3070B		min. 35	typ. 40 µA/lmF	
XQ3073R, XQ3075R		min. 80	typ. 100 µA/lmF	
Gamma of transfer characteristic			0,95 ± 0,05	
Spectral response, max. at			450 nm	
Spectral response, cut-off at			650 to 950 nm	
Spectral response curves		see Figs 1, 2, 3		
Resolution				11

Modulation depth, i.e. uncompensated amplitude response at 400 TV lines at the centre of the picture.

		XQ3070 XQ3070L XQ3070G	XQ3070R	XQ3070B	XQ3073R XQ3075R	7, 11
Highlight signal current	I_s	200	100	100	100	nA
Beam current	I_b	400	200	200	200	nA
Modulation depth at 400 TV lines						
typ.		60	45	60	55	%
min.		55	40	55	50	%

Modulation transfer characteristics: see Figs 4 and 5

Lag (typical values, with light bias of 3 nA) 12, 13

Light source with a colour temperature of 2856 K. Appropriate filter inserted in the light path for the chrominance tubes R, G and B

LOW KEY CONDITIONS

	build-up lag		decay lag	
	I_s/I_b = 20/300 nA		I_s/I_b = 20/300 nA	
	60 ms	200 ms	60 ms	200 ms
XQ3070, L	95%	~ 100%	9%	2,5%
XQ3070G	95%	~ 100%	9%	2,5%
XQ3070R	95%	~ 100%	9%	2,5%
XQ3070B	90%	~ 100%	12%	4%
XQ3073R, XQ3075R	90%	~ 100%	11%	3%

		notes
Shading of light bias induced dark current	12,5%	14
Highlight handling capability with DBC		15

MECHANICAL DATA

Rear loading tubes XQ3070/02 and XQ3070/12

Mounting position: any

Mass: ≈ 70 g

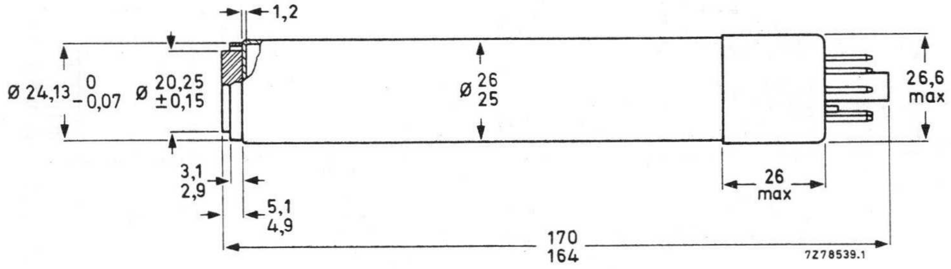

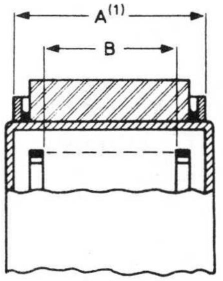

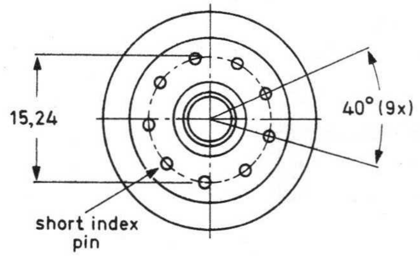

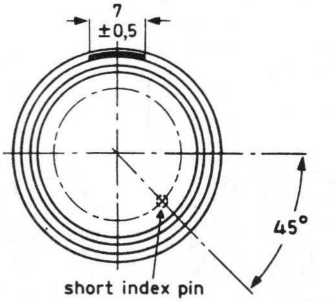

FRONT VIEW XQ . . . . /02

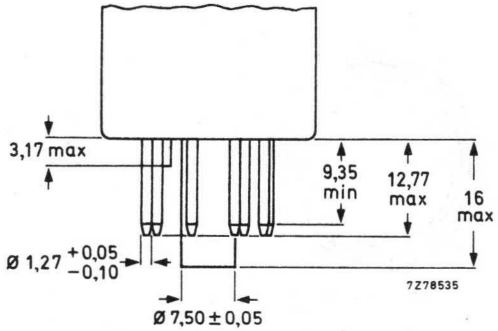

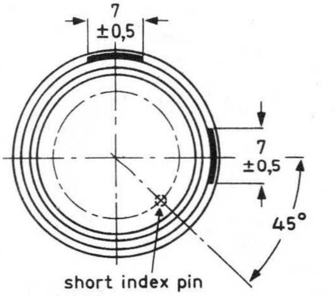

FRONT VIEW XQ . . . . /12

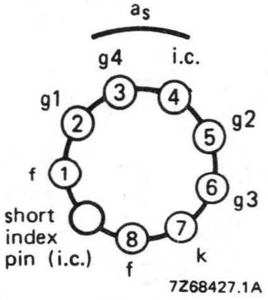

(1) The distance between the geometrical centres of diameter A of the reference ring and diameter B of the mesh electrode ring is < 100 μm.

Rear loading tubes XQ3070/05 and XQ3070/15

Mounting position:	any
Mass:	≈ 70 g
Base:	IEC 67-I-33a (JEDEC E8-11)

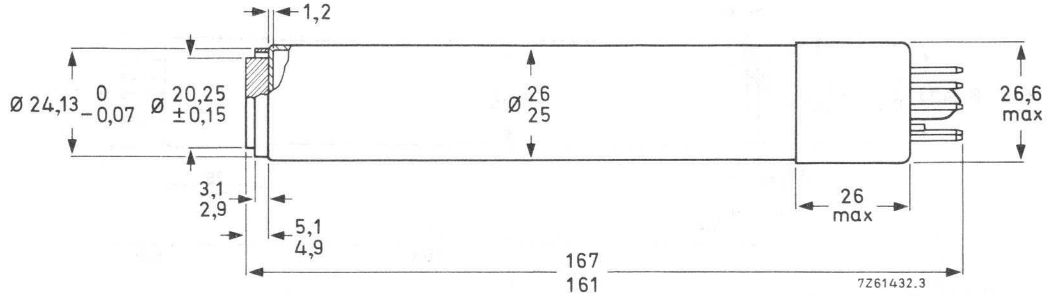

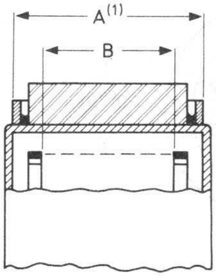

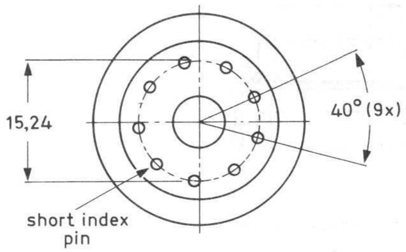

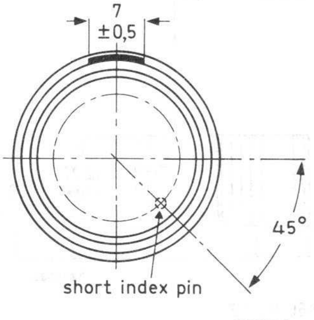

FRONT VIEW

7Z83927

XQ . . . ./05

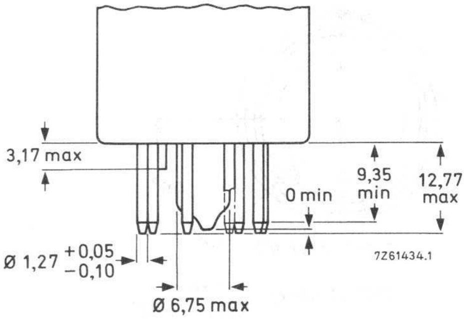

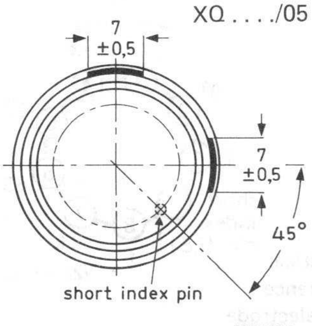

FRONT VIEW

7Z61433.3

XQ . . . ./15

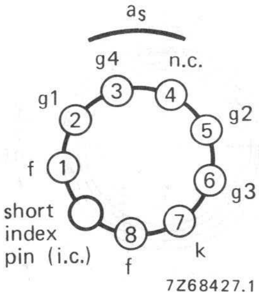

(1) The distance between the geometrical centres of diameter A of the reference ring and diameter B of the mesh electrode ring is $< 100\ \mu m$.

NOTES, see also General Section

1. "Diode" electron gun is a triode gun operating in a diode mode, providing a very high beam reserve.
   N.B.
   Avoid continuous operation at high beam currents since this will shorten tube life. Full advantage of the high beam reserve to reduce comet-tailing and blooming can be made with DBC circuitry which, during highlights, feeds positive-going pulses derived from the video signal to grid 1, to increase the beam current momentarily.
2. The "diode" gun operates with a positive ($\leqslant$ 15 V) grid 1 voltage (adjusted for correct beam settings, see note 7), hence draws some grid 1 current:
   without DBC: $\leqslant$ 1,5 mA (peak) with blanking
   with DBC: $\leqslant$ 8 mA (peak) with blanking, measured with oscilloscope.
   The DBC circuitry should, in the case of highlights, supply positive-going pulses of 7 V above V_{g1w} (see note 7) and up to 8 mA peak to grid 1.
   N.B.
   Applying higher pulses than 7 V is not recommended since this will shorten tube life, impair resolution and may introduce oscillations.
3. The XQ3070 tubes closely resemble mechanically the tubes of the XQ1080/XQ1500 series. Since, however, the "Diode" electron gun draws some grid 1 current (see note 2), cameras designed around XQ1080/XQ1500 tubes will require some modification.
4. For adjustable light bias in versions /02 and /12. The light bias lamp assembly as supplied with these tubes, type 56106, fits in the metal tube cemented to the pumping stem of the tube. The tube and the light bias lamp assembly will fit properly in the socket, type 56605 The wires should be connected to a source, capable of supplying max. 110 mA at 5 V.
   The desired amount of light bias can be obtained by adjusting the current through the filament of the lamp. For black/white operation a light bias corresponding to 2 to 3 nA extra dark current is usually adequate for excellent speed of response. In a colour camera the speeds of response of the tubes can be balanced by adjusting the amount of light bias per tube. A typical setting in a 3-tube colour camera could be 3 nA (R), 2 nA (G), and 6 nA (B). Infrared light with a wavelength > 600 nm in the light bias should be avoided.
5. For short intervals. During storage the tube face shall be covered with the plastic hood provided; when the camera is idle the lens shall be capped, in stand-by also the beam will be cut-off.
6. The operating conditions and performance data quoted relate to operation of the tube in coil unit AT1126. See relevant data of deflection/focusing assemblies.
7. The beam current I_b, as obtained by adjusting the control grid (grid 1) voltage is set for 1 stop over peak white and is 200 nA for R and B tubes, 400 nA for black/white and G tubes. I_b is not the total current available in the scanning beam, but is defined as the maximum amount of signal current, I_s, that can be obtained with this beam.
   In the performance figures e.g. for lag, the signal current and beam current conditions are given as I_s/I_b = 20/300 nA. This means: with a signal current of 20 nA and a beam setting which just allows a signal current of 300 nA.
8. Typical faceplate illumination level for the XQ3070 and XQ3070L to produce 200 nA signal current will be approx. 4,6 lx. The signal currents stated for the colour tubes R, G and B will be obtained with an incident white light level (2856 K) on the filter of approx. 11 lx. These figures are based on the filters described in note 10. For filter BG12, however, a thickness of 1 mm is chosen.
9. The tube can withstand short excursions up to 70 ^{o}C without damage or irreversible degradation in performance.

10. Measuring conditions: illuminance level 4,54 lx at a colour temperature of 2856 K and the appropriate filter inserted in the light path. Filters used are:

XQ3070R, XQ3075R	Schott	OG570	thickness	3 mm
XQ3070G	Schott	VG9	thickness	1 mm
XQ3070B	Schott	BG12	thickness	3 mm
XQ3073R	Schott	OG570	thickness	3 mm
	and Calflex	B1/K1		

For transmission curves see General Section.

11. As measured with a 50 mm Leitz Summicron lens having a sine response of approximately 85% at 20,6 lp/mm (400 TV lines at 9,6 mm picture height) at f : 5,6 and the appropriate filter inserted in the light path. The amplitude response can be raised by means of suitable correction circuits.
12. Adjusted for sum of dark current, leakage current and light bias current of 3 nA.
13. **Build-up lag**
    After 10 s of darkness. The figures are typical percentages of the ultimate signal current obtained 60 ms and 200 ms, respectively, after the introduction of the illuminance.

    Decay lag
    After the target has been illuminated for at least 5 s. The figures represent typical signals in percentages of the original signal current 60 ms and 200 ms, respectively, after removal of the illuminance.
14. Deviation of the level of any of the four corners, i.e. 10% inwards in L and V direction, from the level in the picture centre. The observed shading is composed of slight parabolic and sawtooth components in both line and frame direction which can be sufficiently compensated by suitable black shading compensation circuitry.
15. a. With DBC applied (see note 2) the tube will properly handle highlights with a diameter of 10% of the picture height and with a brightness corresponding to 16 times peak signal white, I_{sp}.
    b. The maximum peak signal currents in the case of highlights will be 2,5 μA. Video preamplifiers should be designed to accommodate these.

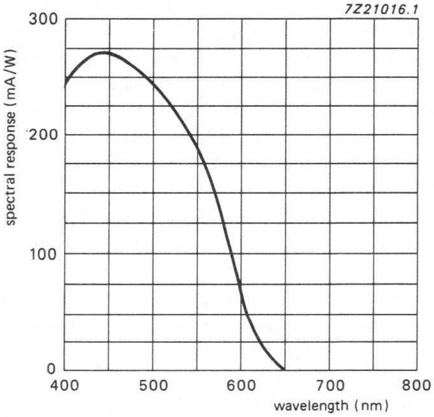

Fig. 1 Typical spectral response
XQ3070,L,R,G,B.

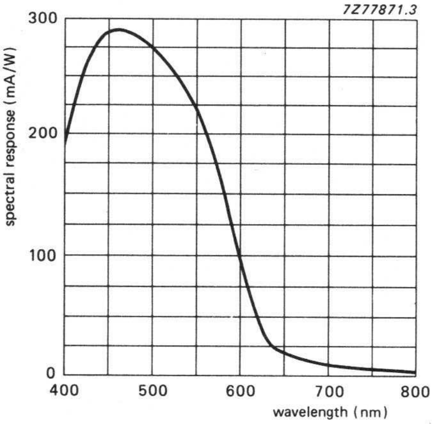

Fig. 2 Typical spectral response for XQ3073R.

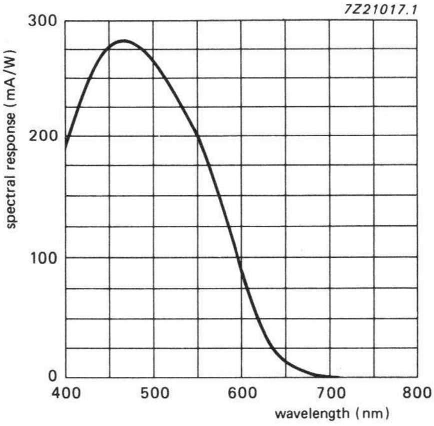

Fig. 3 Typical spectral response for XQ3075R.

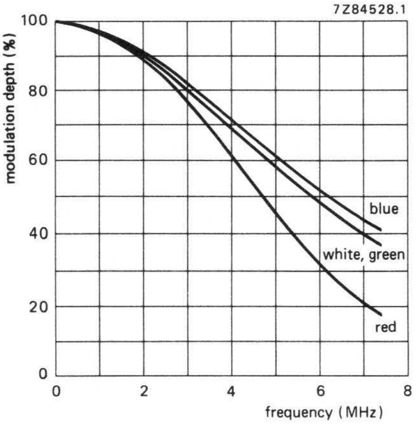

Fig. 4 Typical square-wave response curves for XQ3070

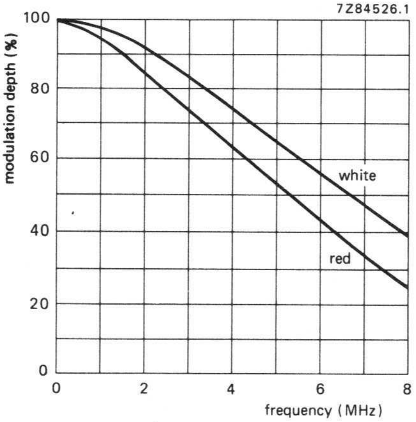

Fig. 5 Typical square-wave response curves forXQ3073/XQ3075.

18 mm dia. PLUMBICON TUBES

CAMERA TUBES

18 mm (2/3 in) diameter Plumbicon® television camera tubes, with standard resolution lead-oxide photoconductive target, for use in high quality monochrome or colour cameras for broadcast, educational or industrial applications.

The XQ1427 series comprises the following versions:

XQ1427	for use in monochrome cameras
XQ1427R	for use in the red channel
XQ1427G	for use in the green channel
XQ1427B	for use in the blue channel
XQ1428	as XQ1427 series; only difference being the degree of freedom from blemishes on the target (industrial quality tubes).

Special feature:

- Mechanically interchangeable with 2/3 inch diameter Vidicon tubes with separate mesh. See note 1.

QUICK REFERENCE DATA

Separate mesh			
Diameter		17,8	mm (2/3 inch)
Length	approx.	108	mm
Provided with anti-halation glass disc			
Focusing	magnetic		
Deflection	magnetic		
Useful target area (scanning area)		6,6 x 8,8	mm
Spectral response			
max. at	approx.	450	nm
cut-off: XQ1427R	approx.	850	nm
XQ1427, XQ1427G	approx.	650 to 850	nm
XQ1427B	approx.	650	nm
Sensitivity			
XQ1427	typ.	365	μA/lm
XQ1427R	typ.	100	μA/lmF
XQ1427G	typ.	140	μA/lmF
XQ1427B	typ.	40	μA/lmF
Resolution at 320 TV lines (4 MHz)			
XQ1427	typ.	60	%
XQ1427R	typ.	52	%
XQ1427G	typ.	60	%
XQ1427B	typ.	65	%
Heater		6,3	V, 95 mA

® Registered trade mark for television camera tubes.

OPTICAL DATA

		notes
Quality rectangle on photoconductive target (aspect ratio 3 : 4)	6,6 x 8,8 mm	

Orientation of image on target:

For correct orientation of the image on the target the horizontal scan should be essentially parallel to the plane passing through the tube axis and the gap between pins 1 and 7.

Faceplate	
Thickness	2,3 ± 0,1 mm
Refractive index	$n = 1{,}49$
Anti-halation glass disc provided with anti reflective coating	
Thickness	3,7 ± 0,1 mm
Refractive index	$n = 1{,}52$

ACCESSORIES

Socket	type 56049	
Deflection and focusing coil unit:	rear loading	front loading
Black/white	type AT1109S	AT1106S
Colour	type AT1109T	AT1106T
Mask for flare reduction	type 56033	

ELECTRICAL DATA

Deflection		magnetic
Focusing		magnetic
Heating, indirect by a.c. or d.c.; parallel supply		
Heater voltage	V_f	6,3 V ± 5%
Heater current at $V_f = 6{,}3$ V	I_f nom.	95 mA

The heater voltage must not exceed an r.m.s. value of 9 V. For optimum performance (lifetime and registration stability) stabilization of the heater voltage is recommended.

Capacitance		
Signal electrode to all	C_{as}	1,5 to 3 pF

This capacitance, which is effectively the output impedance, increases when the tube is inserted in the coil unit.

LIMITING VALUES (Absolute maximum rating system)

Unless otherwise stated, all voltages are referred to the cathode.

					notes
Signal electrode voltage	V_{as}	max.	50	V	1
Grid 4 voltage	V_{g4}	max.	1000	V	
Grid 3 voltage	V_{g3}	max.	750	V	
Voltage between grid 4 and grid 3	$V_{g4/g3}$	max.	400	V	
Grid 2 voltage	V_{g2}	max.	350	V	
Grid 1 voltage,					
positive	V_{g1}	max.	0	V	
negative	$-V_{g1}$	max.	200	V	
Cathode heating time before drawing cathode current	t_h	min.	1	min	
Cathode to heater voltage					
positive peak	V_{kfp}	max.	125	V	
negative peak	$-V_{kfp}$	max.	50	V	
External resistance between cathode and heater at $-V_{kfp} > 10$ V	R_{kf}	min.	2	kΩ	
Ambient temperature, storage and operation	T_{amb}	max. min.	50 −30	°C °C	
Faceplate temperature, storage and operation	T	max. min.	50 −30	°C °C	2
Faceplate illuminance	E	max.	500	lx	3

OPERATING CONDITIONS

For a scanned area of 6,6 x 8,8 mm. 4

Cathode voltage	V_k	0	V	
Signal electrode voltage	V_{as}	45	V	
Beam current	I_b			5

		low voltage mode	high voltage mode		
Grid 4 voltage	V_{g4}	500	750	V	
Grid 3 voltage	V_{g3}	285	430	V	6
Grid 2 voltage	V_{g2}	300	300	V	
Grid 1 voltage	V_{g1}				5

Blanking voltage on grid 2, peak to peak	$V_{g1p\text{-}p}$	50	V	
Faceplate illuminance		0 to 10	lx	7
Faceplate temperature		20 to 45	°C	

ELECTRON GUN CHARACTERISTICS

Cut off

Grid 1 voltage for cut-off at $V_{g2} = 300$ V, without blanking	V_{g1}	−30 to −80	V
Grid 1 voltage for normal beam setting	V_{g1w}	−30 to −10	V
Blanking voltage, peak to peak			
on grid 1	$V_{g1p\text{-}p}$	50 ± 10	V
on cathode	$V_{kp\text{-}p}$	25	V
Grid 2 current at normally required beam currents	I_{g2}	⩽ 0,5	mA

PERFORMANCE

						notes
Dark current	I_d		⩽	1,5	nA	
Sensitivity at colour temperature of illuminance = 2856 K						7
XQ1427	min.	330	typ.	365	μA/lm	
XQ1427R	min.	75	typ.	100	μA/lmF	
XQ1427G	min.	110	typ.	140	μA/lmF	
XQ1427B	min.	35	typ.	40	μA/lmF	
Gamma of transfer characteristics				0,95 ± 0,05		
Spectral response, max. at	approx.			450	nm	9
Spectral response, cut-off at	approx.			650 to 850	nm	
Spectral response curves	see Fig. 1					
Resolution						
Modulation depth, i.e. uncompensated amplitude response at 320 TV lines at the centre of the picture (4 MHz)						10

		XQ1427	XQ1427R	XQ1427G	XQ1427B	
Highlight signal current I_s		150	75	150	75	nA
Beam current I_b		300	150	300	150	nA
Modulation depth at 320 TV lines (4 MHz)						
high voltage mode,	typ.	60	52	60	65	%
	min.	55	47	55	60	%
low voltage mode,	typ.	55	47	55	60	%
	min.	45	40	45	50	%

Modulation transfer characteristics: see Figs 2 and 3

Lag (typical values, no light bias applied) 11,12

Light source with a colour temperature of 2856 K. Appropriate filter inserted in the light path for the chrominance tubes R, G and B.

LOW KEY CONDITIONS

	build-up lag		decay lag	
	I_s/I_b = 20/300 nA		I_s/I_b = 20/300 nA	
	60 ms	200 ms	60 ms	200 ms
XQ1427, XQ1427G	90	≈ 100	9	3 %
XQ1427R	90	≈ 100	9,5	4 %
XQ1427B	90	≈ 100	9,5	4 %

MECHANICAL DATA

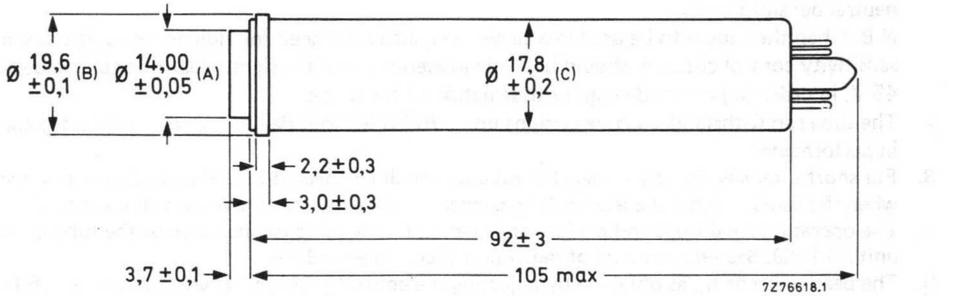

The distance between the geometrical centres of diameters A (anti-halation disc), B (signal-electrode ring), and the geometrical centre of diameter C (tube envelope) is ⩽ 200 μm.

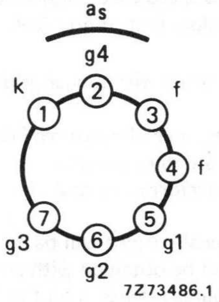

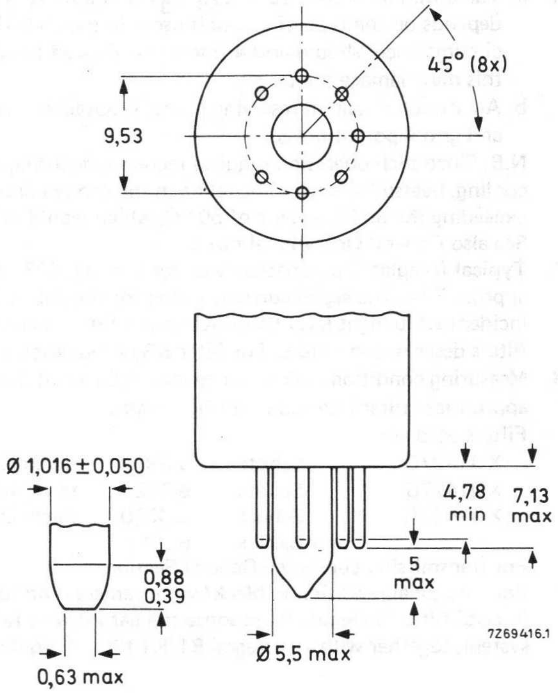

Mounting position: any

Mass: ≈ 23 g

Base: EIA E7-91

NOTES, see also General Section

1. Plumbicon tubes do not permit automatic sensitivity control by means of regulation of the signal electrode voltage. Adequate control is therefore to be achieved by other means (iris control and neutral density filters).
   N.B. When the tube is to be used in a camera originally designed for vidicon tubes, the automatic sensitivity control circuitry should be made inoperative and the signal electrode voltage be set to 45 V, in order to prevent damage or destruction of the target.
2. The tube can withstand short excursions up to 70 °C without damage or irreversible degradation in performance.
3. For short intervals. During storage the tube face shall be covered with the plastic hood provided; when the camera is idle the lens shall be capped, in stand-by also the beam will be cut-off.
4. The operating conditions and performance data quoted relate to operation of the tube in coil unit AT1109. See relevant data of deflection/focusing assemblies.
5. The beam current I_b, as obtained by adjusting the control grid (grid 1) voltage is set to 150 nA for R and B tubes, 300 nA for black and white and G tubes. I_b is not the actual current available in the scanning beam, but is defined as the maximum amount of signal current, I_s, that can be obtained with this beam.
   In the performance figures for lag, the signal current and beam current conditions are given, e.g. as I_s/I_b = 20/300 nA. This means: with a signal current of 20 nA and a beam setting which just allows a signal current of 300 nA.
   The signal currents are measured with an integrating instrument connected in the signal electrode lead and a uniform illumination of the scanned area. The peak signal currents as measured on a waveform oscilloscope will be a factor α larger. $\alpha = 100/\{100 - \beta\}$, β being the total blanking time in %; for the CCIR system $\alpha = 1{,}3$.
6. a. The optimum voltage ratio V_{g4}/V_{g3} to minimize beam landing errors (preferably < 1 V) depends on the type of coil unit used. In the coil AT1109 a ratio of 1,75 is required. Under no circumstances should grid 4 (mesh) be allowed to operate at a voltage below that of grid 3 as this may damage the target.
   b. An attractive gain in resolving power is obtained when the tubes are operated with higher grid 3 and grid 4 potentionals.
   N.B. Since such operation requires increased focusing and deflection power, special measures (air cooling, heatsinks) have to be taken in the camera design to prevent faceplate temperatures exceeding the limiting value of 50 °C, which would otherwise affect tube performance and life. See also General Operational notes.
7. Typical faceplate illumination level for the XQ1427 to produce 150 nA signal current will be approx. 7 lx. The signal currents stated for the colour tubes R, G and B will be obtained with an incident white light level (2856 K) on the filter of approx. 19 lx. These figures are based on the filters described in note 8. For filter BG12, however, a thickness of 1 mm is chosen.
8. Measuring conditions: illuminance level 4,54 lx at a colour temperature of 2856 K and the appropriate filter inserted in the light path.
   Filters used are:

XQ1427G	Schott	VG9	thickness	1 mm
XQ1427B	Schott	BG12	thickness	3 mm
XQ1427R	Schott	OG570	thickness	3 mm
	and Calflex	B1/K1		

   For transmission curves see General Section.
9. For true tonal rendition in black/white cameras and for true colorimetry in colour cameras an integral filter to eleminate response to near infrared radiation should be incorporated in the optical system, together with an integral B1/K1 filter or equivalent.

10. As measured with a 50 mm Leitz Summicron lens having a sine response of approximately 80% at 400 TV lines at f : 5,6 and the appropriate filter inserted in the light path. The horizontal amplitude response can be raised by means of suitable correction circuits, which affect neither the vertical resolution nor the limiting resolution.
11. **Build-up lag**

    After 10 s of darkness. The figures are typical percentages of the ultimate signal current obtained 60 ms and 200 ms, respectively, after the introduction of the illuminance.

    Decay lag

    After the target has been illuminated for at least 5 s. The figures represent typical signals in percentages of the original signal current 60 ms and 200 ms, respectively, after removal of the illuminance.
12. A reduction of lag, especially under low key conditions is obtained when light bias (up to 5 nA peak) is applied via the optical system. Infrared light with a wavelength > 600 nm in the light bias should be avoided.

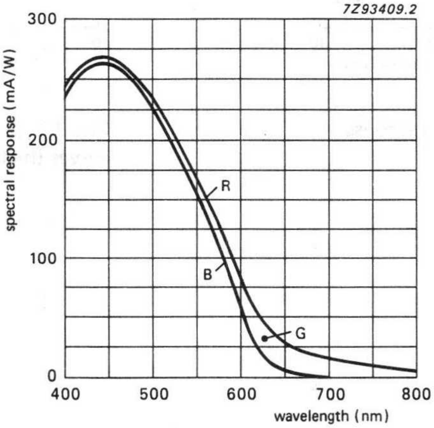

Fig. 1 Typical spectral response.

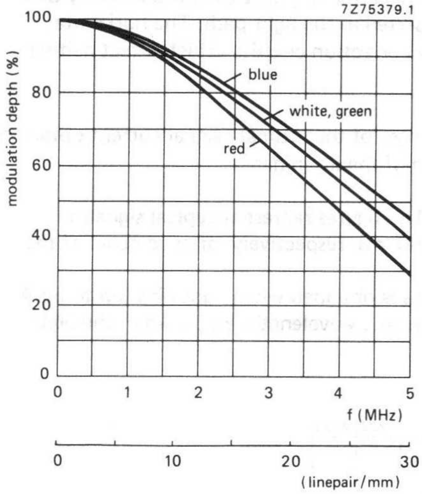

Fig. 2 Typical square wave response curves (low voltage mode).

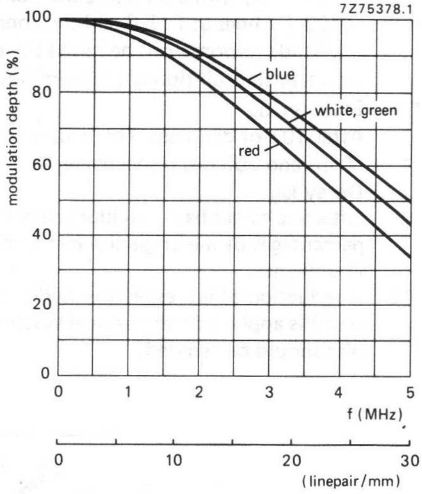

Fig. 3 Typical square wave response curves (high voltage mode).

CAMERA TUBES

18 mm (2/3 in) diameter Plumbicon® television camera tubes, with high resolution lead-oxide photoconductive target, for use in high quality monochrome or colour cameras for broadcast, educational or industrial applications.

The XQ2427 series comprises the following versions:

XQ2427	for use in monochrome cameras
XQ2427R	for use in the red channel
XQ2427G	for use in the green channel
XQ2427B	for use in the blue channel
XQ2428	as XQ2427 series; only difference being the degree of freedom from blemishes on the target (industrial quality tubes).

Special features are:

- New photoconductive target for increased resolution
- "Diode" electron gun with high beam reserve for dynamic beam control (DBC) to minimize comet-tailing and blooming, see notes 1 and 2.

QUICK REFERENCE DATA

"Diode" electron gun			
Diameter		17,8	mm (2/3 inch)
Length	approx.	108	mm
Provided with anti-halation glass disc			
Focusing	magnetic		
Deflection	magnetic		
Useful target area (scanning area)		6,6 x 8,8	mm
Spectral response			
max. at	approx.	450	nm
cut-off: XQ2427R	approx.	850	nm
XQ2427, XQ2427G	approx.	650 to 850	nm
XQ2427B	approx.	650	nm
Sensitivity			
XQ2427	typ.	340	μA/lm
XQ2427R	typ.	95	μA/lmF
XQ2427G	typ.	130	μA/lmF
XQ2427B	typ.	40	μA/lmF
Resolution at 400 TV lines (5 MHz)			
XQ2427	typ.	50	%
XQ2427R	typ.	45	%
XQ2427G	typ.	50	%
XQ2427B	typ.	55	%
Heater		6,3	V, 95 mA

® Registered trade mark for television camera tubes.

OPTICAL DATA

notes

Quality rectangle on photoconductive target (aspect ratio 3 : 4)	6,6 x 8,8 mm

Orientation of image on target:

For correct orientation of the image on the target the horizontal scan should be essentially parallel to the plane passing through the tube axis and the gap between pins 1 and 7.

Faceplate	
Thickness	2,3 ± 0,1 mm
Refractive index	n = 1,49
Anti-halation glass disc provided with anti-reflective coating	
Thickness	2,5 ± 0,1 mm
Refractive index	n = 1,52

ACCESSORIES

Socket	type 56049	
Deflection and focusing coil unit:	rear loading	front loading
Black/white	type AT1109S	AT1106S
Colour	type AT1109T	AT1106T
Mask for flare reduction	type 56033	

ELECTRICAL DATA

Deflection		magnetic
Focusing		magnetic
Heating, indirect by a.c. or d.c.; parallel supply		
Heater voltage	V_f	6,3 V ± 5%
Heater current at V_f = 6,3 V	I_f nom.	95 mA

The heater voltage must not exceed an r.m.s. value of 9 V. For optimum performance (lifetime and registration stability) stabilization of the heater voltage is recommended.

Capacitance		
Signal electrode to all	C_{as}	1,5 to 3 pF

This capacitance, which is effectively the output impedance, increases when the tube is inserted in the coil unit.

LIMITING VALUES (Absolute maximum rating system)

Unless otherwise stated, all voltages are referred to the cathode.

					notes
Signal electrode voltage	V_{as}	max.	50	V	3
Grid 4 voltage	V_{g4}	max.	1000	V	
Grid 3 voltage	V_{g3}	max.	750	V	
Voltage between grid 4 and grid 3	$V_{g4/g3}$	max.	400	V	
Grid 2 voltage	V_{g2}	max.	350	V	
Grid 1 voltage,					
positive	V_{g1}	max.	25	V	
negative	$-V_{g1}$	max.	200	V	
Grid 1 current ($\approx I_k$)	I_{g1}	max.	5	mA	4
Grid 1 current (peak with DBC)	I_{g1p}	max.	8	mA	
Cathode heating time before drawing cathode current	t_h	min.	1	min	
Cathode to heater voltage					
positive peak	V_{kfp}	max.	125	V	
negative peak	$-V_{kfp}$	max.	50	V	
External resistance between cathode and heater at $V_{kfp} > 10$ V	R_{kf}	min.	2	kΩ	
Ambient temperature, storage and operation	T_{amb}	max.	50	°C	
		min.	−30	°C	
Faceplate temperature, storage and operation	T	max.	50	°C	5
		min.	−30	°C	
Faceplate illuminance	E	max.	500	lx	6

OPERATING CONDITIONS 7

For a scanned area of 6,6 x 8,8 mm.

Cathode voltage	V_k	0	V	
Signal electrode voltage	V_{as}	45	V	
Beam current	I_b			8

		low voltage mode	high voltage mode		
Grid 4 voltage	V_{g4}	500	750	V	9
Grid 4 voltage	V_{g3}	285	430	V	9
Grid 2 voltage	V_{g2}	300	300	V	
Grid 1 voltage	V_{g1}				8

Blanking voltage on grid 2, peak to peak	$V_{g1p\text{-}p}$	25	V	
Faceplate illuminance		0 to 10	lx	10
Faceplate temperature		20 to 45	°C	

ELECTRON GUN CHARACTERISTICS

Cut off

Grid 1 voltage for cut-off at $V_{g2} = 300$ V, without blanking	V_{g1}		−10 to 0	V	
Grid 1 voltage for normal beam setting	V_{g1w}	$\leqslant$	15	V	8
Blanking voltage, peak to peak					
on grid 1	$V_{g1p\text{-}p}$		25	V	
on cathode	$V_{kp\text{-}p}$		25	V	
Grid 1 current at normally required beam currents	I_{g1}	$\leqslant$	1,5	mA	
Grid 2 current at normally required beam currents	I_{g2}	$\leqslant$	0,1	mA	

PERFORMANCE

						notes
Dark current	I_d		≤	1,0	nA	
Sensitivity at colour temperature of illuminance = 2856 K						11
XQ2427	min.	275	typ.	340	μA/lm	
XQ2427R	min.	80	typ.	95	μA/lmF	
XQ2427G	min.	95	typ.	130	μA/lmF	
XQ2427B	min.	35	typ.	40	μA/lmF	
Gamma of transfer characteristics				0,95 ± 0,05		
Spectral response, max. at	approx.			450	nm	12
Spectral response, cut-off at	approx.			650 to 850	nm	
Spectral response curves	see Fig. 1					
Resolution						13

Modulation depth, i.e. uncompensated amplitude response at 400 TV lines at the centre of the picture (5 MHz)

		XQ2427	XQ2427R	XQ2427G	XQ2427B	
Highlight signal current I_s		200	150	200	150	nA
Beam current I_b		400	300	400	300	nA
Modulation depth at 400 TV lines (5 MHz)						
high voltage mode,	typ.	50	45	50	55	%
	min.	45	40	45	50	%
low voltage mode,	typ.	48	40	48	55	%
	min.	43	35	43	50	%

Modulation transfer characteristics: see Fig. 2

Lag (typical values, without light bias) 14,15

Light source with a colour temperature of 2856 K. Appropriate filter inserted in the light path for the chrominance tubes R, G and B.

LOW KEY CONDITIONS

	build-up lag		decay lag	
	I_s/I_b = 20/300 nA		I_s/I_b = 20/300 nA	
	60 ms	200 ms	60 ms	200 ms
XQ2427, XQ2427G	95	≈ 100	7,5	3 %
XQ2427R	95	≈ 100	9	3,5 %
XQ2427B	95	≈ 100	10	4 %

Highlight handling capability with DBC 16

MECHANICAL DATA

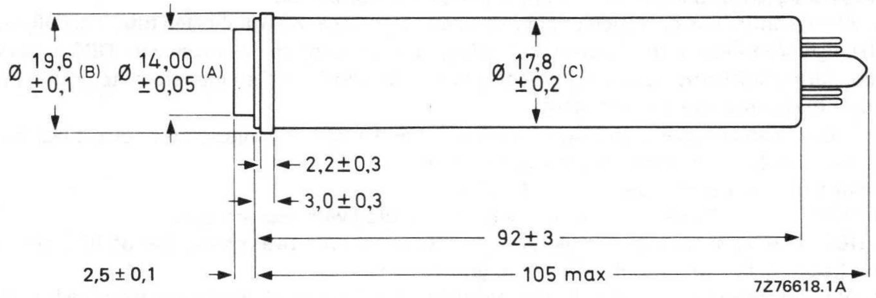

The distance between the geometrical centres of diameters A (anti-halation disc), B (signal-electrode ring), and the geometrical centre of diameter C (tube envelope) is ⩽ 200 μm.

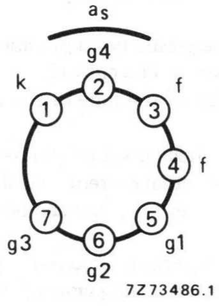

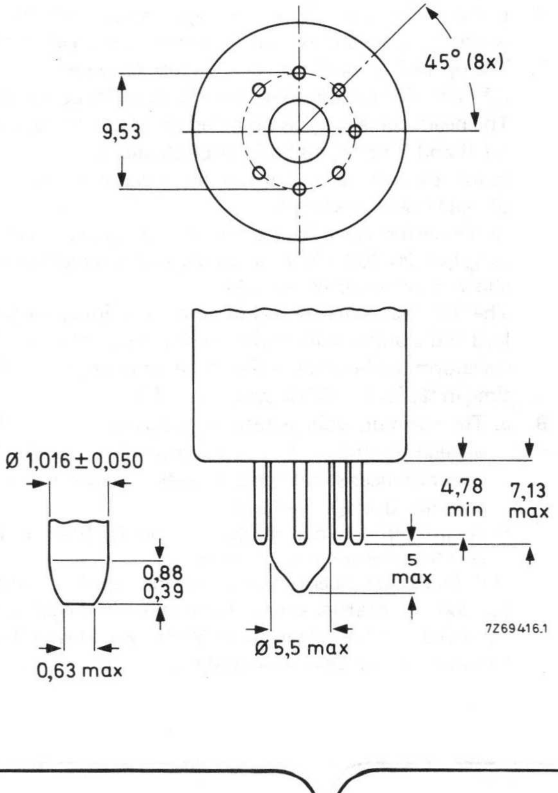

Mounting position: any

Mass: ≈ 23 g

Base: EIA E7-91

NOTES, see also General Section

1. "Diode" electron gun is a triode gun operating in a diode mode, providing a very high beam reserve. Since the "Diode" gun operates with a positive grid 1 voltage, causing some grid current, cameras designed around XQ1427 tubes will require modification.
   N.B. Avoid continuous operation at high beam currents since this will shorten tube life. Full advantage of the high beam reserve to reduce comet-tailing and blooming can be made with DBC circuitry which, during highlights, feeds positive-going pulses derived from the video signal to grid 1, to increase the beam current momentarily.
2. The "diode" gun operates with a positive ($\leqslant$ 15 V) grid 1 voltage (adjusted for correct beam settings, see note 8), hence draws some grid 1 current:
   without DBC: $\leqslant$ 1,5 mA (peak) with blanking
   with DBC: $\leqslant$ 8 mA (peak) with blanking, measured with oscilloscope.
   The DBC circuitry should, in the case of highlights, supply positive-going pulses of 10 V above V_{g1w} (see note 8) and up to 8 mA peak to grid 1.
   N.B. Applying higher pulses than 10 V is not recommended since this will shorten tube life, impair resolution and may introduce oscillations.
3. Plumbicon tubes do not permit automatic sensitivity control by means of regulation of the signal electrode voltage. Adequate control is therefore to be achieved by other means (iris control and neutral density filters).
   N.B. When the tube is to be used in a camera originally designed for vidicon tubes, the automatic sensitivity control circuitry should be made inoperative and the signal electrode voltage be set to 45 V, in order to prevent damage or destruction of the target.
4. Peak value, measured with an oscilloscope.
5. The tube can withstand short excursions up to 70 °C without damage or irreversible degradation in performance.
6. For short intervals. During storage the tube face shall be covered with the plastic hood provided; when the camera is idle the lens shall be capped, in stand-by also the beam will be cut-off.
7. The operating conditions and performance data quoted relate to operation of the tube in coil unit AT1109. See relevant data of deflection/focusing assemblies.
8. The beam current I_b, as obtained by adjusting the control grid (grid 1) voltage is set to 300 nA for R and B tubes, 400 nA for black and white and G tubes. I_b is not the actual current available in the scanning beam, but is defined as the maximum amount of signal current, I_s, that can be obtained with this beam.
   In the performance figures for lag, the signal current and beam current conditions are given, e.g. as I_s/I_b = 20/300 nA. This means: with a signal current of 20 nA and a beam setting which just allows a signal current of 300 nA.
   The signal currents are measured with an integrating instrument connected in the signal electrode lead and a uniform illumination of the scanned area. The peak signal currents as measured on a waveform oscilloscope will be a factor α larger. $\alpha = 100/\{100 - \beta\}$, β being the total blanking time in %; for the CCIR system $\alpha = 1{,}3$.
9. a. The optimum voltage ratio V_{g4}/V_{g3} to minimize beam landing errors (preferably < 1 V) depends on the type of coil unit used. In the coil AT1109 a ratio of 1,75 is required. Under no circumstances should grid 4 (mesh) be allowed to operate at a voltage below that of grid 3 as this may damage the target.
   b. An attractive gain in resolving power is obtained when the tubes are operated with higher grid 3 and grid 4 potentionals.
   N.B. Since such operation requires increased focusing and deflection power, special measures (air cooling, heatsinks) have to be taken in the camera design to prevent faceplate temperatures exceeding the limiting value of 50 °C, which would otherwise affect tube performance and life. See also General Operational notes.

10. Typical faceplate illumination level for the XQ2427 to produce 200 nA signal current will be approx. 10 lx. The signal currents stated for the colour tubes R, G and B will be obtained with an incident white light level (2856 K) on the filter of approx. 25 lx. These figures are based on the filters described in note 11. For filter BG12, however, a thickness of 1 mm is chosen.
11. Measuring conditions: illuminance level 4,54 lx at a colour temperature of 2856 K and the appropriate filter inserted in the light path.
Filters used are:

XQ2427G	Schott	VG9	thickness	1 mm
XQ2427B	Schott	BG12	thickness	3 mm
XQ2427R	Schott	OG570	thickness	3 mm
	and Calflex	B1/K1		

For transmission curves see General Section.
12. For true tonal rendition in black/white cameras and for true colorimetry in colour cameras an integral filter to eleminate response to near infrared radiation should be incorporated in the optical system, together with a heat reflecting filter B1/K1 or equivalent.
13. As measured with a 50 mm Leitz Summicron lens having a sine response of approximately 80% at 30 lp/mm (400 TV lines at 6,6 mm x 8,8 mm) at f : 5,6 and the appropriate filter inserted in the light path. The horizontal amplitude response can be raised by means of suitable correction circuits, which affect neither the vertical resolution nor the limiting resolution.
14. **Build-up lag**
After 10 s of darkness. The figures are typical percentages of the ultimate signal current obtained 60 ms and 200 ms, respectively, after the introduction of the illuminance.
Decay lag
After the target has been illuminated for at least 5 s. The figures represent typical signals in percentages of the original signal current 60 ms and 200 ms, respectively, after removal of the illuminance.
15. A reduction of lag, especially under low key conditions is obtained when light bias (up to 5 nA peak) is applied via the optical system. Infrared light with a wavelength > 600 nm in the light bias should be avoided.
16. a. With DBC applied (see note 2) the tube will properly handle highlights with a diameter of 10% of the picture height and with a brightness corresponding to 16 times peak signal white, I_{sp}.
    b. The maximum peak signal currents in the case of highlights will be 2,5 μA. Video preamplifiers should be designed to accomodate these.

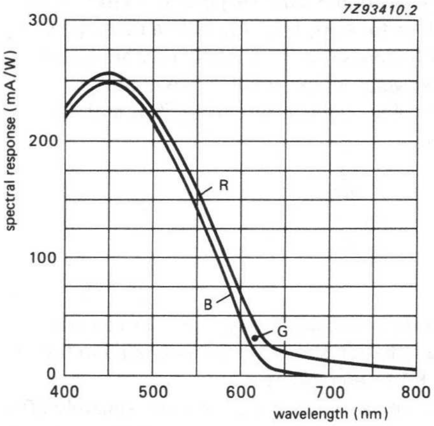

Fig. 1 Typical spectral response curves.

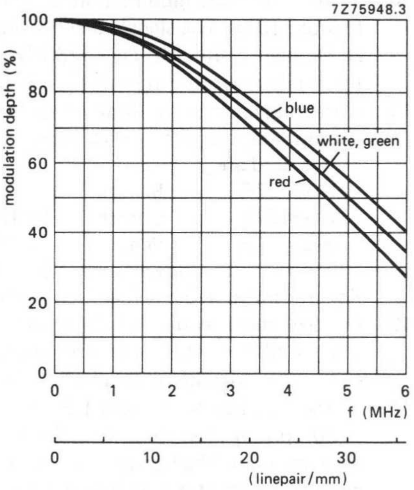

Fig. 2 Typical square wave response curves (high voltage mode).

CAMERA TUBES

18 mm (2/3 in) diameter Plumbicon® television camera tubes, with high resolution lead-oxide photoconductive target, for use in high quality monochrome or colour cameras for broadcast, educational or industrial applications.

The XQ3427 series comprises the following versions:

XQ3427	for use in monochrome cameras
XQ3427R	for use in the red channel
XQ3427G	for use in the green channel
XQ3427B	for use in the blue channel

Special features are:

- New photoconductive target for increased resolution
- "Diode" electron gun with high beam reserve for dynamic beam control (DBC) to minimize comet-tailing and blooming, see notes 1 and 2
- Low output capacitance (LOC) for high signal to noise ratio.

QUICK REFERENCE DATA

"Diode" electron gun		
Diameter		17,8 mm (2/3 inch)
Length	approx.	108 mm
Provided with anti-halation glass disc		
Focusing	magnetic	
Deflection	magnetic	
Useful target area (scanning area)		6,6 x 8,8 mm
Spectral response		
max. at	approx.	450 nm
cut-off: XQ3427R	approx.	850 nm
XQ3427, XQ3427G	approx.	650 to 850 nm
XQ3427B	approx.	650 nm
Sensitivity		
XQ3427	typ.	340 μA/lm
XQ3427R	typ.	95 μA/lmF
XQ3427G	typ.	130 μA/lmF
XQ3427B	typ.	40 μA/lmF
Resolution at 400 TV lines (5 MHz)		
XQ3427	typ.	50 %
XQ3427R	typ.	45 %
XQ3427G	typ.	50 %
XQ3427B	typ.	55 %
Heater		6,3 V, 95 mA

® Registered trade mark for television camera tubes.

OPTICAL DATA

			notes
Quality rectangle on photoconductive target (aspect ratio 3 : 4)		6,6 x 8,8 mm	

Orientation of image on target:

For correct orientation of the image on the target the horizontal scan should be essentially parallel to the plane passing through the tube axis and the gap between pins 1 and 7.

Faceplate	
Thickness	2,3 ± 0,1 mm
Refractive index	n = 1,49
Anti-halation glass disc provided with anti-reflective coating	
Thickness	2,5 ± 0,1 mm
Refractive index	n = 1,52

ACCESSORIES

Socket	type 56049
Deflection and focusing coil unit:	
Black/white	type 1109/10S
Colour	type 1109/10T
Mask for flare reduction	type 56030

ELECTRICAL DATA

Deflection		magnetic	
Focusing		magnetic	
Heating, indirect by a.c. or d.c.; parallel supply			
Heater voltage	V_f	6,3 V ± 5%	
Heater current at $V_f = 6,3$ V	I_f nom.	95 mA	
The heater voltage must not exceed an r.m.s. value of 9 V. For optimum performance (lifetime and registration stability) stabilization of the heater voltage is recommended.			
Capacitance			
Signal electrode to all	C_{as}	typ. 1,5 pF	3
This capacitance, which is effectively the output impedance, increases when the tube is inserted in the coil unit.			

LIMITING VALUES (Absolute maximum rating system)

Unless otherwise stated, all voltages are referred to the cathode.

				notes
Signal electrode voltage	V_{as}	max.	50 V	4
Grid 4 voltage	V_{g4}	max.	1000 V	
Grid 3 voltage	V_{g3}	max.	750 V	
Voltage between grid 4 and grid 3	$V_{g4/g3}$	max.	400 V	
Grid 2 voltage	V_{g2}	max.	350 V	
Grid 1 voltage,				
positive	V_{g1}	max.	25 V	
negative	$-V_{g1}$	max.	200 V	
Grid 1 current (≈ I_k)	I_{g1}	max.	5 mA	5
Grid 1 current (peak with DBC)	I_{g1p}	max.	8 mA	2
Cathode heating time before drawing cathode current	t_h	min.	1 min	
Cathode to heater voltage				
positive peak	V_{kfp}	max.	125 V	
negative peak	$-V_{kfp}$	max.	50 V	
External resistance between cathode and heater at $V_{kfp} > 10$ V	R_{kf}	min.	2 kΩ	
Ambient temperature, storage and operation	T_{amb}	max.	50 °C	
		min.	−30 °C	
Faceplate temperature, storage and operation	T	max.	50 °C	6
		min.	−30 °C	
Faceplate illuminance	E	max.	500 lx	7

OPERATING CONDITIONS 8

For a scanned area of 6,6 x 8,8 mm.

Cathode voltage	V_k	0 V	
Signal electrode voltage	V_{as}	45 V	
Beam current	I_b		9

		low voltage mode	high voltage mode	
Grid 4 voltage	V_{g4}	500	750 V	10
Grid 3 voltage	V_{g3}	285	430 V	10
Grid 2 voltage	V_{g2}	300	300 V	
Grid 1 voltage	V_{g1}			9

Blanking voltage on grid 2, peak to peak	$V_{g1p\text{-}p}$	25 V	
Faceplate illuminance		0 to 10 lx	10
Faceplate temperature		20 to 45 °C	

ELECTRON GUN CHARACTERISTICS

Cut off				
Grid 1 voltage for cut-off at $V_{g2} = 300$ V, without blanking	V_{g1}		−10 to 0 V	
Grid 1 voltage for normal beam setting	V_{g1w}	⩽	15 V	9
Blanking voltage, peak to peak				
on grid 1	$V_{g1p\text{-}p}$		25 V	
on cathode	$V_{kp\text{-}p}$		25 V	
Grid 1 current at normally required beam currents	I_{g1}	⩽	1,5 mA	
Grid 2 current at normally required beam currents	I_{g2}	⩽	0,1 mA	

PERFORMANCE

						notes
Dark current	I_d		≤	1,0	nA	
Sensitivity at colour temperature of illuminance = 2856 K						12
XQ3427	min.	275	typ.	340	μA/lm	
XQ3427R	min.	80	typ.	95	μA/lmF	
XQ3427G	min.	95	typ.	130	μA/lmF	
XQ3427B	min.	35	typ.	40	μA/lmF	
Gamma of transfer characteristics			0,95 ± 0,05			
Spectral response, max. at	approx.			450	nm	13
Spectral response, cut-off at	approx.		650 to 850		nm	
Spectral response curves	see Fig. 1					
Resolution						14

Modulation depth, i.e. uncompensated amplitude response at 400 TV lines at the centre of the picture (5 MHz)

	XQ3427	XQ3427R	XQ3427G	XQ3427B	
Highlight signal current I_s	200	150	200	150	nA
Beam current I_b	400	300	400	300	nA
Modulation depth at 400 TV lines (5 MHz)					
high voltage mode, typ.	50	45	50	60	%
min.	45	40	45	55	%
low voltage mode, typ.	48	40	48	55	%
min.	43	35	43	50	%

Modulation transfer characteristics: see Fig. 2

Lag (typical values, without light bias) 15,16

Light source with a colour temperature of 2856 K. Appropriate filter inserted in the light path for the chrominance tubes R, G and B

LOW KEY CONDITIONS

	build-up lag		decay lag	
	I_s/I_b = 20/300 nA		I_s/I_b = 20/300 nA	
	60 ms	200 ms	60 ms	200 ms
XQ3427, XQ3427G	95	≈ 100	7,5	2,5 %
XQ3427R	95	≈ 100	9	3,5 %
XQ3427B	95	≈ 100	10	3,5 %

Highlight handling capability with DBC 17

MECHANICAL DATA

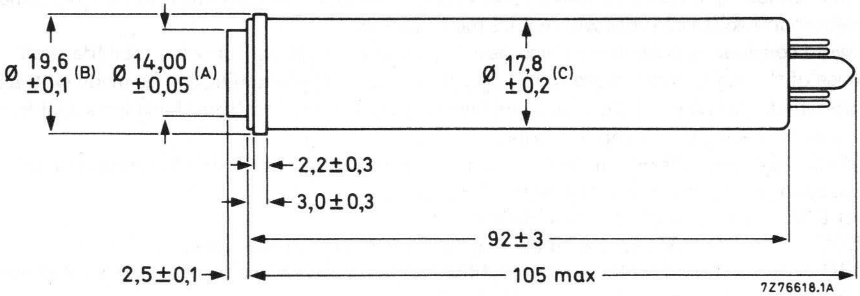

The distance between the geometrical centres of diameters A (anti-halation disc), B (metal ring), and the geometrical centre of diameter C (tube envelope) is ⩽ 200 μm.

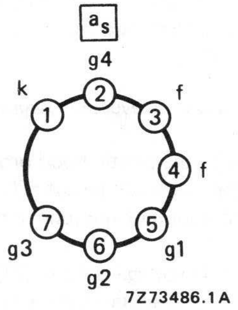

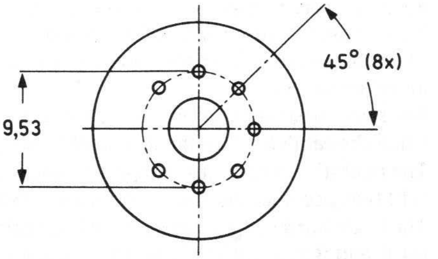

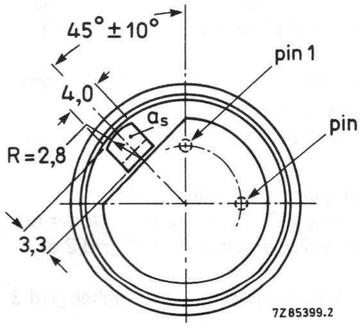

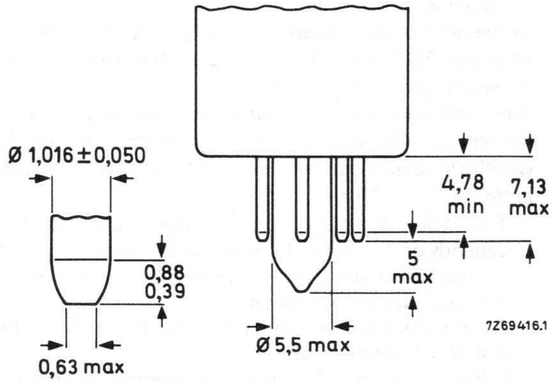

Mounting position: any

Mass: ≈ 23 g

Base: EIA E7-91

NOTES, see also General Section

1. "Diode" electron gun is a triode gun operating in a diode mode, providing a very high beam reserve. Since the "Diode" gun operates with a positive grid 1 voltage, causing some grid current, cameras designed around XQ1427 tubes will require modification.
   N.B. Avoid continuous operation at high beam currents since this will shorten tube life. Full advantage of the high beam reserve to reduce comet-tailing and blooming can be made with DBC circuitry which, during highlights, feeds positive-going pulses derived from the video signal to grid 1, to increase the beam current momentarily.
2. The "diode" gun operates with a positive ($\leqslant$ 15 V) grid 1 voltage (adjusted for correct beam settings, see note 9), hence draws some grid 1 current:
   without DBC: $\leqslant$ 1,5 mA (peak) with blanking
   with DBC: $\leqslant$ 8 mA (peak) with blanking measured with oscilloscope.
   The DBC circuitry should, in the case of highlights, supply positive-going pulses of 10 V above V_{g1w} (see note 9) and up to 8 mA peak to grid 1.
   N.B. Applying higher pulses than 10 V is not recommended since this will shorten tube life, impair resolution and may introduce oscillations.
3. Metal ring not electrically connected.
4. Plumbicon tubes do not permit automatic sensitivity control by means of regulation of the signal electrode voltage. Adequate control is therefore to be acieved by other means (iris control and neutral density filters).
   N.B. When the tube is to be used in a camera originally designed for vidicon tubes, the automatic sensitivity control circuitry should be made inoperative and the signal electrode voltage be set to 45 V, in order to prevent damage or destruction of the target.
5. Peak value, measured with an oscilloscope.
6. The tube can withstand short excursions up to 70 °C without damage or irreversible degradation in performance.
7. For short intervals. During storage the tube face shall be covered with the plastic hood provided; when the camera is idle the lens shall be capped, in stand-by also the beam will be cut-off.
8. The operating conditions and performance data quoted relate to operation of the tube in coil unit AT1109. See relevant data of deflection/focusing assemblies.
9. The beam current I_b, as obtained by adjusting the control grid (grid 1) voltage is set to 300 nA for R and B tubes, 400 nA for black and white and G tubes. I_b is not the actual current available in the scanning beam, but is defined as the maximum amount of signal current, I_s, that can be obtained with this beam.
   In the performance figures for lag, the signal current and beam current conditions are given, e.g. as I_s/I_b = 20/300 nA. This means: with a signal current of 20 nA and a beam setting which just allows a signal current of 300 nA.
   The signal currents are measured with an integrating instrument connected in the signal electrode lead and a uniform illumination of the scanned area. The peak signal currents as measured on a waveform oscilloscope will be a factor α larger. $\alpha = 100/\{100-\beta\}$, β being the total blanking time in %; for the CCIR system $\alpha = 1{,}3$.
10. a. The optimum voltage ratio V_{g4}/V_{g3} to minimize beam landing errors (preferably $<$ 1 V) depends on the type of coil unit used. In the coil AT1109 a ratio of 1,75 is required. Under no circumstances should grid 4 (mesh) be allowed to operate at a voltage below that of grid 3 as this may damage the target.
    b. An attractive gain in resolving power is obtained when the tubes are operated with higher grid 3 and grid 4 potentionals.
    N.B. Since such operation requires increased focusing and deflection power, special measures (air cooling, heatsinks) have to be taken in the camera design to prevent faceplate temperatures exceeding the limiting value of 50 °C, which would otherwise affect tube performance and life. See also General Operational notes.

11. Typical faceplate illumination level for the XQ3427 to produce 200 nA signal current will be approx. 10 lx. The signal currents stated for the colour tubes R, G and B will be obtained with an incident white light level (2856 K) on the filter of approx. 25 lx. These figures are based on the filters described in note 12. For filter BG12, however, a thickness of 1 mm is chosen.
12. Measuring conditions: illuminance level 4,54 lx at a colour temperature of 2856 K and the appropriate filter inserted in the light path.

    Filters used are:

XQ3427G	Schott	VG9	thickness	1 mm
XQ3427B	Schott	BG12	thickness	3 mm
XQ3427R	Schott	OG570	thickness	3 mm
	and Calflex	B1/K1		

    For transmission curves see General Section.
13. For true tonal rendition in black/white cameras and for true colorimetry in colour cameras an integral filter to eleminate response to near infrared radiation should be incorporated in the optical system, together with a heat reflecting filter B1/K1 or equivalent.
14. As measured with a 50 mm Leitz Summicron lens having a sine response of approximately 80% at 30 lp/mm (400 TV lines at 6,6 mm x 8,8 mm) at f : 5,6 and the appropriate filter inserted in the light path. The horizontal amplitude response can be raised by means of suitable correction circuits, which affect neither the vertical resolution nor the limiting resolution.
15. **Build-up lag**

    After 10 s of darkness. The figures are typical percentages of the ultimate signal current obtained 60 ms and 200 ms, respectively, after the introduction of the illuminance.

    Decay lag

    After the target has been illuminated for at least 5 s. The figures represent typical signals in percentages of the original signal current 60 ms and 200 ms, respectively, after removal of the illuminance.
16. A reduction of lag, especially under low key conditions is obtained when light bias up to 5 nA (peak) is applied via the optical system. Infrared light with a wavelength $>$ 600 nm in the light bias should be avoided.
17. a. With DBC applied (see note 2) the tube will properly handle highlights with a diameter of 10% of the picture height and with a brightness corresponding to 16 times peak signal white, I_{sp}.

    b. The maximum peak signal currents in the case of highlights will be 2,5 μA. Video preamplifiers should be designed to accomodate these.

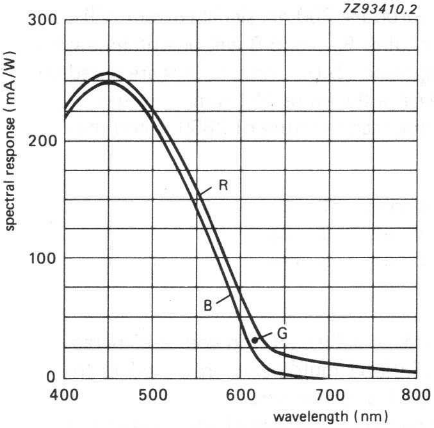

Fig. 1 Typical spectral responses.

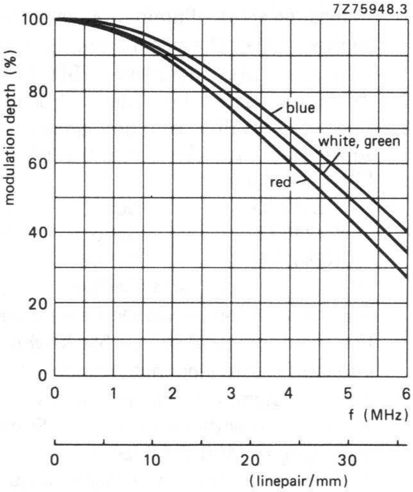

Fig 2 Typical square wave response curves (high voltage mode).

CAMERA TUBES

18 mm (2/3 in) diameter Plumbicon® television camera tubes with high resolution leadoxide photoconductive target, magnetic focusing electrostatic deflection.

The XQ3457 series is intended for use in high quality monochrome and colour cameras in broadcast, educational and industrial applications.

The XQ3457 series comprises the following versions:
XQ3457 for monochrome cameras;
XQ3457R for the red channel of colour cameras;
XQ3457G for the green channel;
XQ3457B for the blue channel.

Special features are:

- MS type (Magnetic-Static) providing short tube length
- New photoconductive target for increased resolution
- "Diode" electron gun for D.B.C. (Dynamic Beam Control) to minimize comet tailing and highlight blooming (notes 1 and 2)
- Low output capacitance for high signal to noise ratio

QUICK REFERENCE DATA

"Diode" electron gun	
Diameter	17,8 mm (2/3")
Length	approx. 87,5 mm
Provided with anti-halation glass disc, thickness	2,5 mm
Focusing	magnetic
Deflection	electrostatic
Useful target area	6,6 mm x 8,8 mm
Spectral response max. at	≈ 480 nm
Spectral response cut-off	
XQ3457R	≈ 850 nm
XQ3457, XQ3457G, XQ3457B	≈ 650 nm
Sensitivity	
XQ3457	typ. 320 μA/lm
XQ3457R	typ. 100 μA/lmF
XQ3457G	typ. 125 μA/lmF
XQ3457B	typ. 36 μA/lmF
Modulation depth at 400 TV lines (5 MHz)	
XQ3457	typ. 50%
Heater	6,3 V; 95 mA

® Registered trademark for television camera tube.

OPTICAL DATA

Dimensions of quality area of target (aspect ratio 3 : 4)	6,6 mm x 8,8 mm

Orientation of image on target

For correct orientation of the image on the target the horizontal scan should be essentially parallel to the long side of the anti-halation glass disc.

Faceplate	
thickness	2,3 ± 0,1 mm
refractive index	1,49
Anti-halation glass disc	
thickness	2,5 ± 0,1 mm
refractive index	1,52

ACCESSORIES

Socket	56601
Focusing coil unit	KV4722 or equivalent

ELECTRICAL DATA

Deflection	electrostatic
Focusing	magnetic

HEATING

Indirect by a.c. or d.c. parallel supply

Heater voltage	V_f	6,3 V ± 5 %
Heater current	I_f	nom. 95 mA

The heater current and heater voltage must never exceed 150 mA and 9,5 V (r.m.s.)

For optimum performance (lifetime and registration stability) stabilization of the heater voltage is recommended.

INTERELECTRODE CAPACITANCE

Signal electrode to all	C_{as}	typ. 3 pF

This capacitance increases slightly when the tube is inserted in the coil unit.

LIMITING VALUES (Absolute maximum rating system)

All voltages are referred to the cathode, unless otherwise stated.

					notes
Signal electrode voltage	V_{as}	max.	50	V	
Grid 4 voltage (mesh electrode)	V_{g2}	max.	500	V	
Grid 3 voltage (deflection electrode, DC component)	V_{g3}	max.	300	V	
Voltage between grid 4 and grid 3	$V_{g3/g4}$	max.	300	V	
Grid 2 voltage	V_{g2}	max.	350	V	
Grid 1 voltage positive	V_{g1}	max.	20	V	
Grid 1 voltage negative	$-V_{g1}$	max.	50	V	
Grid 1 current (≈ cathode current)	I_{g1}	max.	5	mA	3
Grid 1 current (peak current with DBC)	I_{g1p}	max.	8	mA	2
Cathode to heater voltage positive peak	V_{kfp}	max.	125	V	
Cathode to heater voltage negative peak	$-V_{kfp}$	max.	50	V	
Cathode heating time before drawing cathode current	t_h	min.	1	min	
External resistance between cathode and heater at $V_{kf} > 10$ V	R_{kf}	min.	2	kΩ	
Ambient temperature, storage and operation	T_{amb}	max.	50	°C	
		min.	−30	°C	
Faceplate temperature, storage and operation	T	max.	50	°C	4
		min.	−30	°C	
Faceplate illuminance	E	max.	500	lx	5

OPERATING CONDITIONS

			notes
for a scanned area of 6,6 mm x 8,8 mm			6
Cathode voltage	V_k	0 V	
Signal electrode voltage	V_{as}	45 V	
Beam current	I_b		7
Grid 4 voltage	V_{g4}	340 V	
Grid 3 voltage (DC component)	V_{g3}	220 V	
Grid 2 voltage	V_{g2}	250 V	
Grid 1 voltage	V_{g1}	0 to 10 V	7
Blanking voltage on grid 1, peak-peak	$V_{g1p\text{-}p}$	25 V	
Beam focus magnetic field		7,3 mT	9
Grid 3 deflection voltage, horizontal	$V_{g3\,x\,p\text{-}p}$	155 V	
Grid 3 deflection voltage, vertical	$V_{g3\,y\,p\text{-}p}$	116 V	
Faceplate illuminance	E	0 to 10 lx	10
Faceplate temperature	T_{as}	20 to 45 °C	

ELECTRON GUN CHARACTERISTICS

Grid 1 voltage for cut-off at V_{g2} = 250 V without blanking	V_{g1}	−10 to 0 V	
Grid 1 voltage for normal beam current	V_{g1w}	$\leqslant$ 10 V	
Blanking voltage with respect to V_{g1w} peak to peak			
on grid 1	$V_{g1p\text{-}p}$	25 V	
on cathode	$V_{k\ p\text{-}p}$	25 V	
Grid 1 current at normally required beam currents	I_{g1}	$\leqslant$ 3 mA	
Grid 2 current at normally required beam currents	I_{g2}	$\leqslant$ 0,1 mA	

PERFORMANCE

Dark current	I_d	$\leqslant$ 2 nA	
Sensitivity at colour temperature of 2856K			11
XQ3457	min. 270	typ. 320 μA/m	
XQ3457R	min. 75	typ. 100 μA/mF	
XQ3457G	min. 90	typ. 125 μA/mF	
XQ3457B	min. 33	typ. 36 μA/mF	
Gamma of transfer characteristic		0,95 ± 0,05	
Spectral response			12
max. response at		≈ 480 nm	
cut-off XQ3457R		≈ 850 nm	
cut-off XQ3457, XQ3457G		≈ 650 nm	
cut-off XQ3457B		≈ 650 nm	
response curves		see Fig. 5	
Resolution			
Modulation depth, i.e. uncompensated amplitude response at 400 TV lines at centre of the picture.			13

Table 1

		XQ3457	XQ3457R	XQ3457G	XQ3457B
Highlight signal current	I_s	200 nA	150 nA	200 nA	150 nA
Beam current	I_b	400 nA	300 nA	400 nA	300 nA
Modulation depth at 400 TV lines (5 MHz) in %	typ.	50	40	50	55
	min.	40	32	40	40

Modulation transfer characteristics see Fig. 6.

Lag (typical values, no light bias applied). note 14, 15

Light source with a colour temperature of 2856 K.

Appropriate filter inserted in light path.

Table 2

	build-up lag I_s/I_b = 20/300 nA		decay lag I_s/I_b = 20/300 nA	
	60 ms	200 ms	60 ms	200 ms
XQ3457	95	≈ 100%	8	3 %
XQ3457G	95	≈ 100%	8	3 %
XQ3457R	95	≈ 100%	9	3,5%
XQ3457B	95	≈ 100%	10	4 %

Highlight handling capability with DBC. note 16

MECHANICAL DATA

Outlines

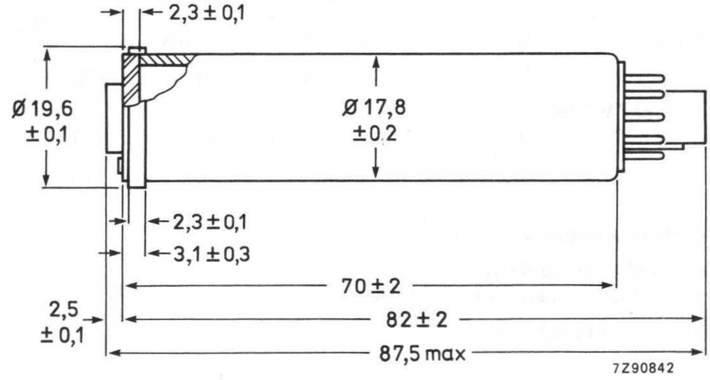

Fig. 1.

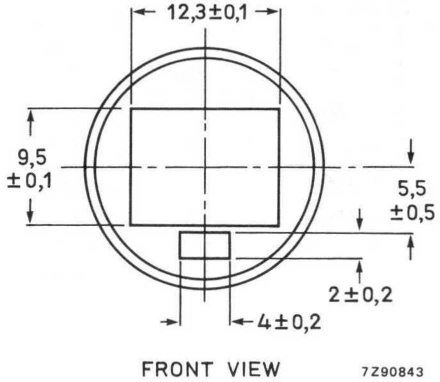

Fig. 2.

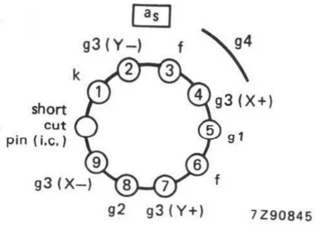

Fig. 4.

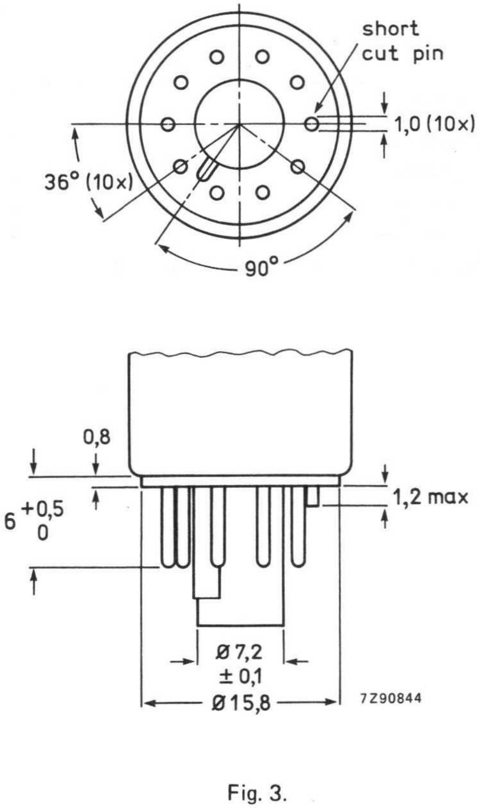

Fig. 3.

Mounting position: any

Mass: ≈ 19 g

NOTES, see also General Section

1. "Diode" electron gun is a triode gun operating in a diode mode, providing a very high beam reserve. Since the "Diode" gun operates with a positive grid 1 voltage, causing some grid current.

   N.B.
   Avoid continuous operation at high beam currents since this will shorten tube life. Full advantage of the high beam reserve to reduce comet-tailing and blooming can be made with DBC circuitry which, during highlights, feeds positive-going pulses derived from the video signal to grid 1, to increase the beam current momentarily.

2. The "Diode" gun operates with a positive ($\leqslant$ 10 V) grid 1 voltage (adjusted for correct beam settings, see note 9), hence draws some grid 1 current:
   without DBC: $\leqslant$ 3 mA (peak) with blanking
   with DBC: $\leqslant$ 5 mA (peak) with blanking measured with oscilloscope.
   The DBC circuitry should, in the case of highlights, supply positive-going pulses of 8 $V_{p\text{-}p}$ and up to 8 $mA_{p\text{-}p}$ peak to grid 1.

   N.B.
   Applying higher pulses than 8 V is not recommended since this will shorten tube life, impair resolution and may introduce oscillations.

3. Maximum d.c. value.

4. The tube can withstand short excursions up to 70 °C without damage or irreversible degradation in performance.

5. For short intervals. During storage the tube face shall be covered with the plastic hood provided; when the camera is idle the lens shall be capped, in stand-by also the beam will be cut-off.

6. The operating conditions and performance data quoted relate to operation in coil unit KV4722. See relevant data.

7. The beam current I_b, as obtained by adjusting the control grid (grid 1) voltage is set to 300 nA for R and B tubes, 400 nA for black and white and G tubes. I_b is not the actual current available in the scanning beam, but is defined as the maximum amount of signal current, I_s, that can be obtained with this beam.

8. The optimum voltage ratio V_{g3}/V_{g4} to minimize beam landing errors (preferably $<$ 1 V) depends on the type of coil unit used.

9. See relevant data of deflection/focusing assemblies.

10. Typical faceplate illumination level for the XQ3457 to produce 200 nA signal current will be approx. 10 lx. The signal currents stated for the colour tubes R, G and B will be obtained with an incident white light level (2856 K) on the filter approx. 25 lx. These figures are based on the filters described in note 11. For filter BG12, however, a thickness of 1 mm is chosen.

11. Measuring conditions: illuminance level before the filter 4,54 lx at a colour temperature of 2856 K and the appropriate filter inserted in the light path for the chrominance tubes. Filters used are:

XQ3457G	Schott	VG9	thickness	1 mm
XQ3457B	Schott	BG12	thickness	3 mm
XQ3457R	Schott	OG570	thickness	3 mm
	and Calflex	B1/K1		

For transmission curves see General Section.

NOTES (continued)

12. For true tonal rendition in monochrome cameras, and for true colorimetry in colour cameras, an integral filter to eliminate response to near infrared radiation must be incorporated in the optical system.

13. – Uncompensated amplitude response at 5 MHz at the centre of the picture.
    – The figures shown represent the horizontal amplitude response of the tube as obtained with lens aperture of f : 5.6.
    – The highlight signal current and beam current conditions are given, I_s = 200 nA/I_b = 400 nA for monochrome and G tubes, and I_s = 150 nA/I_b = 300 nA for R and B tubes.
    – The horizontal amplitude response can be raised by means of suitable correction circuits, which affect neither the vertical resolution nor the limiting resolution.

14. *Build up lag.* After 10 s of darkness. The figures represent typical signals in percentages of the ultimate signal current, obtained 60 ms or 200 ms respectively, after introduction of the illuminance.

    Decay lag. After the target has been illuminated for at least 5 s. The figures represent typical signals in percentages of the original signal current, 60 ms or 200 ms respectively, after removal of the illuminance.

15. An attractive reduction of lag, especially under low key conditions may be obtained when light bias (up to 5 nAp-p) is applied via the optical system. Infrared light with a wavelength > 600 mm in the light bias should be avoided.

16. – With DBC applied (see Note 2) the tube will properly handle highlights with a diameter of 10% of picture height and with a brightness corresponding to 16 times peak signal white.
    – The max. peak signal currents in the case of highlights will be 2,5 μA. Video preamplifiers must be designed to accommodate these.

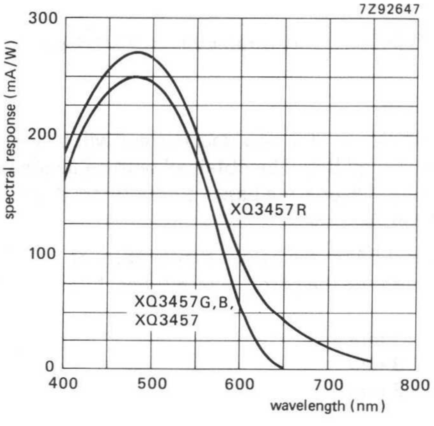

Fig. 5 Typical spectral response curves.

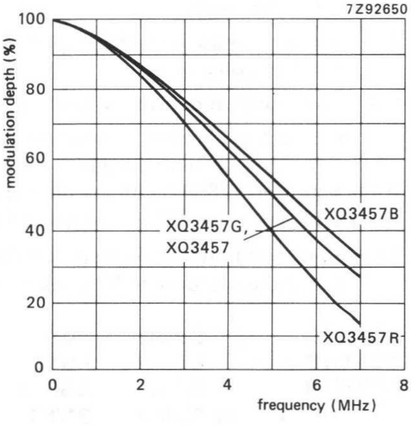

Fig. 6 Typical square-wave response curves.

CAMERA TUBES

18 mm (2/3 inch) diameter Plumbicon® television camera tubes with standard resolution leadoxide photoconductive target, intended for use in low-weight monochrome and colour cameras in broadcast, educational or industrial applications.

The XQ3467 series comprises the following versions:

XQ3467 for monochrome cameras
XQ3467R for the red channel of colour cameras
XQ3467G for the green channel
XQ3467B for the blue channel

Special features are:

- Low power consumption due to electrostatic focusing
- Low weight

QUICK REFERENCE DATA

Separate mesh					
Diameter	max. 18 mm (2/3 inch)				
Length	approx. 108				
Anti-halation glass disc, thickness	3,7 mm				
Focusing	electrostatic				
Deflection	magnetic				
Useful target area (scanning area)	6,6 mm x 8,8 mm				
Spectral response					
max. at	approx. 480 nm				
cut-off at	approx. 650 to 850 nm				
type	XQ3467	XQ3467R	XQ3467G	XQ3467B	
Sensitivity, typ.	375	95	150	36	μA/lm(F)
Resolution at 320 TV lines (4 MHz)	45	40	45	50	%
Heater	6 V, 75 mA				

OPTICAL DATA

Quality rectangle on photoconductive target (aspect ratio 3 : 4)	6,6 mm x 8,8 mm

Orientation of image on target

For correct orientation of the image on the target the horizontal scan should be essentially parallel to the plane passing through the tube axis and the index pin.

Faceplate	
thickness	2,3 ± 0,1 mm
refractive index	1,49
Anti-halation glass disc with AR-coating	
thickness	3,7 ± 0,1 mm
refractive index	1,52

® Registered trade mark for television camera tube.

ACCESSORIES

Socket	type 56604
Deflection coil unit	type KV4780 or equivalent

ELECTRICAL DATA

Heating

					notes
Indirect by a.c. or d.c.; parallel supply					
Heater voltage	V_f		6	V ± 5%	
Heater current, at $V_f = 6,0$ V	I_f	nom.	75	mA	

The heater voltage must never exceed 9 V r.m.s.
For optimum performance (lifetime and registration stability) use a stabilized supply.

Inter-electrode capacitance

Signal electrode to any other contact	C_{as}	typ.	2,5	pF

This capacitance increases slightly when the tube is inserted in the coil unit.

Deflection	magnetic
Focusing	electrostatic

LIMITING VALUES (Absolute maximum rating system)

All voltages are referred to the cathode, unless otherwise stated

					notes
Signal electrode voltage	V_{as}	max.	50	V	
Grid 6 voltage + grid 3 voltage (int. connected)	V_{g3+6}	max.	1200	V	
Grid 5 voltage	V_{g5}	max.	600	V	
Grid 4 voltage, focus	V_{g4}	max.	250	V	
Grid 2 voltage	V_{g2}	max.	350	V	
Grid 1 voltage, positive	V_{g1}	max.	0	V	
Grid 1 voltage, negative	$-V_{g1}$	max.	200	V	
Cathode to heater voltage, positive peak	$V_{kf\,p}$	max.	125	V	
Cathode to heater voltage, negative peak	$-V_{kf\,p}$	max.	50	V	
Cathode heating time before drawing cathode current	t_h	min.	1	min	
Ambient temperature, storage and operation	T_{amb}	max.	50	°C	
		min.	−30	°C	
Faceplate temperature, storage and operation	T	max.	50	°C	1
		min.	−30	°C	
Faceplate illuminance (intermittent)	E	max.	500	lx	2

OPERATING CONDITIONS AND PERFORMANCE

			notes
for a scanned area of 6,6 mm x 8,8 mm			3

Conditions

Cathode voltage	V_k	0	V	
Signal electrode voltage	V_{as}	45	V	
Beam current	I_b			4
Grid 6 voltage + grid 3 voltage	V_{g3+6}	1000	V	
Grid 5 voltage	V_{g5}	500	V	
Grid 4 voltage, focus	V_{g4}	90 to 130	V	
Grid 2 voltage	V_{g2}	300	V	
Grid 1 voltage	V_{g1}	−10 to −30	V	4
Blanking voltage on grid 1, peak to peak	$V_{g1\ p\text{-}p}$	75	V	
Faceplate illuminance	E	0 to 10	lx	5
Faceplate temperature	T	20 to 45	°C	

Electron gun characteristics

Cut-off				
Grid 1 voltage for cut-off without blanking	V_{g1}	−30 to −100	V	
Grid 1 voltage for 400 nA beam current	V_{g1w}	−10 to −30	V	4
Blanking voltage, peak to peak on grid 1	$V_{g1\ p\text{-}p}$	75	V	

Performance

Dark current	I_d		⩽	1,0	nA	
Sensitivity at colour temperature of illuminance = 2856 K						6
XQ3467	min.	325	typ.	375	μA/lm	
XQ3467R	min.	75	typ.	95	μA/lmF	
XQ3467G	min.	110	typ.	140	μA/lmF	
XQ3467B	min.	32	typ.	36	μA/lmF	
Gamma of transfer characteristic				0,95 + 0,05		
Spectral response:						
max. response at			≈	480	nm	7
cut-off XQ3467R			≈	850	nm	
cut-off XQ3467, XQ3467G			≈	650 to 850	nm	
cut-off XQ3467B			≈	650	nm	
response curves			see Fig. 1			

Resolution — notes

Modulation depth, i.e. uncompensated amplitude response at 320 TV lines at the centre of the picture. — 8

		XQ3467	XQ3467R	XQ3467G	XQ3467B
Highlight signal current	I_s	200 nA	150 nA	200 nA	150 nA
Beam current	I_b	400 nA	300 nA	400 nA	300 nA
Modulation depth at 320 TV lines (4 MHz) in %	typ.	45 %	40 %	45 %	50 %
	min.	35 %	30 %	35 %	40 %

Modulation transfer characteristics — see Fig. 2

Lag (typical values, no light bias applied) — 9, 10

Light source with a colour temperature of 2856 K

Appropriate filter inserted in light path

Low key conditions (percentages)

	build-up lag		decay lag	
	I_s/I_b = 20/300 nA		I_s/I_b = 20/300 nA	
	60 ms	200 ms	60 ms	200 ms
XQ3467	95	~ 100	8,0	3,0
XQ3467R	95	~ 100	8,0	3,0
XQ3467G	95	~ 100	8,0	3,0
XQ3467B	95	~ 100	9,0	3,5

MECHANICAL DATA

Dimensions in mm

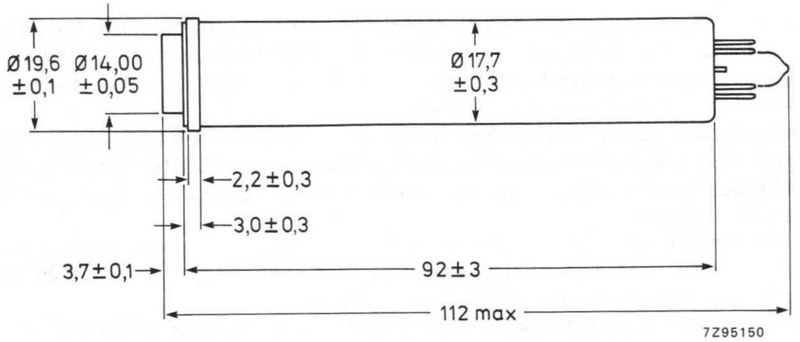

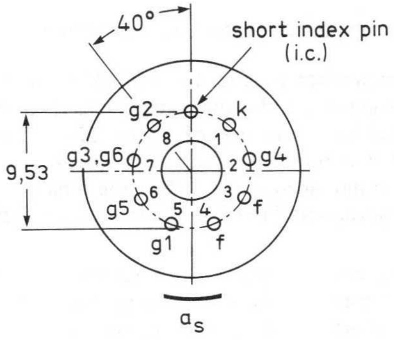

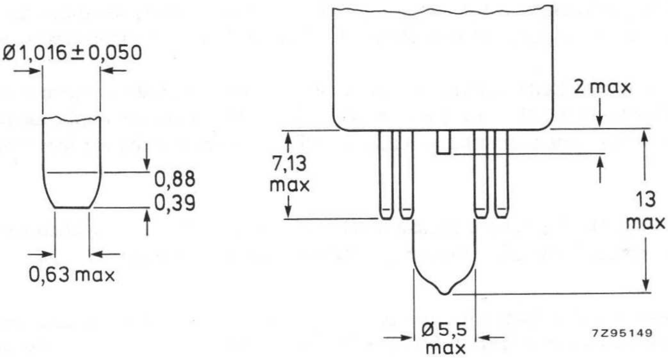

Mounting position: any

Mass: ≈ 27 g

Base:

NOTES, see also General Section.

1. The tube can withstand short excursions up to 70 ^{o}C without damage or irreversible degradation in performance.
2. For short intervals. During storage the tube face shall be covered with the plastic hood provided; when the camera is idle the lens shall be capped, in stand-by also the beam will be cut-off.
3. The operating conditions and performance data quoted relate to operation in the coil unit KV4780. See relevant data of deflection/focusing assemblies.
4. The beam current I_b, as obtained by adjusting the control grid voltage (grid 1) is set at 300 nA for R and B tubes, 400 nA for black/white, and G tubes. I_b is not the total current available in the scanning beam, but is defined as the maximum amount of signal current, I_s, that can be obtained with this beam.
   In the performance figures, e.g. for resolution and lag, the signal current and beam current conditions are given, e.g. as I_s/I_b = 20/300 nA. This means: with a signal current of 20 nA and a beam setting which just allows a signal current of 300 nA.
   N.B. The signal currents are measured with an integrating instrument connected in the signal electrode lead and a uniform illumination of the scanned area.
   The peak signal currents as measured on a waveform oscilloscope will be a factor α larger.
   $\alpha = \frac{100}{100-\beta}$; β being the total blanking time in %: for the CCIR system α amounts to 1,3).
5. Typical faceplate illumination level for the XQ3467 to produce 200 nA signal current will be approx. 10 lx. The signal currents stated for the colour tubes R, G and B will be obtained with an incident white light level (2856 K) on the filter of approx. 25 lx. These figures are based on the filters described in note 11. For filter BG12, however, a thickness of 1 mm is chosen.
6. Measuring conditions: illuminance level before the filter approx. 4,54 lux at a colour temperature of 2856 K and the appropriate filter inserted in the light path for the chrominance tubes.
   Filters used are:

XQ3467G	Schott	VG9	thickness	1 mm
XQ3467B	Schott	BG12	thickness	3 mm
XQ3467R	Schott	OG570	thickness	3 mm
	and Calflex	B1/K1		

   For transmission curves see General Section.
7. For true tonal rendition in black/white cameras and for true colorimetry in colour cameras an integral filter to eliminate response to near infrared radiation should be incorporated in the optical system.
8. As measured with a 50 mm Leitz Summicron lens having a sine response of approximately 80% at 30,3 lp/mm (400 TV lines at 6,6 mm x 8,8 mm) at f : 5,6. The horizontal amplitude response can be raised by means of suitable correction circuits, which affect neither the vertical resolution nor the limiting resolution.
9. **Build-up lag**
   After 10 s of darkness. The figures are typical percentages of the ultimate signal current obtained 60 ms and 200 ms, respectively, after the introduction of the illuminance.

   Decay lag
   After the target has been illuminated for at least 5 s. The figures represent typical signals in percentages of the original signal current 60 ms and 200 ms, respectively, after removal of the illuminance.
10. A reduction lag, especially under low key conditions is obtained when light bias up to 5 nA (peak) is applied via the optical system. Infrared light with a wavelength > 600 nm in the light bias should be avoided.

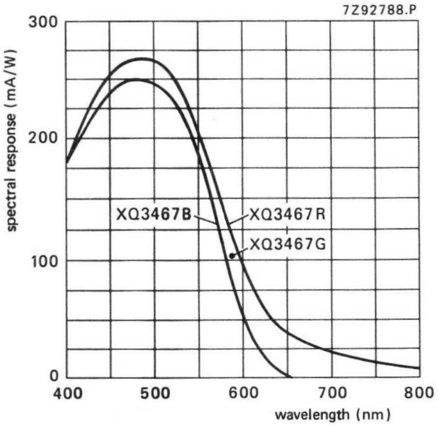

Fig. 1 Typical spectral responses.

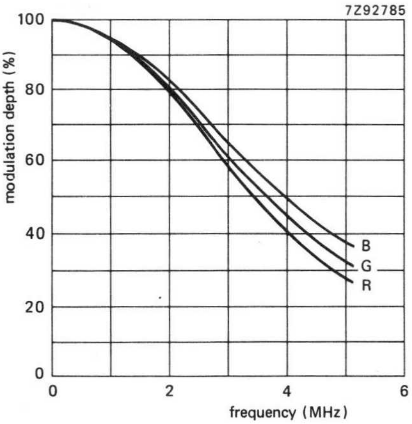

Fig. 2 Typical square wave response curves.

CAMERA TUBES

⅔ inch HS "Diode" Plumbicon® television camera tubes with high resolution lead-oxide photoconductive target for use in low weight high quality monochrome and colour cameras in broadcast, educational or industrial applications.

The XQ4187-series comprises the following versions:
- XQ4187 for monochrome cameras
- XQ4187R for the red channel of colour cameras
- XQ4187G for the green channel
- XQ4187B for the blue channel

Special features are:
- High stability construction (HS).
- "Diode" electron gun for D.B.C. (dynamic beam control) to minimize comet-tailing and blooming (notes 1 and 2).
- Low output capacitance, achieved by a special signal plate with contact through the window.
- Low deflection field damping by wall electrodes.
- Reduced line pick-up due to side connection of the mesh.
- Low power consumption due to electrostatic focusing.
- Low weight and small size.

QUICK REFERENCE DATA

"Diode" electron gun			
Diameter	max.	22	mm
Length	approx.	92	mm
Provided with anti-halation glass disc, thickness		2,5	mm
Focusing	electrostatic		
Deflection	magnetic		
Useful target area (scanning area)		6,6 x 8,8	mm
Spectral response			
maximum at	approx.	450	nm
cut-off at	approx.	650 to 850	nm

type	XQ4187	XQ4187R	XQ4187G	XQ4187B	
Sensitivity, typical	320	90	130	40	μA/lm(F)
Resolution at 400 TV lines (5 MHz), typical	43	34	43	45	%
Heater	8,7 V, 53 mA				

OPTICAL DATA

Quality rectangle on photoconductive target (aspect ratio 3 : 4) 6,6 mm x 8,8 mm

Orientation of image on target

For correct orientation of the image on the target the vertical scan should be essentially parallel to the plane passing through the tube axis and the Index slot at the base. Mounted in the deflection coil, the target contact should be at the upper side during scanning.

® Registered trade mark for television camera tube.

Faceplate	
thickness	2,3 ± 0,1 mm
refractive index	1,52
Anti-halation glass disc provided with anti-reflective coating	
thickness	2,5 ± 0,1 mm
refractive index	1,52

ACCESSORIES

Socket is integrated in the deflection coil	
Deflection coil unit	type KV4736-9

ELECTRICAL DATA

Heating

Indirect by a.c. or d.c.: parallel supply

Heater voltage	V_f		8,7 V ± 5%
Heater current, at V_f = 8,7 V	I_f	nom.	53 mA
The heater voltage must never exceed			12 V r.m.s.

For optimum performance (lifetime and registration stability) stabilization of the heater voltage is recommended.

Capacitance

Signal electrode to all (with floating indium ring)	C_{as}	approx.	1,6 pF

This capacitance, which is effectively the output impedance, increases when the tube is inserted in the coil unit.

Deflection	magnetic
Focusing	electrostatic

LIMITING VALUES (Absolute maximum rating system)

All voltages are referred to the cathode, unless otherwise stated.

					notes
Signal electrode voltage	V_{as}	max.	50	V	
Grid 4 voltage	V_{g4}	max.	1200	V	
Grid 3 voltage	V_{g3}	max.	500	V	
Voltage between grid 4 and grid 3	$V_{g4/g3}$	max.	850	V	
Grid 2 voltage, focus	V_{g2}	max.	75	V	
Grid 1 voltage, positive	V_{g1}	max.	75	V	3
Grid 1 voltage, negative	$-V_{g1}$	max.	50	V	3
Grid 1 current (≈ I_K current)	I_{g1} d.c.	max.	3,5	mA	
Grid 1 current (peak current with D.B.C.)	I_{g1p}	max.	12	mA	2
Cathode to heater voltage, positive peak	V_{kfp}	max.	60	V	
Cathode to heater voltage, negative peak	$-V_{kfp}$	max.	10	V	3
Cathode heating time before drawing cathode current	t_h	min.	1	min	
Ambient temperature, storage and operation	T_{amb}	max. min.	50 −30	°C °C	
Faceplate temperature, storage and operation	T	max. min.	50 −30	°C °C	4
Faceplate illuminance (intermittent)	E	max.	500	lx	5

DEVELOPMENT DATA

OPERATING CONDITIONS AND PERFORMANCE

		notes
for a scanned area of 6,6 mm x 8,8 mm		6

Conditions

Cathode voltage	V_k	0 V	
Signal electrode voltage	V_{as}	45 V	
Beam current	I_b		7
Grid 4 voltage	V_{g4}	1100 V	
Grid 3 voltage	V_{g3}	400 V	
Grid 2 voltage, focus	V_{g2}	52 V ± 3 V	
Grid 1 voltage	V_{g1}		7
Faceplate illuminance	E	0 to 10 lx	8
Faceplate temperature	T	20 to 45 °C	

Electron gun characteristics

Cut-off

Grid 1 voltage for cut-off	V_{g1}	−5 to 0 V
Grid 1 voltage for 400 nA beam current	V_{g1w}	5 to 10 V

Grid currents at	I_b	400 nA	max. D.B.C.
grid 1	I_{g1}	max. 3	10 mA
grid 3	I_{g3}	max. 100	200 μA
grid 4	I_{g4}	max. 4	10 μA

Performance

Dark current	I_d	⩽	2 nA	
Sensitivity at colour temperature of illuminance = 2856 K				9
XQ4187	min. 275		typ. 320 μA/lm	
XQ4187R	min. 75		typ. 90 μA/lmF	
XQ4187G	min. 105		typ. 130 μA/lmF	
XQ4187B	min. 35		typ. 40 μA/lmF	
Gamma of transfer characteristic			0,95 + 0,05	
Spectral response:				10
max. response at		≈	450 nm	
cut-off XQ4187R		≈	850 nm	
cut-off XQ4187		≈	650 to 850 nm	
cut-off XQ4187B, XQ4187G		≈	650 nm	
response curves			see Fig. 1	

Resolution — notes

Modulation depth, i.e. uncompensated amplitude response at 400 TV lines (5 MHz) at the centre of the picture. 11

		XQ4187	XQ4187R	XQ4187G	XQ4187B
Signal current	I_s	200	150 nA	200 nA	150 nA
Beam current	I_b	400	300 nA	400 nA	300 nA
Modulation depth at 400 TV lines (5 MHz)	typ.	43	34 %	43 %	45 %
	min.	40	32 %	40 %	40 %

Modulation transfer characteristics — see Fig. 2

Lag (typical values, no light bias applied) 12, 13

Light source with a colour temperature of 2856 K

Appropriate filter inserted in light path

Low key conditions

	build-up lag		decay lag	
	I_s/I_b = 20/300 nA		I_s/I_b = 20/300 nA	
	60 ms	200 ms	60 ms	200 ms
XQ4187, G	95%	≈ 100%	6%	2%
XQ4187R	95%	≈ 100%	7%	2,5%
XQ4187B	95%	≈ 100%	7%	3%

DEVELOPMENT DATA

Highlight handling capability with D.B.C. 14

MECHANICAL DATA

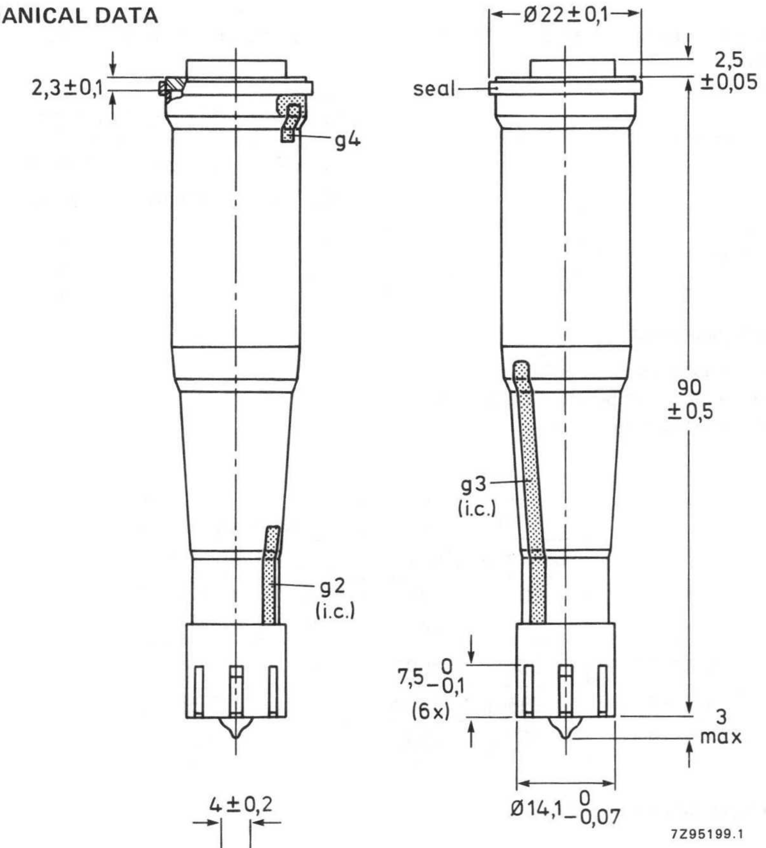

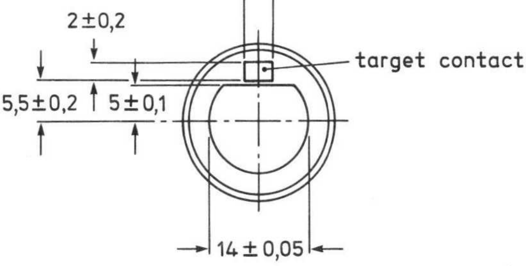

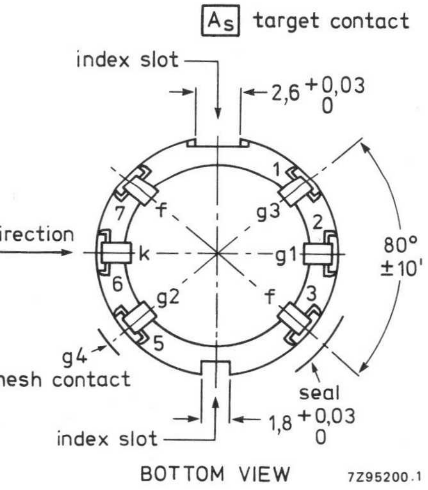

Mounting position: any

Mass: ≈ 20 g

NOTES, see also General Section.

1. Avoid continuous operation at high beam currents since this will shorten tube life. Full advantage of the high beam reserve to reduce comet-tailing and blooming can be made with DBC circuitry which, during highlights, feeds positive-going pulses derived from the video signal to grid 1, to increase the beam current momentarily.
2. The "diode" gun operates with a positive (⩽ 25 V) grid 1 voltage adjusted for correct beam settings, see note 7.
   The DBC circuitry should, in the case of highlights, supply positive-going pulses with a maximum of 50 V to grid 1 above the normal V_{g1} setting for I_b = 400 nA.
   N.B. Applying higher pulses than 50 V is not recommended since this will shorten tube life, impair resolution and may introduce oscillations.
3. The following circuitry and tube settings are recommended.

DEVELOPMENT DATA

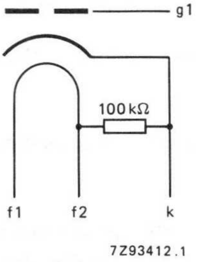

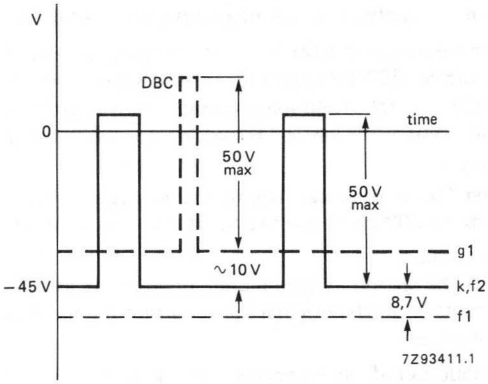

4. The tube can withstand short excursions up to 70 °C without damage or irreversible degradation in performance.
5. During storage the tube face shall be covered with the plastic hood provided; when the camera is idle the lens shall be capped, in stand-by also the beam will be cut-off.
6. The operating conditions and performance data quoted relate to operation in the coil unit KV4736-9. See relevant data of deflection/focusing assemblies.
7. The beam current I_b, as obtained by adjusting the control grid (grid 1) voltage is set to 300 nA for R and B tubes, 400 nA for black and white and G tubes. I_b is not the actual current available in the scanning beam, but is defined as the maximum amount of signal current, I_s, that can be obtained with this beam.
   In the performance figures for lag, the signal current and beam current conditions are given, e.g. as I_s/I_b = 20/300 nA. This means: with a signal current of 20 nA and a beam setting which just allows a signal current of 300 nA.
   N.B. The signal currents are measured with an integrating instrument connected in the signal electrode lead and a uniform illumination of the scanned area. The peak signal currents as measured on a waveform oscilloscope will be a factor α larger.
   $\alpha = \frac{100}{100-\beta}$; β being the total blanking time in %; for the CCIR system α = 1,3.

NOTES (continued)

8. Typical faceplate illumination level for the XQ4187 to produce 200 nA signal current will be approx. 10 lx. The signal currents stated for the colour tubes R, G and B will be obtained with an incident white light level (2856 K) on the filter of approx. 25 lx. These figures are based on the filters described in note 9. For filter BG12, however, a thickness of 1 mm is chosen.

9. Measuring conditions.
Illuminance level 4,54 lx at a colour temperature of 2856 K. Filters are inserted in the light path for the chrominance tubes.
Filters used are:
XQ4187R: B1/K1 and Schott OG570, thickness 3 mm.
XQ4187G: Schott VG9, thickness 1 mm.
XQ4187B: Schott BG12, thickness 3 mm.

   For transmission curves see General Section.

10. For true tonal rendition in black/white cameras, and for true colorimetry in colour cameras, an integral filter to eliminate response to near infrared radiation should be incorporated in the optical system, together with an integral B1/K1 filter or equivalent.

11. As measured with a 50 mm Leitz Summicron lens having a sine response of approx. 80% at 30 lp/mm (400 TV lines at 6,6 mm x 8,8 mm) at f : 5,6.
The horizontal amplitude response can be raised by means of suitable correction circuits, which affect neither the vertical resolution nor the limiting resolution.

12. Build-up lag.
After 10 s of darkness. The figures are typical percentages of the ultimate signal current obtained 60 ms or 200 ms, respectively, after introduction of the illuminance.

    Decay lag.
    After the target has been illuminated for at least 5 s. The figures respresent typical signal in percentages of the original signal current 60 ms or 200 ms, respectively, after removal of the illuminance.

13. A reduction of lag, especially under low key conditions, is to be obtained when light bias up to 5 nA_p is applied via the optical system. Infrared light with a wavelength $>$ 600 nm in the light bias should be avoided.

14. With D.B.C. applied (see notes 2 and 3) the tube will properly handle highlights with a diameter of 10% of the picture height and with a brightness corresponding to 8 times the brightness for normal peak signal. The maximum peak signal currents in the case of highlights will be 1400 nA. Video amplifiers should be designed to accommodate these.

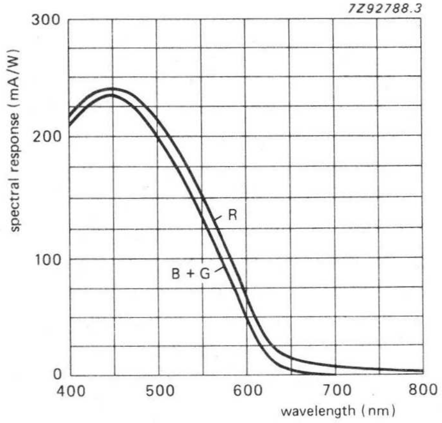

Fig. 1 Typical spectral response curves.

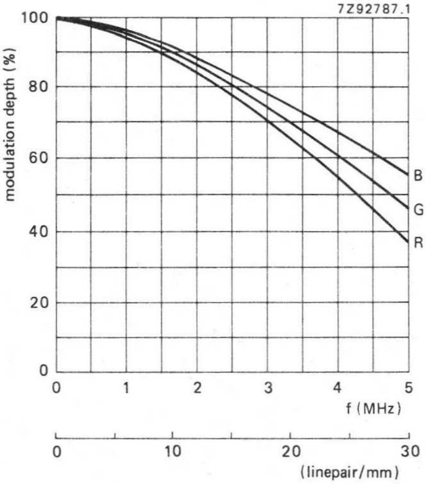

Fig. 2 Typical square wave response curves.

DEVELOPMENT DATA

14 mm dia. PLUMBICON TUBES

CAMERA TUBES

14 mm (½ inch) HS "Diode" Plumbicon® television camera tubes with high resolution lead-oxide photoconductive target for use in low weight high quality colour cameras in broadcast, educational or industrial applications.

The XQ4087 series comprises the following versions:

XQ4087R	for the red channel of colour cameras
XQ4087G	for the green channel
XQ4087B	for the blue channel

Special features are:

- High stability construction (HS).
- "Diode" electron gun for D.B.C. (dynamic beam control) to minimize comet-tailing and blooming (notes 1 and 2).
- Low output capacitance, achieved by a special signal plate with contact through the window.
- Low deflection field damping by wall electrodes.
- Reduced line pick-up due to side connection of the mesh.
- Low power consumption due to electrostatic focusing.
- Low weight and small size.

QUICK REFERENCE DATA

"Diode" electron gun				
Diameter		max.	18	mm
Length		approx.	73	mm
Provided with anti-halation glass disc, thickness			3	mm
Focusing		electrostatic		
Deflection		magnetic		
Useful target area (scanning area)			4,8 mm x 6,4	mm
Spectral response				
max. at		approx.	430	nm
cut-off at		approx.	650 to 850	nm
type	XQ4087R	XQ4087G	XQ4087B	
Sensitivity, typ.	85	100	25	μA/lmF
Resolution at 320 TV lines (4 MHz)	40	45	50	%
Heater			9 V, 55	mA

OPTICAL DATA

Quality rectangle on photoconductive target (aspect ratio 3 : 4) 4,8 mm x 6,4 mm

Orientation of image on target

For correct orientation of the image on the target the vertical scan should be essentially parallel to the plane passing through the tube axis and the index slot at the base. Mounted in the deflection coil, the target contact should be at the upper side during scanning.

® Registered trade mark for television camera tubes.

Faceplate	
thickness	1,6 ± 0,1 mm
refractive index	1,51
Anti-halation glass disc with AR-coating	
thickness	3 ± 0,1 mm
refractive index	1,51

ACCESSORIES

Socket is integrated in the deflection coil.

Deflection coil unit — type AT1120

ELECTRICAL DATA

Heating

Indirect by a.c. or d.c.; parallel supply

Heater voltage	V_f		9 V ± 5%
Heater current, at V_f = 9,0 V	I_f	nom.	55 mA

The heater voltage must never exceed 12 V r.m.s. For optimum performance (lifetime and registration stability) stabilization of the heater voltage is recommended.

Capacitance

Signal electrode to all	C_{as}	approx.	1,7 pF

This capacitance, which is effectively the output impedance, increases when the tube is inserted in the coil unit.

Deflection	magnetic
Focusing	electrostatic

LIMITING VALUES (Absolute maximum rating system)

All voltages are referred to the cathode, unless otherwise stated.

					notes
Signal electrode voltage	V_{as}	max.	30	V	
Grid 4 voltage	V_{g4}	max.	850	V	
Grid 3 voltage	V_{g3}	max.	350	V	
Voltage between grid 4 and grid 3	$V_{g4/g3}$	max.	600	V	
Grid 2 voltage, focus	V_{g2}	max.	50	V	
Grid 1 voltage, positive	V_{g1}	max.	80	V	
Grid 1 voltage, negative	$-V_{g1}$	max.	50	V	
Grid 1 current ($\approx I_K$ current), with D.B.C.	$I_{g1}dc$	max.	5	mA	
Grid 1 current (peak current with D.B.C.)	I_{g1p}	max.	12	mA	
Cathode to heater voltage, positive peak	V_{kfp}	max.	50	V	
Cathode to heater voltage, negative peak	$-V_{kfp}$	max.	50	V	3
Cathode heating time before drawing cathode current	t_h	min.	1	min	
Ambient temperature, storage and operation	T_{amb}	max. min.	50 −30	°C °C	
Faceplate temperature, storage and operation	T	max. min.	50 −30	°C °C	4
Faceplate illuminance (intermittent)	E	max.	100	lx	5

OPERATING CONDITIONS AND PERFORMANCE

				notes
for a scanned area of 4,8 mm x 6,4 mm				6

Conditions

Cathode voltage	V_k	0	V	
Signal electrode voltage	V_{as}	25	V	
Beam current	I_b			7
Grid 4 voltage	V_{g4}	750	V	
Grid 3 voltage	V_{g3}	250	V	
Grid 2 voltage, focus	V_{g2}	30 ± 3	V	
Grid 1 voltage	V_{g1}			7
Blanking voltage on grid 1, peak to peak without D.B.C.	$V_{g1\,p\text{-}p}$	30	V	
Faceplate illuminance	E	0 to 10	lx	8
Faceplate temperature	T	20 to 45	°C	

Electron gun characteristics

Cut-off				
Grid 1 voltage for cut-off without blanking	V_{g1}	−5 to 0	V	
Grid 1 voltage for 200 nA beam current	V_{g1w}	⩽ 25	V	7
Blanking voltage, peak to peak				
on grid 1, without D.B.C.	$V_{g1\,p\text{-}p}$	30	V	
on cathode	$V_{k\,p\text{-}p}$	30	V	

Grid currents at	I_b		200 nA	max. D.B.C.	
grid 1	I_{g1}	max.	3,5	12	mA
grid 3	I_{g3}	max.	10	40	µA
grid 4	I_{g4}	max.	1	4	µA

Performance

Dark current	I_d				⩽ 1,0	nA	
Sensitivity at colour temperature of illuminance = 2856 K							9
XQ4087R		min.	65	typ.	85	µA/lmF	
XQ4087G		min.	75	typ.	100	µA/lmF	
XQ4087B		min.	22	typ.	25	µA/lmF	
Gamma of transfer characteristic					0,95 + 0,05		
Spectral response:							10
max. response at			≈		430	nm	
cut-off XQ4087R			≈		850	nm	
cut-off XQ4087G			≈		650 to 850	nm	
cut-off XQ4087B			≈		650	nm	
response curves			see Fig. 1				

Resolution		notes
Modulation depth, i.e. uncompensated amplitude response at 320 TV lines (4 MHz) at the centre of the picture.		11

		XQ4087R	XQ4087G	XQ4087B
Signal current	I_s	50 nA	100 nA	50 nA
Beam current	I_b	100 nA	200 nA	100 nA
Modulation depth at 320 TV lines (4 MHz)	typ.	40 %	45 %	50 %
	min.	30 %	35 %	40 %

Modulation transfer characteristics — see Fig. 2

Lag (typical values, no light bias applied) — 12, 13

Light source with a colour temperature of 2856 K

Appropriate filter inserted in light path

Low key conditions

	build-up lag		decay lag	
	I_s/I_b = 20/300 nA		I_s/I_b = 20/300 nA	
	60 ms	200 ms	60 ms	200 ms
XQ4087G	95	~ 100	8,0	3,0
XQ4087R	95	~ 100	8,0	3,0
XQ4087B	95	~ 100	9,0	3,5

Highlight handling capability with D.B.C. — 14

MECHANICAL DATA

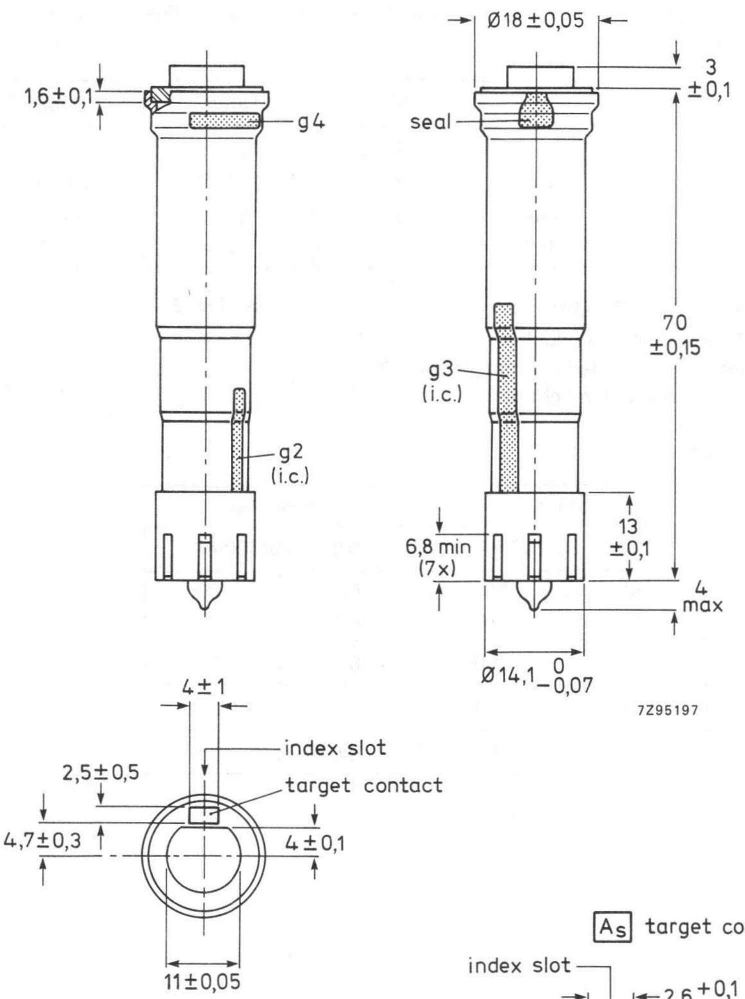

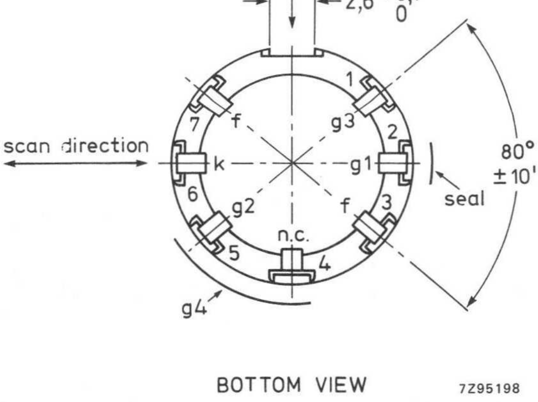

BOTTOM VIEW

Mounting position: any

Mass : ≈ 23 g

Base : EIA E7-91

NOTES, see also General Section.

1. Avoid continuous operation at high beam currents since this will shorten tube life. Full advantage of the high beam reserve to reduce comet-tailing and blooming can be made with D.B.C. circuitry which, during highlights, feeds positive-going pulses derived from the video signal to grid 1 to increase the beam current momentarily.
2. The diode gun operates with a positive ($\leqslant$ 25 V) grid 1 voltage adjusted for correct beam currents, see note 7. The D.B.C. circuitry should, in the case of highlights, supply positive-going pulses with a maximum of 30 V to grid 1 above the normal V_{g1} setting for I_b = 200 nA.
   N.B. Applying higher pulses than 30 V peak is not recommended since this will shorten the tube life, impair resolution and may cause oscillations.
3. The resistance of the external circuitry between K and F should be at least 1000 Ω when V_f is positive with respect to V_k.
4. Short temperature excursions up to 70 °C duringoperation are allowed.
5. During storage cover the tube face with the plastic hood provided; when the camera is idle cap the lens. In stand-by also the beam will be cut-off.
6. The operating conditions and performance quoted relate to operation in the coil unit AT1120. See relevant data of deflection/focusing assemblies.
7. The beam current I_b, as obtained by adjusting the control grid voltage (grid 1) is set at 100 nA for R and B tubes, 200 nA for G tubes. I_b is not the total current available in the scanning beam, but is defined as the maximum amount of signal current, I_s, that can be obtained with this beam.
   In the performance figures for lag, the signal current and beam current conditions are given, e.g. as I_s/I_b = 20/300 nA. This means: with a signal current of 20 nA and a beam setting which just allows a signal current of 300 nA.
   N.B. The signal currents are measured with an integrating instrument connected in the signal electrode lead and a uniform illumination of the scanned area.
   The peak signal currents as measured on a waveform oscilloscope will be a factor α larger.
   $\alpha = \frac{100}{100 - \beta}$; β being the total blanking time in %: for the CCIR system $\alpha = 1{,}3$.
8. Typical faceplate illumination level for the XQ4087 to produce 100 nA signal current will be approx. 12 lx. The signal currents stated for the colour tubes R, G and B will be obtained with an incident white light level (2856 K) on the filter of approx. 25 lx. These figures are based on the filters described in note 9. For filter BG12, however, a thickness of 1 mm is chosen.
9. Measuring conditions.
   Illuminance level 4,54 lx at a colour temperature of 2856 K. Filters are inserted in the light path for the chrominance tubes.
   Filters used for
   XQ4087R: B1/K1 and Schott OG570, thickness 3 mm.
   XQ4087G: B1/K1 and Schott VG9, thickness 1 mm.
   XQ4087B: B1/K1 and Schott BG12, thickness 3 mm.

   For transmission curves see General Section.

NOTES, continued

10. For true tonal rendition in black/white cameras, and for true colorimetry in colour cameras, an integral filter to eliminate response to near infrared radiation should be incorporated in the optical system, together with an integral B1/K1 filter or equivalent.
11. As measured with 50 mm Leitz Summicron lens having a sine response of approx. 80% at 32,5 lp/mm (320 TV lines at 4,8 mm x 6,4 mm) at f : 5,6.
    The horizontal amplitude response can be raised by means of suitable correction circuits, which affect neither the vertical resolution nor the limiting resolution.
12. Build-up lag.
    After 10 s of darkness. The figures are typical percentages of the ultimate signal current obtained 60 ms or 200 ms, respectively, after introduction of the illuminance.

    Decay lag.
    After the target has been illuminated for at least 5 s. The figures represent typical signals in percentages of the original signal current 60 ms or 200 ms, respectively, after removal of the illuminance.
13. A reduction of lag, especially under low key conditions, is to be obtained when light bias is applied via the optical system. Infrared light with a wavelength > 600 nm in the light bias should be avoided.
14. With D.B.C. applied (see note 2) the tube will properly handle highlights with a diameter of 10% of the picture height and with a brightness corresponding to 8 times the brightness for normal peak signal. The maximum peak signal currents in the case of highlights will be 800 nA. Video amplifiers should be designed to accommodate these.

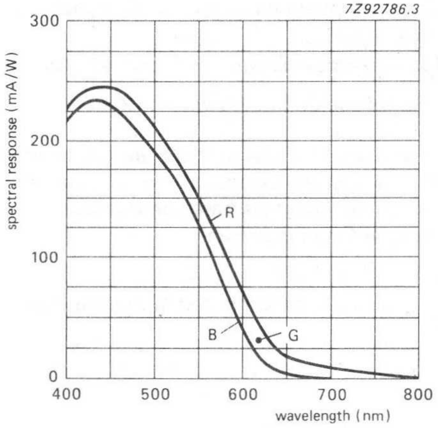

Fig. 1 Typical spectral responses.

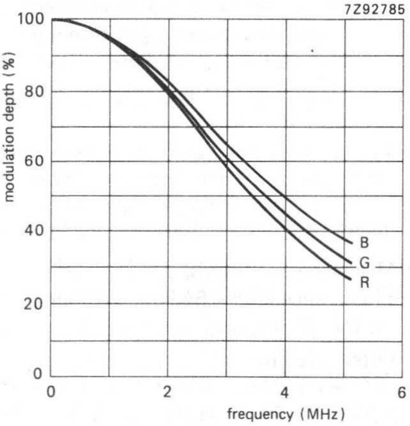

Fig. 2 Typical square wave response curves.

DEFLECTION AND FOCUSING ASSEMBLIES

SURVEY

tube diameter	type number and cat. number	triplet or single	inductance mH		resistance Ω			current mA			remarks
			line coils	frame coils	line coils	frame coils	focus coils	p-p line	p-p frame	d.c. focus	
30 mm (1¼")	AT1130T 3122 137 18880	T	0,84	5,5	2,1	14,5	1125	180	55	35	rear loading + alignment coils
	AT1130S 3122 137 18890	S	0,84	5,5	2,1	14,5	1125	180	55	35	rear loading + alignment coils
25 mm (1")	AT1116/06 3122 137 15040	T	0,79	28	2,2	62	140	280	34	108	front loading + alignment coils
	AT1116S 3122 137 15050	S	0,79	28	2,2	62	140	280	34	108	front loading + alignment coils
	AT1126/03T 3322 154 61000	T	0,8	4,4	2,2	10	1300	230	80	30	rear loading + alignment coils
	AT1126/03S 3322 154 60800	S	0,8	4,4	2,2	10	1300	230	80	30	rear loading + alignment coils
18 mm (2/3")	AT1109/01 3122 137 18280	T	0,91	2,8	3,8	12,7	60	260	114	120	rear loading + alignment rings
	AT1109/01S 3122 137 18290	S	0,91	2,8	3,8	12,7	60	260	114	120	rear loading + alignment rings
	AT1109/10 3122 137 18730	T	0,91	2,8	3,8	12,7	60	230	104	115	for L.O.C. tubes, alignment rings

	AT1109/16S 3322 154 60000	S	0,91	2,8	3,8	12,7	60	230	104	115	for L.O.C. tubes, alignment coils
	AT1109/16T 3322 154 60600	T	0,91	2,8	3,8	12,7	60	230	104	115	for L.O.C. tubes, alignment coils
	KV4722 9390 304 60000	S	–	–	–	–	22,7	–	–	201	for M.S. tubes
	KV4736-9AT 9390 309 50000	T	1,15	2,41	4,5	15,4	–	185	95	20	for H.S. tubes
	KV4736-9CT 9390 309 00000	T	1,15	2,41	4,5	15,4	–	185	95	20	for H.S. tubes
	KV4780 9390 304 70000	S	1,17	5,3	5,03	33	–	75	30	–	for tubes with electrostatic focus
14 mm (½″)	AT1120S 3122 137 18870	S	0,325	1,1	6,2	14,1	–	90	92	–	for H.S. tubes
	AT1120T 3122 137 18860	T	0,325	1,1	6,2	14,1	–	190	92	–	for H.S. tubes

DEFLECTION UNITS FOR 2/3-INCH PLUMBICON TUBE

QUICK REFERENCE DATA

	inductance	resistance
Line deflection coils	0,91 mH	3,8 Ω
Frame deflection coils	2,8 mH	12,7 Ω
Focus coil		60 Ω

APPLICATION

The AT1109/01 is a triplet of rear-loaded deflection units for use in colour television cameras using 2/3 inch pick-up tubes e.g. Plumbicon® tubes, types XQ1427 and XQ2427.

Their small dimensions and low weight make them specially suitable for use in portable ENG cameras.

DESCRIPTION

The deflection units contain the deflection and focus coils and are provided with permanent magnet alignment rings. The effective alignment field intensities and directions can be adjusted, the minimum field strength position is indicated. The focus coil is situated inside the deflection coils, hence the focus power is reduced.
The housing consists of a mu-metal can for optimum screening from external magnetic fields and to form the required magnetic circuit for the deflection fields.
The camera tubes are secured in position by an aluminium nut-ring at the rear of the units and by means of a nylon glass tube.
The target contact can be removed and replaced by a contact of own design, e.g. incorporating a video preamplifier.

Warning

No deformation of the calibrated mu-metal housing is allowed as this will strongly influence the performance and adjustments of the units.

Catalogue number

The catalogue number of the triplet is 3122 137 18280.
The catalogue number of a single unit, AT1109/01S, is 3122 137 18290.

® Registered trade mark for television camera tubes.

MECHANICAL DATA

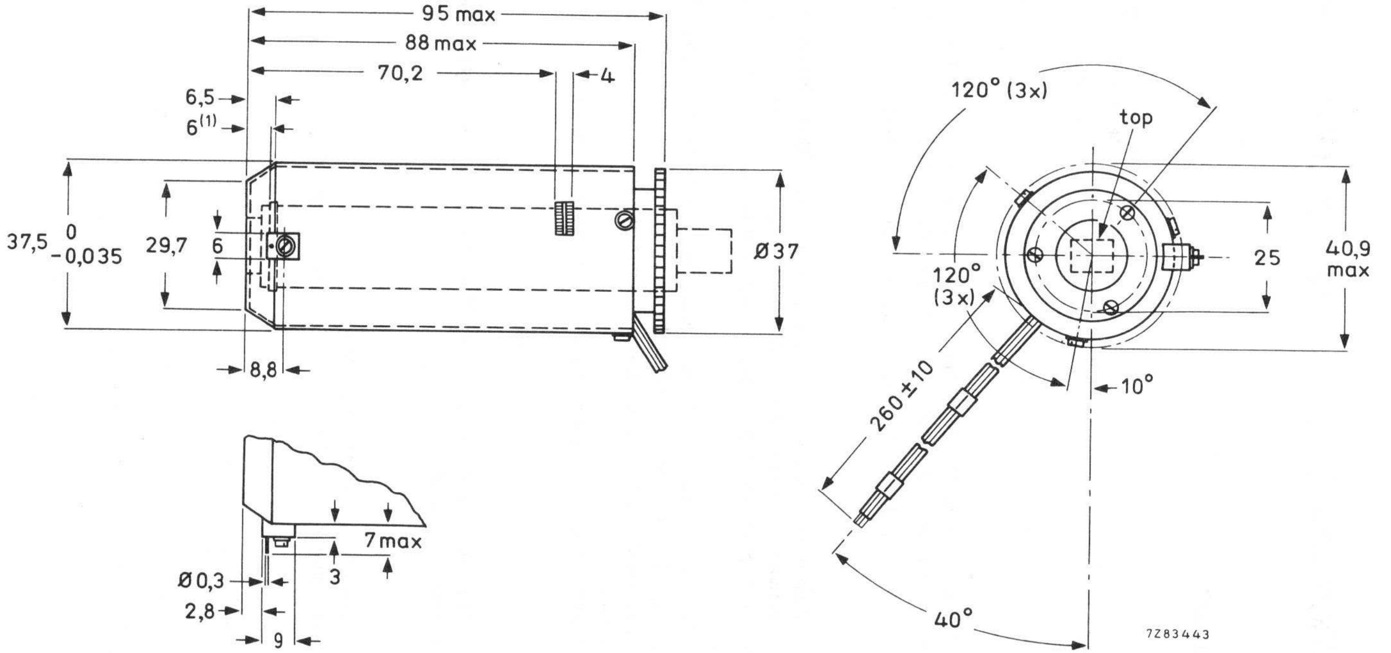

Mass per unit 230 g

Operating body temperature range −15 to + 65 °C

(1) Nominal distance tube target to front unit.

Fig. 1.

ELECTRICAL DATA (typical values)

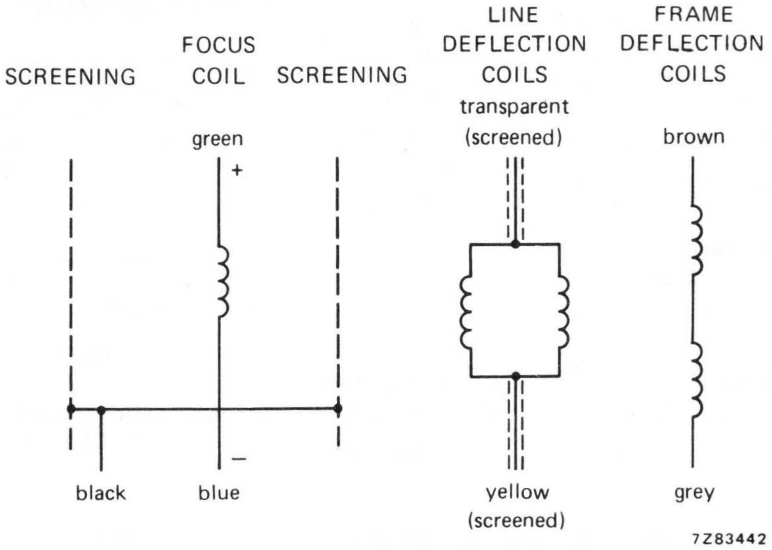

Fig. 2.

coils	inductance mH	resistance Ω	current mA	connections
Line deflection coils	0,91 ± 5%	3,8 ± 10%	260 ± 5% (p-p)	transparent; yellow
Frame deflection coils	2,8 ± 5%	12,7 ± 10%	114 ± 5% (p-p)	brown; grey
Focus coil*		60 ± 10%	120 ± 5%	green; blue

---

* Polarity: the north-seeking pole of a compass should be attracted to the image end of the unit.

Requirements for normal operation (XQ1427; XQ2427)

Tube setting	V_{g2}	=	300	V
	V_{g3}	=	430	V
	$V_{g4}{}^{*}$	=	750	V
	V_{target}	=	45	V
signal current	I_s	=	150	nA
beam current	I_b	=	300	nA

with respect to cathode potential

Alignment magnet field intensity	max.	0,24	mT
	min.	0,015	mT

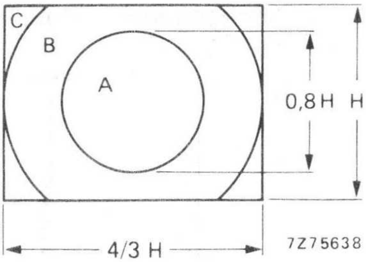

Fig. 3.

Nominal scanning area: 6,6 mm x 8,8 mm
(H = 6,6 mm)

Geometric distortion

Ambient temperature 21 °C.

Measured at operating temperature.

Distortion		
inside circle diam. H	max.	0,5% of picture height
outside circle diam. H	max.	1% of picture height
Skew error	max.	1% of picture height

Registration

The misregistration in any triplet (measured after skew correction) is not greater than:

30 ns in zone A
60 ns in zone B
120 ns in zone C

The errors are measured both in horizontal and vertical direction and are expressed in units of 1/52000 of an active scan duration which is equivalent (horizontally) to 1 ns for CCIR corresponding to approximately 0,00256% (25 x 10^{-6}) related to picture height.

Capacitance of tube target (XQ1427; XQ2427)

The capacitance between the target and the electrodes increases less than 3 pF when the tube is inserted into the deflection unit.

---

* V_{g4} to be adjusted for minimum beam landing error to compensate for tube tolerances.

DEFLECTION UNITS FOR 2/3-INCH PLUMBICON TUBE

with low output capacitance

QUICK REFERENCE DATA

	inductance	resistance
Line deflection coils	0,91 mH	3,8 Ω
Frame deflection coils	2,8 mH	12,7 Ω
Focus coil		60 Ω

APPLICATION

The AT1109/10 is a triplet of rear-loaded deflection units for use in colour television cameras using 2/3 inch pick-up tubes e.g. Plumbicon® tubes, type XQ3427, with low output capacitance (LOC).

Their small dimensions and low weight make them specially suitable for use in portable ENG cameras.

DESCRIPTION

The deflection units contain the deflection and focus coils and are provided with permanent magnet alignment rings. The effective alignment field intensities and directions can be adjusted, the minimum field strength position is indicated. The focus coil is situated inside the deflection coils, hence the focus power is reduced.

The housing consists of a mu-metal can for optimum screening from external magnetic fields and to form the required magnetic circuit for the deflection fields.

The camera tubes are secured in position by an aluminium nut-ring at the rear of the units and by means of a nylon glass tube.

The first stage of the video preamplifier is built in the yoke.

Warning

No deformation of the calibrated mu-metal housing is allowed as this will strongly influence the performance and adjustments of the units.

Catalogue number

The catalogue number of the triplet is 3122 137 18730.

The catalogue number of a single unit, AT1109/10S, 3122 137 18720.

® Registered trade mark for television camera tubes.

MECHANICAL DATA

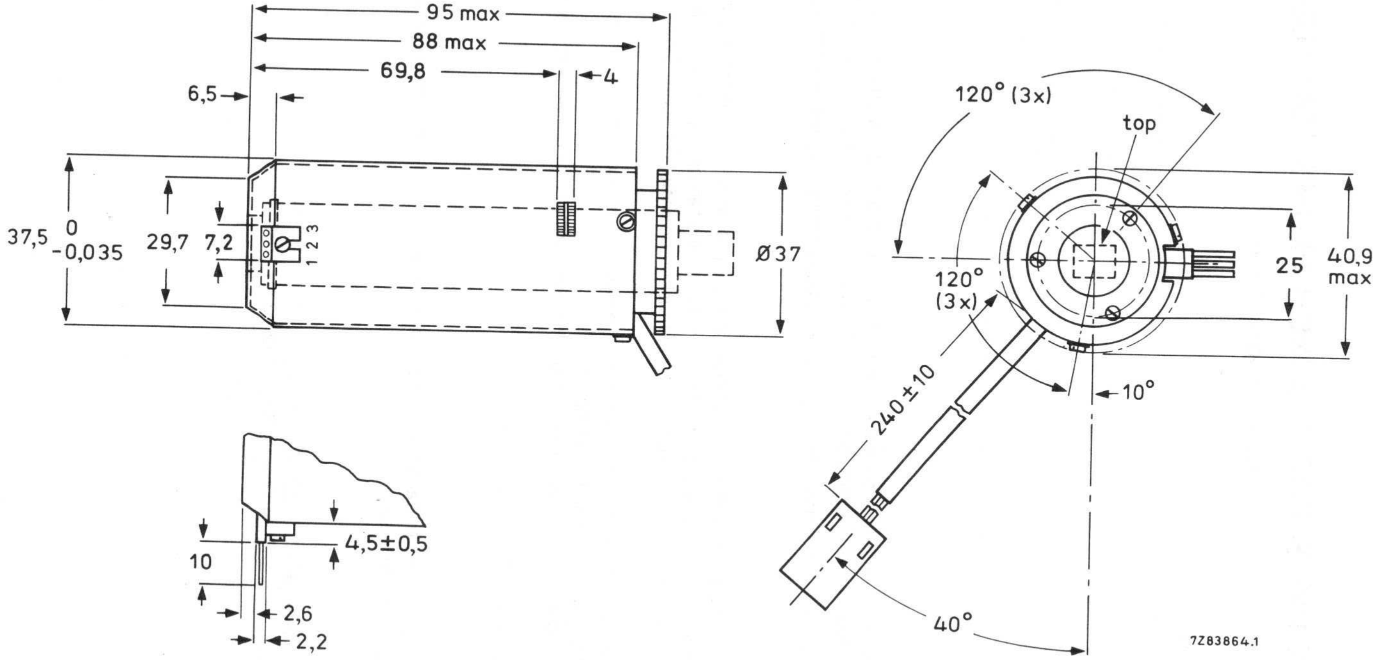

Fig. 1.

Mass per unit 230 g

Operating body temperature range −15 to +65 °C

ELECTRICAL DATA (typical values)

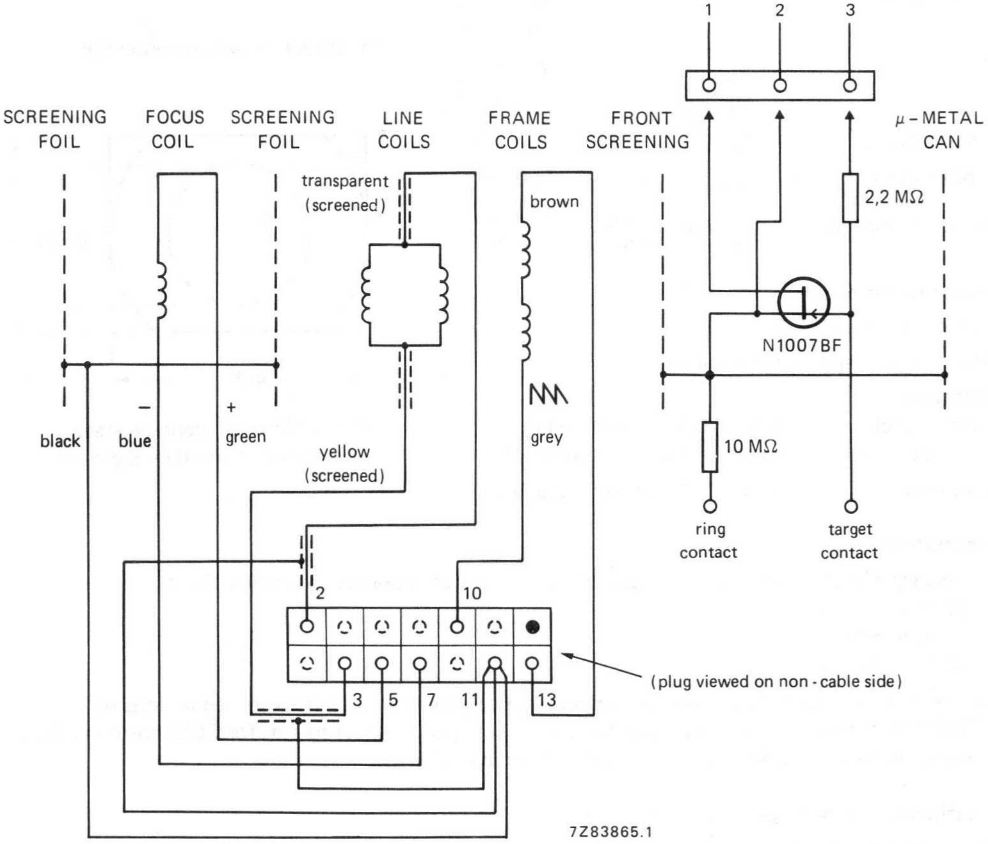

Fig. 2.

coils	inductance mH	resistance Ω	current mA	connections
Line deflection coils	0,91 ± 5%	3,8 ± 10%	230 ± 5% (p-p)	transparent; yellow
Frame deflection coils	2,8 ± 5%	12,7 ± 10%	104 ± 5% (p-p)	brown; grey
Focus coil*		60 ± 10%	115 ± 5%	green; blue

---

* Polarity: the north-seeking end of a compass should be attracted to the image end of the unit.

Requirements for normal operation (XQ3427).

Tube setting	V_{g2}	=	300 V	with respect to cathode potential
	V_{g3}	=	430 V	
	V_{g4}*	=	750 V	
	V_{target}	=	45 V	
signal current	I_s	=	150 nA	
beam current	I_b	=	300 nA	
Alignment magnet field intensity		max.	0,24 mT	
		min.	0,015 mT	

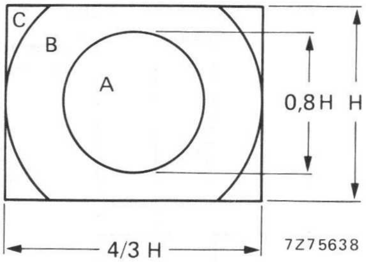

Fig. 3 Nominal scanning area:
6,6 mm x 8,8 mm (H = 6,6 mm).

Geometric distortion

Ambient temperature 21 ^{o}C..

Measured at operating temperature.

Distortion		
inside circle	max.	0,5% of picture height
outside circle	max.	1% of picture height
Skew error	max.	1% of picture height

Registration

The misregistration in any triplet (measured after skew correction) is not greater than:

20 ns in zone A,
40 ns in zone B,
80 ns in zone C.

The errors are measured both in horizontal and vertical direction and are expressed in units of 1/52000 of an active scan duration which is equivalent (horizontally) to 1 ns for CCIR corresponding to approximately 0,00256% (25×10^{-6}) related to picture height.

Capacitance of tube target (XQ3427).

The capacitance between the target and the electrodes increases less than 2 pF when the tube is inserted into the deflection unit.

---

* V_{g4} to be adjusted for minimum beam landing error to compensate for tube tolerances.

DEFLECTION UNITS FOR 2/3-INCH PLUMBICON TUBE

with low output capacitance

QUICK REFERENCE DATA

	inductance	resistance
Line deflection coils	0,91 mH	3,8 Ω
Frame deflection coils	2,8 mH	12,7 Ω
Focus coil	–	60 Ω
Alignment coils	–	300 Ω

APPLICATION

The AT1109/16 is a rear-loaded deflection unit for use in colour television cameras using 2/3 inch pick-up tubes e.g. Plumbicon® tubes, type XQ3427, with low output capacitance (LOC).

The small dimensions and low weight make them specially suitable for use in portable ENG cameras.

DESCRIPTION

The deflection units contain the deflection and focus coils and are provided with alignment coils. The effective alignment field intensities and directions can be adjusted. The focus coil is situated inside the deflection coils, hence the focus power is reduced.

The housing consists of a mu-metal can for optimum screening from external magnetic fields and to form the required magnetic circuit for the deflection fields.

The camera tubes are secured in position by an aluminium nut-ring at the rear of the units and by means of a nylon glass tube.

The first stage of the video preamplifier is built in the yoke.

Warning

No deformation of the calibrated mu-metal housing is allowed as this will strongly influence the performance and adjustments of the units.

Catalogue number

The catalogue number 3322 154 60000 for single unit AT1109/16S.
The catalogue number 3322 154 60600 for selected triplet AT1109/16T.

® Registered trade mark for television camera tube.

MECHANICAL DATA

Dimensions in mm

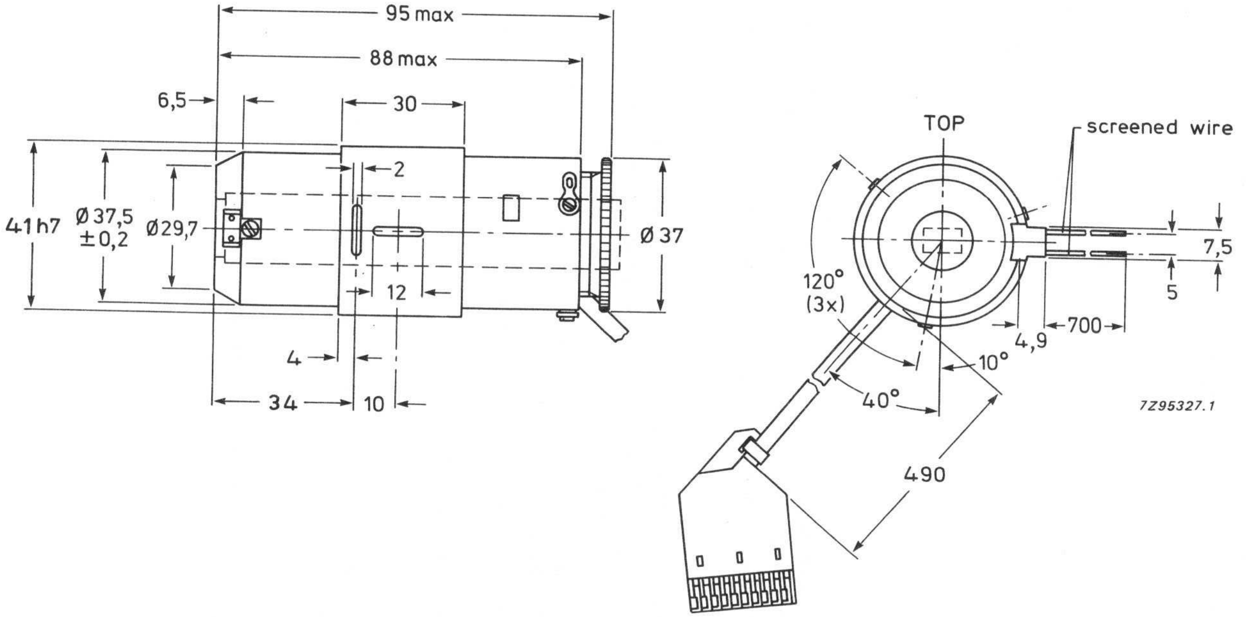

for detail of plug see Fig. 2.

Mass per unit 260 g

Operating body temperature range −15 to + 65 °C

Fig. 1.

ELECTRICAL DATA (typical values)

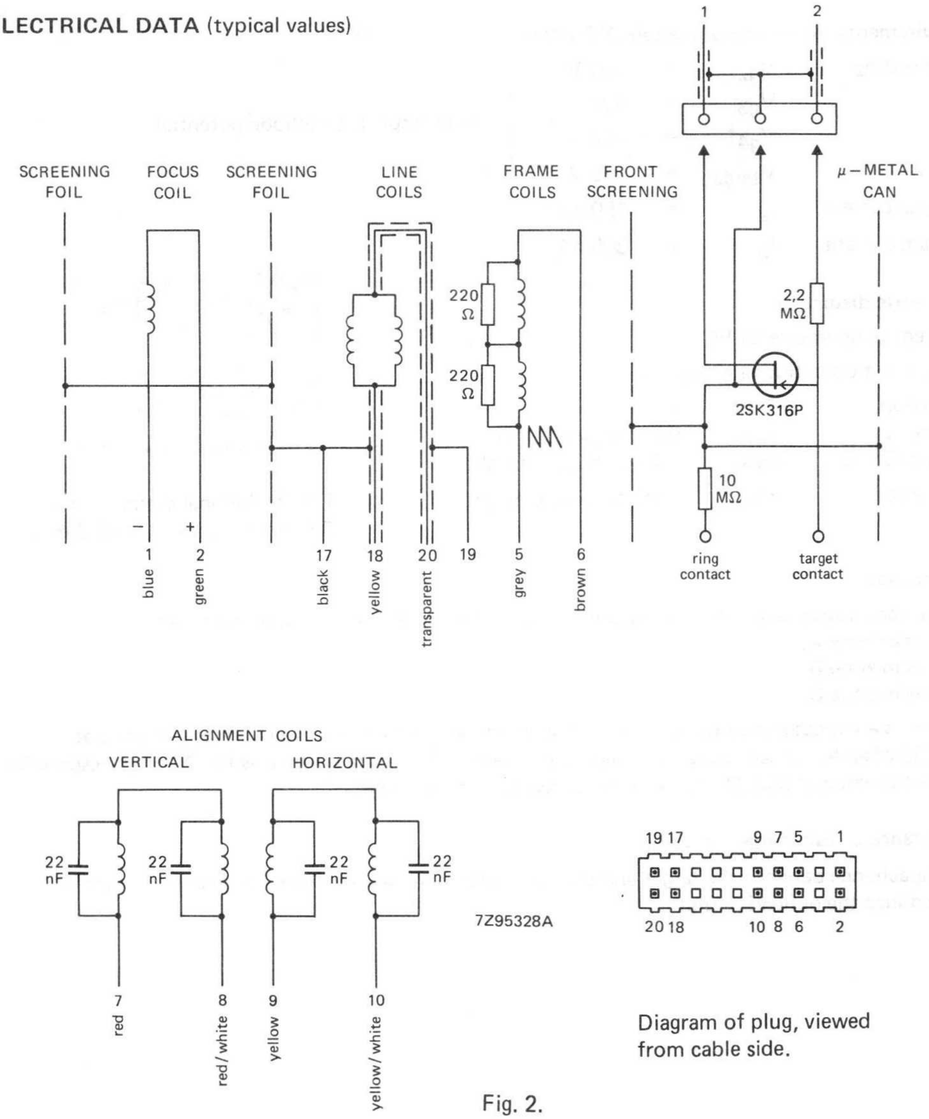

Diagram of plug, viewed from cable side.

Fig. 2.

coils	inductance mH	resistance Ω	current mA	connections
Line deflection coils	0,91 ± 5%	3,8 ± 10%	230 ± 5% (p-p)	transparent; yellow
Frame deflection coils	2,8 ± 5%	12,7 ± 10%	104 ± 5% (p-p)	brown; grey
Focus coil*		60 ± 10%	115 ± 5%	green; blue
Alignment coils vertical horizontal		300 ± 10%	8,4 (for 0,2 mT)	red; red/white yellow; yellow/white

* Polarity: the north-seeking end of a compass should be attracted to the image end of the unit.

Requirements for normal operation (XQ3427).

Tube setting V_{g2} = 300 V
V_{g3} = 430 V
$V_{g4}{}^*$ = 750 V
V_{target} = 45 V
with respect to cathode potential

signal current I_s = 150 nA
beam current I_b = 300 nA

Geometric distortion

Ambient temperature 21 °C.

Measured at operating temperature.

Distortion		
zone A	max.	0,5% of picture height
zones B + C	max.	1% of picture height
Skew error	max.	1% of picture height

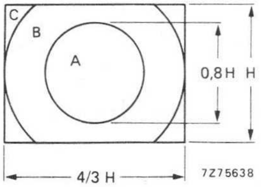

Fig. 3 Nominal scanning area:
6,6 mm x 8,8 mm (H = 6,6 mm).

Registration

The misregistration in any triplet (measured after skew correction) is not greater than:
30 ns in zone A,
60 ns in zone B,
120 ns in zone C.

The errors are measured both in horizontal and vertical direction and are expressed in units of 1/52000 of an active scan duration which is equivalent (horizontally) to 1 ns for CCIR corresponding to approximately 0,00256% (25×10^{-6}) related to picture height.

Capacitance of tube target (XQ3427).

The capacitance between the target and the electrodes increases less than 2 pF when the tube is inserted into the deflection unit.

---

* V_{g4} to be adjusted for minimum beam landing error to compensate for tube tolerances.

DEFLECTION UNITS FOR 1-INCH PLUMBICON TUBE

computer-selected triplet

QUICK REFERENCE DATA

	inductance	resistance
Line deflection coils	0,79 mH	2,2 Ω
Frame deflection coils	28 mH	62 Ω
Focus coil		140 Ω

APPLICATION

The AT1116/06 is a triplet of front loaded deflection units for use in broadcast colour television cameras using 1-inch camera tubes, e.g. Plumbicon® tubes of the XQ1070/03 and XQ2070/03 series.

DESCRIPTION

The deflection units contain the deflection, alignment and focus coils.
The camera tubes are secured in position by a plastic nut-ring at the rear of a unit. By turning the ring the tube will be pushed backward until it touches the stop.

Catalogue number

The catalogue number of the triplet is 3122 137 15040.
The catalogue number of a single unit, AT1116S, is 3122 137 15050.

® Registered trade mark for television camera tubes.

MECHANICAL DATA

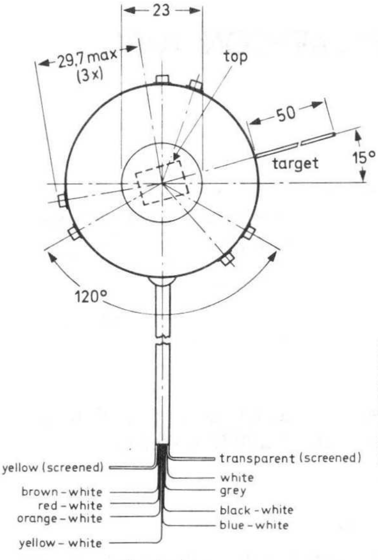

front view

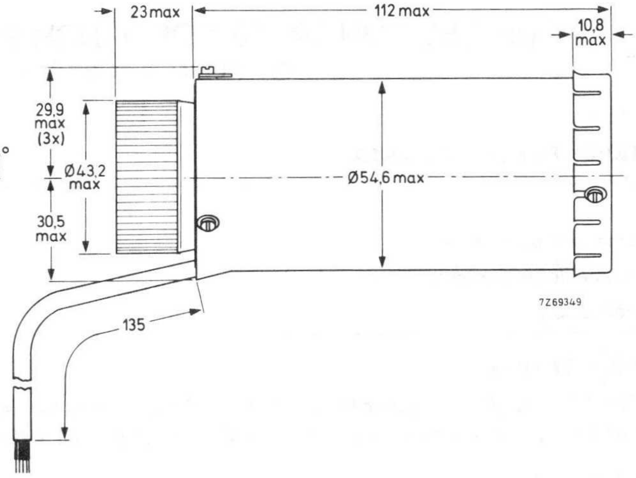

Mass per unit 615 g approx.

Body temperature

Temperature range	
for continuous operation	−15 to + 75 °C
for non-operating	−25 to + 85 °C

ELECTRICAL DATA (typical values)

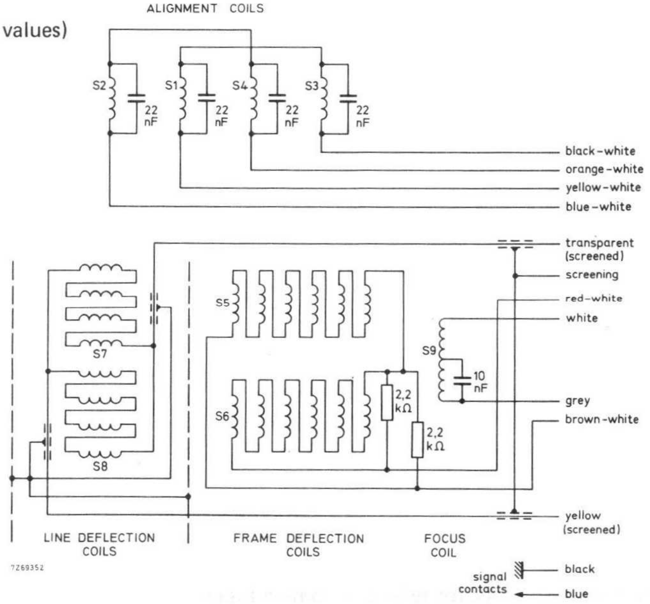

coils	inductance mH	resistance Ω	connections
Line deflection coils	0,79 ± 5%	2,2 ± 10%	transparent (screened); yellow (screened)
Frame deflection coils	28 ± 5%	62 ± 10%	red-white; brown-white
Horizontal alignment coils		550 ± 10%	yellow-white; black-white
Vertical alignment coils		550 ± 10%	orange-white; blue-white
Focus coil*		140 ± 10%	grey (+); white (–)

Required currents for normal operation (XQ1070)

Tube setting:

$\left.\begin{array}{l} V_{g3} = +600\ \text{V} \\ V_{g4} = +960\ \text{V} \end{array}\right\}$ with respect to cathode potential

Nominal scanning area: 9,6 mm x 12,8 mm

Line deflection current, p-p	280 mA
Frame deflection current, p-p	34 mA
Focus current	108 mA
Alignment current	1 mA will cause a shift of 0,6% of picture height

---

* Polarity: the north-seeking pole of a compass should be attracted to the image end of the unit.

Geometric distortion

Distortion

inside the circle	max. 0,5% of picture height
outside the circle	max. 1% of picture height

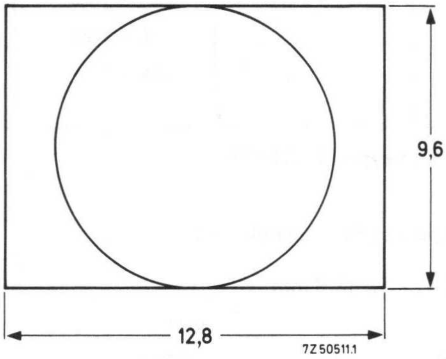

Registration

The deflection units are supplied in matched sets of three units wherein the misregistration in any set is not greater than:

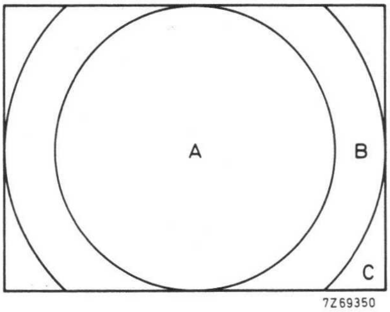

in zone A	25 ns
in zone B	40 ns
in zone C	80 ns

The errors are measured horizontally and vertically.

DEFLECTION UNITS

FOR ½-INCH H.S. 'DIODE-GUN' PLUMBICON TUBE

computer selected triplet

QUICK REFERENCE DATA

	inductance	resistance
Line deflection coils	325 μH	6,2 Ω
Frame deflection coils	1,1 mH	14,1 Ω

APPLICATION

The AT1120T is a computer selected triplet of deflection units for use in colour television cameras using front-loading ½-inch H.S. diode electron gun Plumbicon® tubes with magnetic deflection and electrostatic focus, type XQ4087.

Their small size and low weight make these units specially suitable for use in portable ENG cameras.

DESCRIPTION

The deflection unit contains the horizontal and vertical deflection coils. With the H.S. diode gun Plumbicon tubes no alignment correction is required. The tube socket is integrated in the unit, all tube connections form part of the deflection unit assembly. The housing is a mu-metal can for optimum screening from external magnetic fields and forms the required magnetic circuit for the deflection fields.

WARNING

No deformation of the mu-metal housing is allowed as this would strongly affect the performance and adjustment of the unit.

CATALOGUE NUMBER

Triplet	AT1120T:	3122 137 18860
Single unit	AT1120S:	3122 137 18870

® Registered trade mark for television camera tubes.

ELECTRICAL DATA (Deflection coil + tube connections)

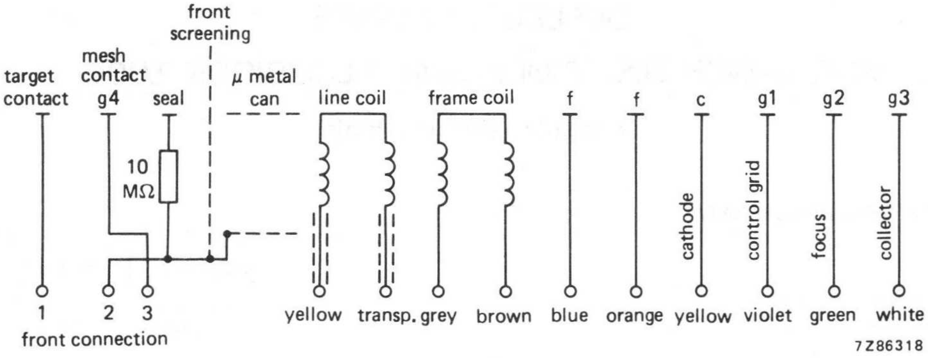

Fig. 1.

Horizontal deflection coil	inductance 325 μH ± 5%, resistance 6,2 Ω ± 10%.
Vertical deflection coil	inductance 1,1 mH ± 5%, resistance 14,1 Ω ± 10%.

Measured with bridge f = 1000 Hz, T_{amb} = 25 °C:

Deflection current:

Horizontal deflection coil	190 ± 5%	mA
Vertical deflection coil	92 ± 5%	mA

Distortion:

geometric	⩽ 1% of picture height
skew	⩽ 1% of picture height

Registration

The deflection units are supplied in matched sets of three units. The misregistration in any set is not greater than:

40 ns in zone A
80 ns in zone B
120 ns in zone C

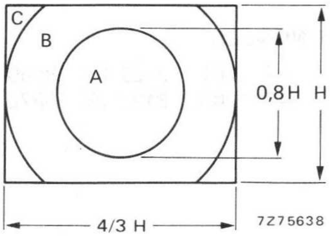

Fig. 2

Nominal scanning area: 4,8 mm x 6,4 mm (H = 4,8 mm).

The errors are measured both in horizontal and vertical direction after skew correction, with one tube as a reference. Tube settings according to the XQ4087 data sheet.

Capacitance

Target contact of the tube/coil assembly to any other contact $C_{as} \approx 3,5$ pF.

MECHANICAL DATA

Dimensions in mm

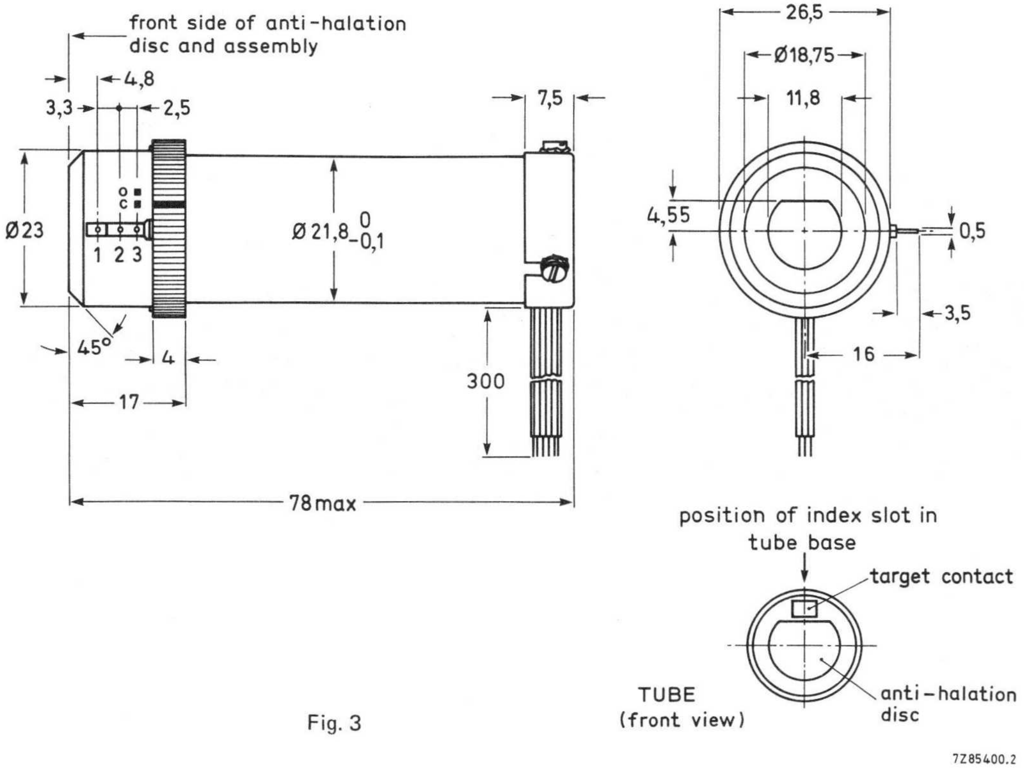

Fig. 3

Mass per unit : 53 g

Operating body temperature range : −15 to + 70 °C

To replace a tube unscrew the ring at the front end of the deflection unit by turning the marker on the ring to position "0".

Remove the metal front part and push gently on the base of the tube through the hole in the rear end of the unit.

For proper insertion of a tube the index slot in the tube base should be in the position indicated by the arrow on the front end of the deflection unit. The deflection units should be mounted in the camera with the tube target contact positioned upwards.

DEFLECTION UNITS FOR 1-INCH PLUMBICON® TUBES

with low output capacitance

QUICK REFERENCE DATA

	inductance	resistance
Line deflection coils	0,800 mH	2,2 Ω
Field deflection coils	4,4 mH	10 Ω
Focus coil		1300 Ω

APPLICATION

The AT1126/03 is a triplet of rear-loaded deflection units for use in colour television cameras using 1 inch pick-up tubes e.g. Plumbicon® tubes, types XQ1500 and XQ3070, with low output capacitance (LOC).

DESCRIPTION

The deflection units contain the deflection, focus and alignment coils.
The housing is a mu-metal can for optimum screening from external magnetic fields and to form the required magnetic circuit for the deflection fields.
The camera tubes are secured in position by a threaded ring at the rear of the units.
The first stage of the video preamplifier is built into the yoke.

Warning

The mu-metal housing must not be deformed as this will strongly influence the performance and adjustments of the units.

Catalogue number

Triplet AT1126/03T: 3322 154 61000;
Single unit AT1126/03S: 3322 154 60800.

® Registered trade mark for television camera tubes.

MECHANICAL DATA

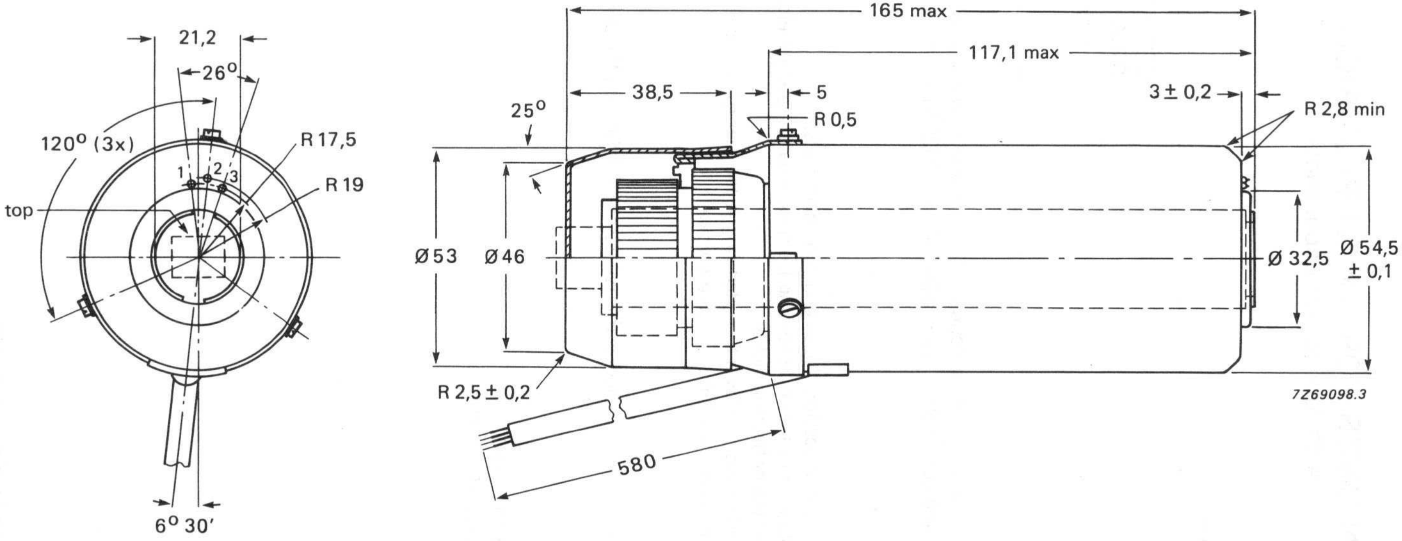

Mass per unit 700 g

Operating body temperature range −15 to + 65 °C

Fig. 1.

ELECTRICAL DATA (typical values)

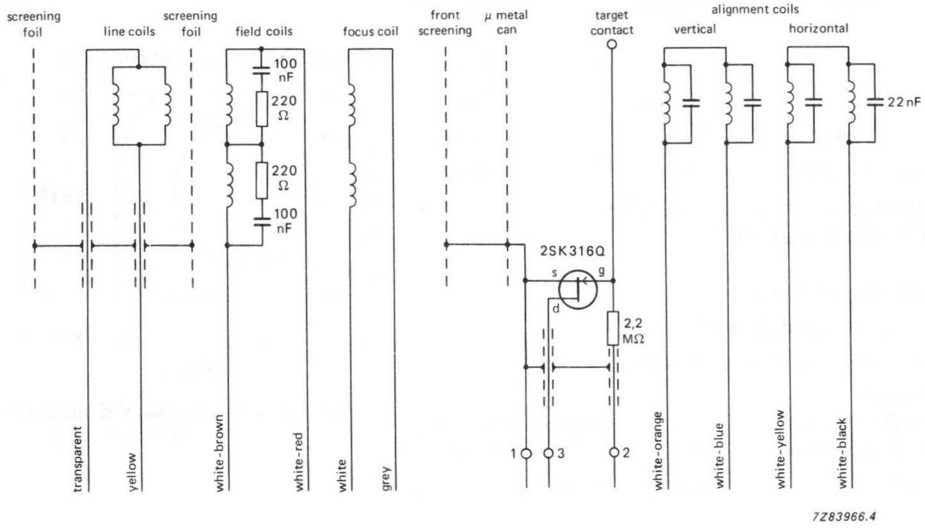

Fig. 2.

coils (see Fig. 2)	inductance mH	resistance Ω	current mA
Line deflection coils	0,800 ± 5%	2,2 ± 10%	230 ± 5% (p-p)
Field deflection coils	4,4 ± 5%	10 ± 10%	80 ± 5% (p-p)
Focus coil*		1300 ± 10%	30 ± 5%
Alignment coils		530 ± 10%	

---

* Polarity: the image end of the unit should attract the north seeking pole of a compass.

Requirements for normal operation (XQ1500)

Tube setting $V_{g2,g4}$ = 300 V
V_{g5} = 475 V
V_{g6}* = 750 V
V_{target} = 45 V
with respect to cathode potential

signal current I_s = 200 nA
beam current I_b = 400 nA

Alignment current of 1 mA will cause a shift of ⩽ 0,7% of picture height.

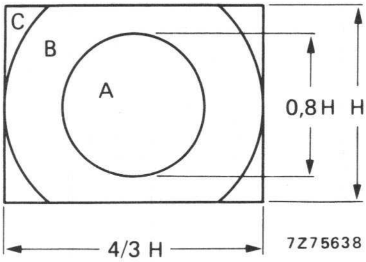

Fig. 3.

Nominal scanning area: 9,6 mm x 12,8 mm
(H = 9,6 mm)

Geometric distortion

Ambient temperature 21 °C.

Measured at operating temperature.

Distortion		
inside zone A	max.	0,5% of picture height
outside zone A	max.	1% of picture height
Skew error	max.	0,5% of picture height

Registration

The misregistration in any triplet (measured after skew correction) is not greater than:

40 ns in zone A
50 ns in zone B
80 ns in zone C

The errors are measured both in horizontal and vertical direction and are expressed in units of 1/52000 of an active scan duration which is equivalent (horizontally) to 1 ns for CCIR corresponding to approximately 0,00256% (25×10^{-6}) related to picture height.

Capacitance of tube target

The capacitance between the target and the electrodes increases less than 3,5 pF, when the tube is inserted into the deflection unit, and measured without FET-preamplifier.

---

* V_{g6} to be adjusted for minimum beam landing error to compensate for tube tolerances.

DEFLECTION UNITS FOR 30 mm PLUMBICON ® TUBE

QUICK REFERENCE DATA

	inductance	resistance
Line deflection coils	0,835 mH	2,1 Ω
Field deflection coils	5,5 mH	14,5 Ω
Focus coil		1125 Ω

APPLICATION

The AT1130/02 is a triplet of rear-loaded deflection units for use in colour television cameras using 30 mm pick-up tubes e.g. Plumbicon® tubes, types XQ1410, XQ1520.

DESCRIPTION

The deflection units contain the deflection, focus and alignment coils.
The housing is a mu-metal can for optimum screening from external magnetic fields and to form the required magnetic circuit for the deflection fields.
The camera tubes are secured in position by a threaded ring at the rear of the units.
The first stage of the video preamplifier is built into the yoke.

Warning

The mu-metal housing must not be deformed as this will strongly influence the performance and adjustments of the units.

Catalogue number

Triplet AT1130/02:	3122 137 18880
Single unit AT1130/02S:	3122 137 18890

® Registered trade mark for television camera tubes.

MECHANICAL DATA

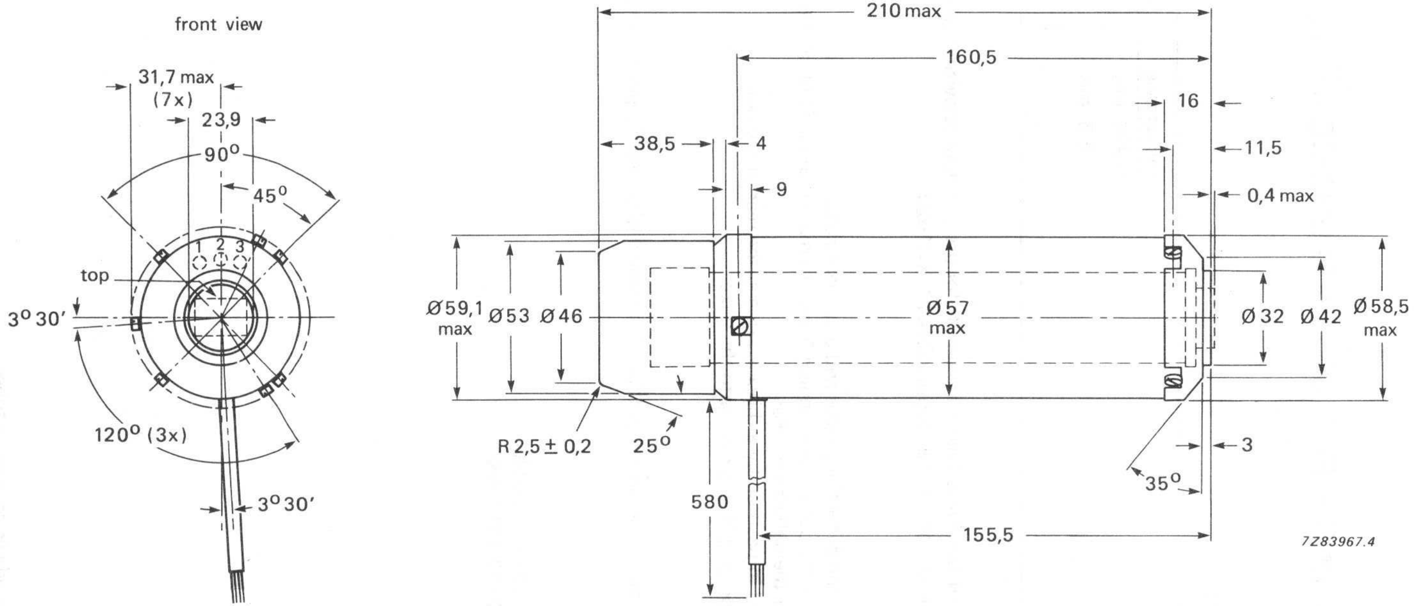

Fig. 1.

Mass per unit approx. 1000 g

Operating body temperature range −15 to + 65 °C

ELECTRICAL DATA (typical values)

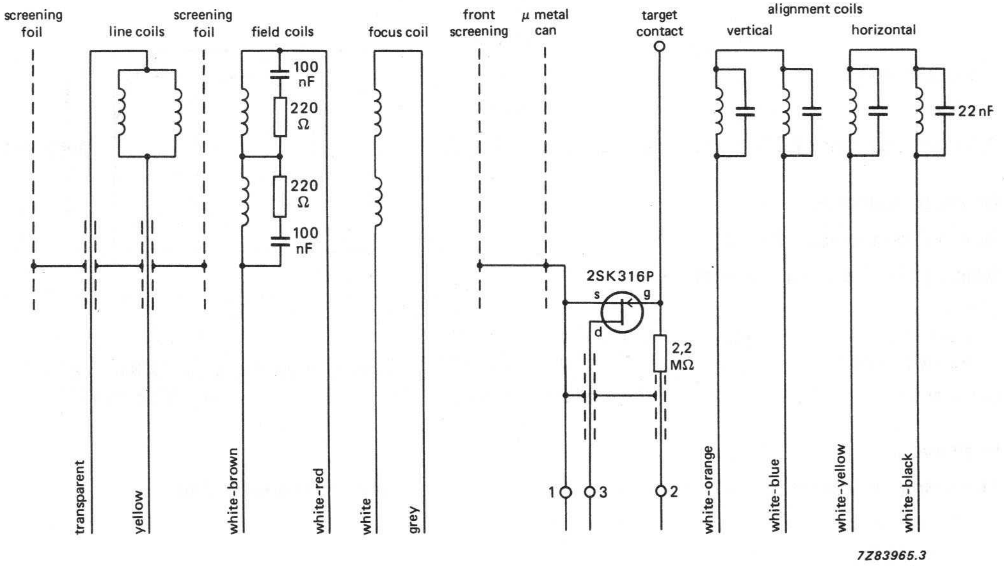

Fig. 2.

coils (see Fig. 2)	inductance mH	resistance Ω	current mA
Line deflection coils	0,835 ± 5%	2,1 ± 10%	180 ± 5% (p-p)
Field deflection coils	5,5 ± 5%	14,5 ± 10%	55 ± 5% (p-p)
Focus coil*		1125 ± 10%	35 ± 5%
Alignment coils		530 ± 10%	

---

* Polarity: the image end of the unit should repel the north seeking pole of a compass.

Requirements for normal operation (XQ1410)

Tube setting	V_{g2}	=	300 V	with respect to cathode potential
	V_{g3}	=	600 V	
	V_{g4}*	=	675 V	
	V_{target}	=	45 V	
signal current	I_s	=	300 nA	
beam current	I_b	=	600 nA	

Alignment current of 8,8 mA will cause a flux of 0,2 mT.

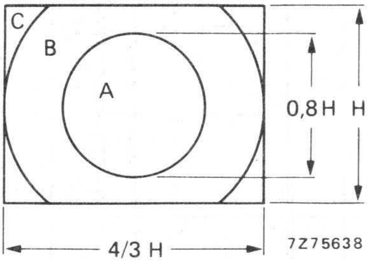

Fig. 3.

Nominal scanning area: 12,8 mm x 17,1 mm (H = 12,8 mm)

Geometric distortion

Ambient temperature 21 °C.

Measured at operating temperature.

Distortion		
inside zone A	max.	0,5% of picture height
outside zone A	max.	1% of picture height
Skew error	max.	0,5% of picture height

Registration

The misregistration in any triplet (measured after skew correction) is not greater than:

40 ns in zone A
50 ns in zone B
80 ns in zone C

The errors are measured both in horizontal and vertical direction and are expressed in units of 1/52000 of an active scan duration which is equivalent (horizontally) to 1 ns for CCIR corresponding to approximately 0,00256% (25×10^{-6}) related to picture height.

Capacitance of tube target (XQ1410, XQ1520)

The capacitance between the target and the electrodes increases less than 5,5 pF when the tube is inserted into the deflection unit.

---

* V_{g4} to be adjusted for minimum beam landing error to compensate for tube tolerances.

FOCUSING UNIT FOR 2/3 INCH PLUMBICON TUBES

with M.S. Diode gun

QUICK REFERENCE DATA

Focus coil resistance	25,2 Ω
Alignment coils resistance	567 Ω

APPLICATION

The KV4722 is a focusing and alignment unit for 2/3 inch "diode" electron gun Plumbicon® tubes with magnetic focus and electrostatic deflection (M.S.), type XQ3457.

DESCRIPTION

The unit contains the focus coil and the horizontal and vertical alignment coils. The housing is a mu-metal can for optimum screening from external magnetic fields.

Warning

No deformation of the mu-metal housing is allowed as this would strongly affect the performance of the unit.

Catalogue number

Single unit KV4722: 9390 304 60000;
For a 3-tube colour camera 3 single units must be ordered.

® Registered trade mark for television camera tubes.

MECHANICAL DATA

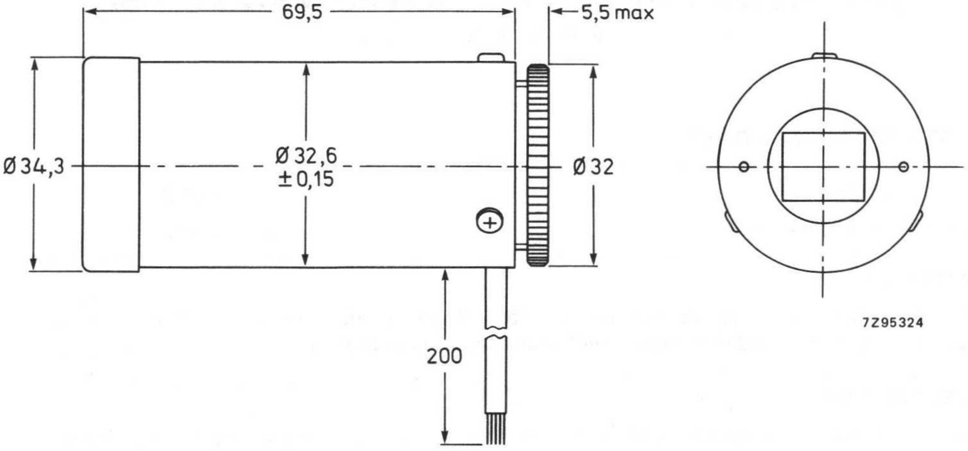

7Z95324

ELECTRICAL DATA

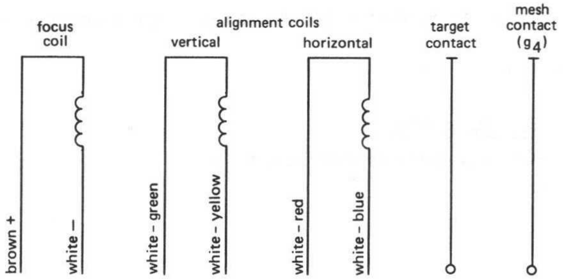

7Z97058

coils (see Fig. 2)	resistance Ω	current mA	field mT
focus coil	25,2 ± 10%	198 ± 10%	7 ± 10%
alignment coils	567 ± 10%	17,5 ± 10%	0,4 ± 10%

Tube settings according to XQ3457 tube data.

DEFLECTION UNIT FOR 2/3 INCH PLUMBICON TUBES

with H.S. "Diode" gun, computer selected triplet

QUICK REFERENCE DATA

	inductance	resistance
Line deflection coils	1,15 mH	4,5 Ω
Frame deflection coils	2,41 mH	15,4 Ω

APPLICATION

The KV4736-9 is a computer selected triplet of deflection units for use in colour television cameras using front-loading 2/3 inch H.S. "diode" electron gun Plumbicon® tubes with magnetic deflection and electrostatic focus, type XQ4187. Their small size and low weight make these units specially suitable for use in portable ENG cameras.

DESCRIPTION

The deflection unit contains the horizontal and vertical deflection coils and a pre-focus coil. With the H.S. "diode" electron gun Plumbicon tubes no alignment correction is required. The tube socket is integrated in the unit, all tube connections form part of the deflection unit assembly. The housing is a mu-metal can for optimum screening from external magnetic fields and forms the required magnetic circuit for the deflection fields.

Warning

No deformation of the mu-metal housing is allowed as this would strongly affect the performance and adjustment of the unit.

Catalogue number

Triplet KV4736-9-AT : 9390 309 50000 (without sleeve)
Triplet KV4736-9-CT : 9390 309 00000 (with sleeve)

® Registered trade mark for television camera tubes.

MECHANICAL DATA

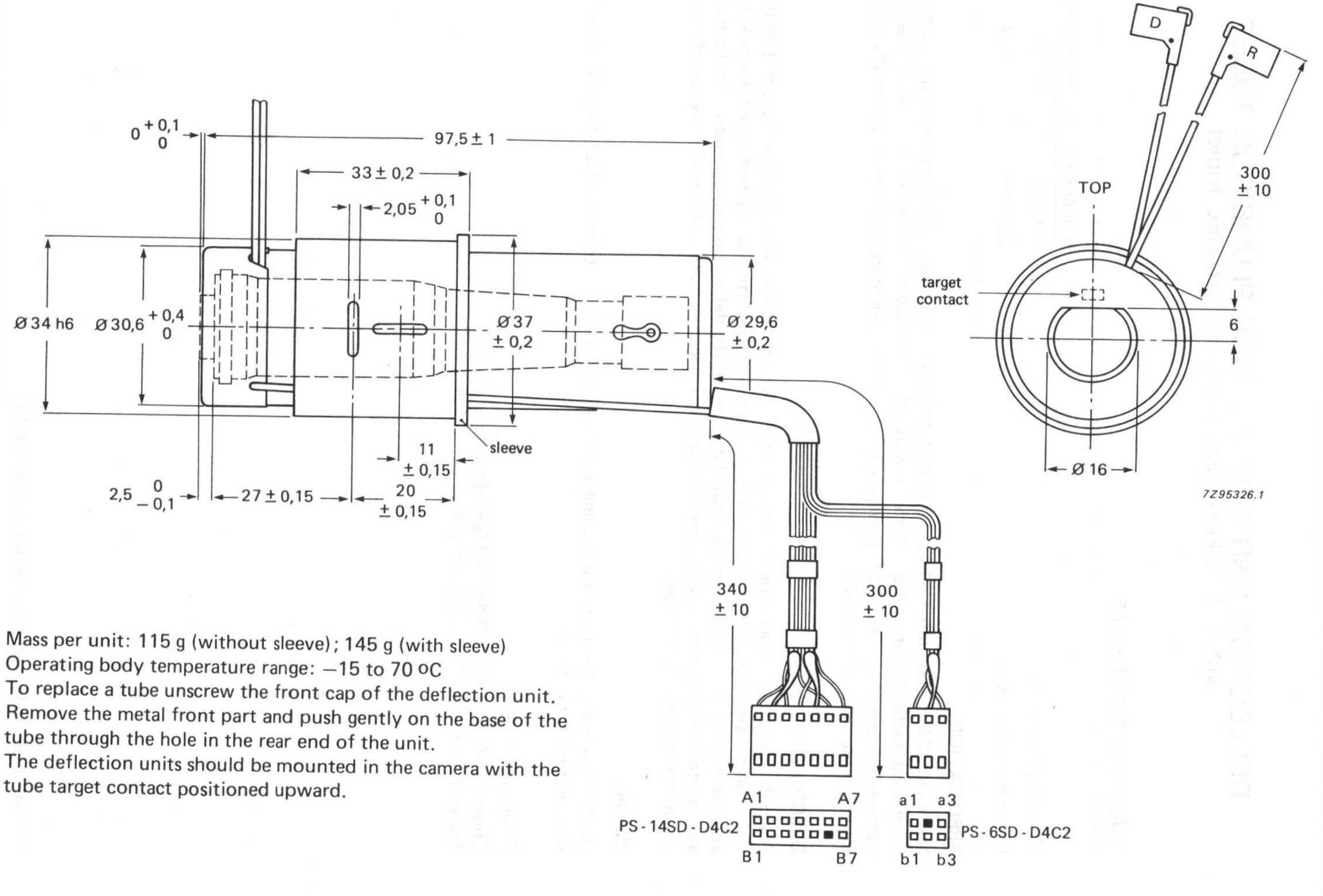

Mass per unit: 115 g (without sleeve); 145 g (with sleeve)
Operating body temperature range: −15 to 70 oC
To replace a tube unscrew the front cap of the deflection unit.
Remove the metal front part and push gently on the base of the tube through the hole in the rear end of the unit.
The deflection units should be mounted in the camera with the tube target contact positioned upward.

ELECTRICAL DATA

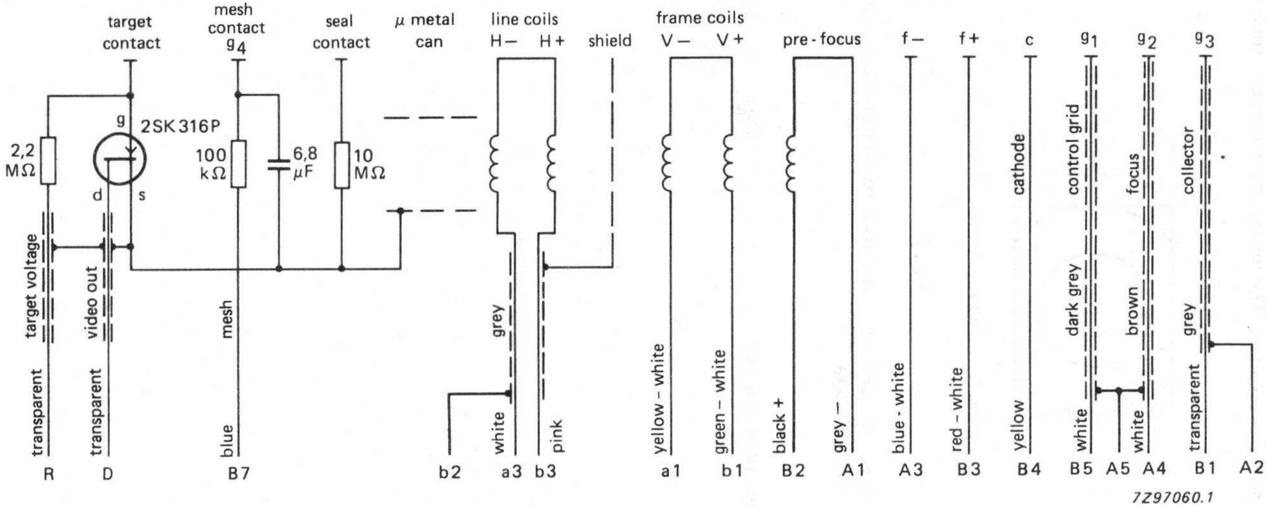

Fig. 1.

coils	inductance mH	resistance Ω	current mA
horizontal deflection	1,15 ± 5%	4,5 ± 5%	185 ± 5% (p-p)
vertical deflection	2,41 ± 5%	15,4 ± 5%	95 ± 5% (p-p)
pre-focus	–	99 ± 5%	20 ± 5%

Measured with bridge f = 1000 Hz, T_{amb} = 25 °C

Distortion	
geometric	⩽ 1% of picture height
skew	⩽ 1% of picture height

ELECTRICAL DATA (continued)

Registration

The deflection units are supplied in matched sets of three units. The misregistration in any set is not greater than:

40 ns in zone A
80 ns in zone B
120 ns in zone C

Nominal scanning area:

6,6 mm x 8,8 mm (H = 6,6 mm).

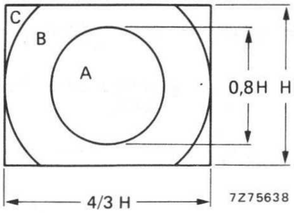

Fig. 2.

The errors are measured both in horizontal and vertical direction after skew correction, with one tube as a reference. Tube settings according to the XQ4187 data.

Capacitance

Target contact of the tube/coil assembly to any other contact	C_{as}	$\approx$	3,5 pF

DEFLECTION UNIT FOR 2/3 INCH PLUMBICON TUBES

with electrostatic focus

QUICK REFERENCE DATA

	inductance	resistance
Line deflection coils	1,17 mH	5,03 Ω
Frame deflection coils	5,3 mH	33 Ω
Alignment coils		146 Ω

APPLICATION

The KV4780 is a deflection unit for 2/3 inch Plumbicon® tubes with magnetic deflection and electrostatic focus, type XQ3467.

DESCRIPTION

The deflection unit contains the horizontal and vertical deflection coils and the alignment coils. The housing is a mu-metal can for optimum screening from external magnetic fields.

Warning

No deformation of the mu-metal housing is allowed as this would strongly affect the performance and adjustment of the unit.

Catalogue number

Single unit KV4780: 9390 304 70000

For a 3-tube colour camera 3 single units must be ordered.

® Registered trade mark for television camera tubes.

DEVELOPMENT DATA

MECHANICAL DATA

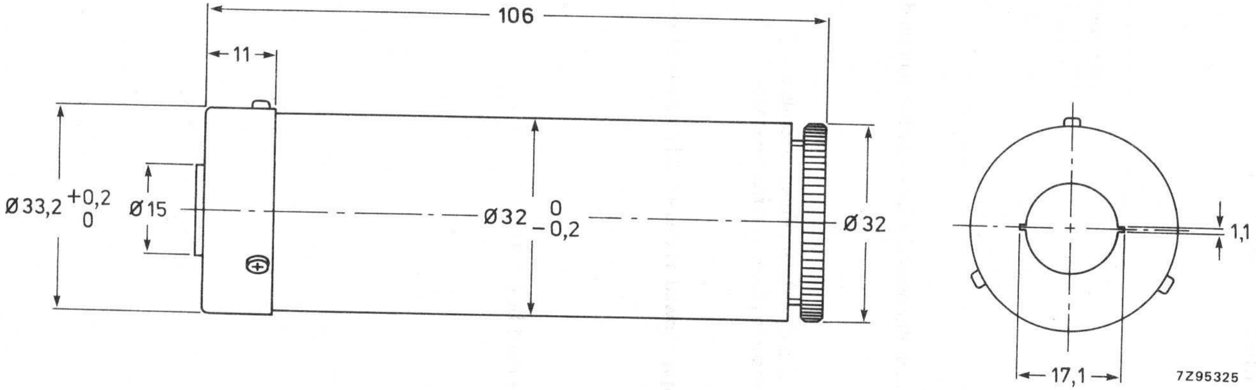

Mass per unit: 110 g

Operating body temperature range: −10 to 60 °C

ELECTRICAL DATA

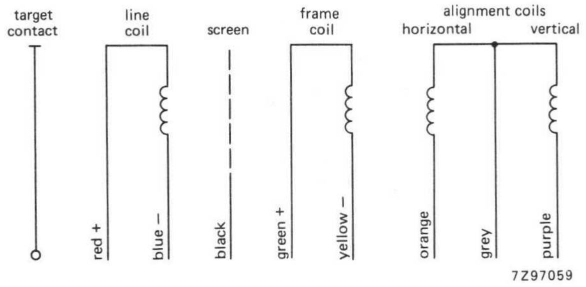

Fig. 2.

coils, see Fig. 2	inductance mH	resistance Ω	current mA	field mT
Horizontal deflection	1,17 ± 10%	5,03 ± 10%	175 ± 10%	
Vertical deflection	5,3 ± 10%	33 ± 10%	30 ± 10%	
Alignment		146 ± 10%	22 ± 10%	0,4 ± 10%

Distortion

geometric	⩽ 1% of picture height
skew	⩽ 1,5% of picture height

Registration

The misregistration in any set of 3 units is not greater than:

40 ns in zone A
80 ns in zone B
120 ns in zone C

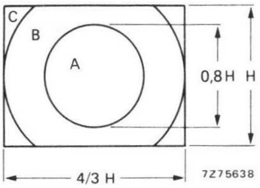

Fig. 2.

Nominal scanning area: 6,6 mm x 8,8 mm (H = 6,6 mm).

The errors are measured both in horizontal and vertical direction after skew correction, with one tube as a reference. Tube settings according to the XQ3467 data.

INDEX OF TYPE NUMBERS

INDEX OF TYPE NUMBERS

For type numbers of Newvicon and Vidicon camera tubes see relevant Data Handbook.

NOTES

NOTES

NOTES

NOTES

NOTES

NOTES

NOTES

NOTES

NOTES

NOTES

The Mullard technical handbook system...
... a comprehensive data library

The Mullard technical handbook is made up of four sets of Books, each comprising several parts:-

Book 1 (light blue)	Semiconductor devices
Book 2 (orange)	Electronic tubes
Book 3 (green)	Components, materials and assemblies
Book 4 (dark blue)	Integrated circuits

Most of the devices for which full data is given in these books are those around which we would recommend equipment to be designed. Where appropriate, other types no longer recommended for new equipment designs but generally available for equipment production, are listed separately. Data sheets for these types may be obtained on request. Older devices for which data may be obtained on request are also included in the index of the appropriate part of each book.

Because the Technical handbook system forms a comprehensive data reference library the current Mullard Quick Reference Guide should always be consulted for details of the Mullard preferred range.

The data contained in these books is as accurate and up to date as possible at the time of going to press. It must be understood, however, that no guarantee can be given on the availability of the various devices, or that their specifications may not be changed before the next edition is published.

Each part is reviewed regularly, and revised and re-issued where necessary. Revisions to previous data are indicated by an arrow in the margin.

Requests for copies of the Quick Reference Guide and individual data sheets (please quote the type number) should be sent to:-

Technical Publications Department, Mullard Limited,
New Road, Mitcham, Surrey CR4 4XY. Telex 22194.

Prices and availability information for Mullard components should be obtained from Mullard House, or from one of the Mullard Distributors listed on the back cover.

The Mullard Data Base

For the equipment designer, technical information on electronic components is vital. Mullard market the widest range of components in the U.K., supported by a comprehensive information service – the Mullard Data Base.

Brief details are given here. For further information and an order form, please write to:-

The Technical Publication Department,
Mullard Limited,
New Road, Mitcham,
Surrey CR4 4XY.

Regular Publications

Mullard Bulletin

A must for designers, this bi-monthly, newspaper-style publication briefly describes new components and offers further information on subjects of interest.

Consumer Electronics

A review, in newspaper style, published every four months. Articles and features of interest to those in the consumer electronics industry, with emphasis on television technology and allied subjects.

Technical Publications, Brochures, Leaflets and Catalogues

Mullard publish hundreds of publications on components and their application.

Make sure your name is on the mailing list for the Mullard Bulletin, which describes and offers new publications.

Prestel too!

Prestel Too!

All Mullard publications can be ordered directly via Prestel.

The Mullard Data Base begins, on page 556201.

Electronic Components and Applications

A quarterly technical journal covering, in depth, developments in electronics based on the work of Philips, Signetics and Mullard laboratories. Please ask for a sample copy and subscription form.

Quick Reference Guide

All products marketed by Mullard are listed alphanumerically and described briefly in our Quick Reference Guide.

Technical Data Service

This service provides detailed, up-to-date information on the characteristics and performance of Mullard components.

Subscribers to any or all of the four handbook sections receive all relevant handbooks, looseleaf binders, monthly mailings of new data sheets, and new handbook parts as they are published.

For those not wishing to subscribe to the Data Service, handbook parts can be purchased individually.

Individual data sheets are available free-of-charge, and can be obtained by quoting the type number.

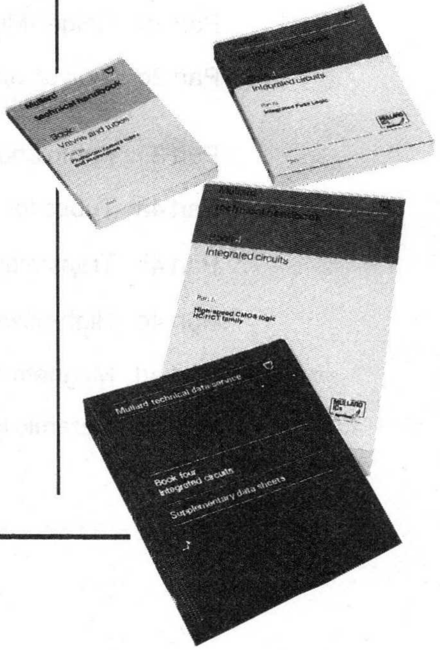

Mullard Data Base: Prestel 556201

Mullard technical handbook

Book 2 Electronic tubes

Book 2 consists of the following parts:

Part 1a	Colour tv, data and graphic display tubes and deflection units
Part 1b	Cathode-ray tubes
Part 1c	Monochrome tubes and deflection units
Part 1d	Wirewound components for tv and monitors
Part 2a	Plumbicon camera tubes and accessories
Part 2b	Geiger-Muller tubes
Part 2c	Vidicon and Newvicon camera tubes and deflection units
Part 3	Photo and electron multipliers
Part 4a	Tubes for r.f. heating
Part 4b	Transmitting tubes for communications
Part 4c	High-power klystrons
Part 4d	Magnetrons for microwave heating
Part 4e	Ceramic tubes for communications

Mullard

technical handbook

Book 2

MULLARD
DISTRIBUTOR
SERVICE

Alrad Instruments Ltd.
Turnpike Road Industrial Estate, Newbury, Berks. RG13 2NS.
Tel: Newbury (0635) 30345. Easylink: 946240 quote: 19005205.

Mullard **Mullard Limited,** Mullard House, Torrington Place,
London WC1E 7HD. Telephone: (01) 580 6633. Telex: 264341.

Mullard manufacture and market electronic components under their own name and those of associated companies.

Printed in The Netherlands (1M/587)
9398 151 50051
Publication No. 807301