AF AMPLIFIER AM-65/GRC SCHEMATIC DIAGRAM

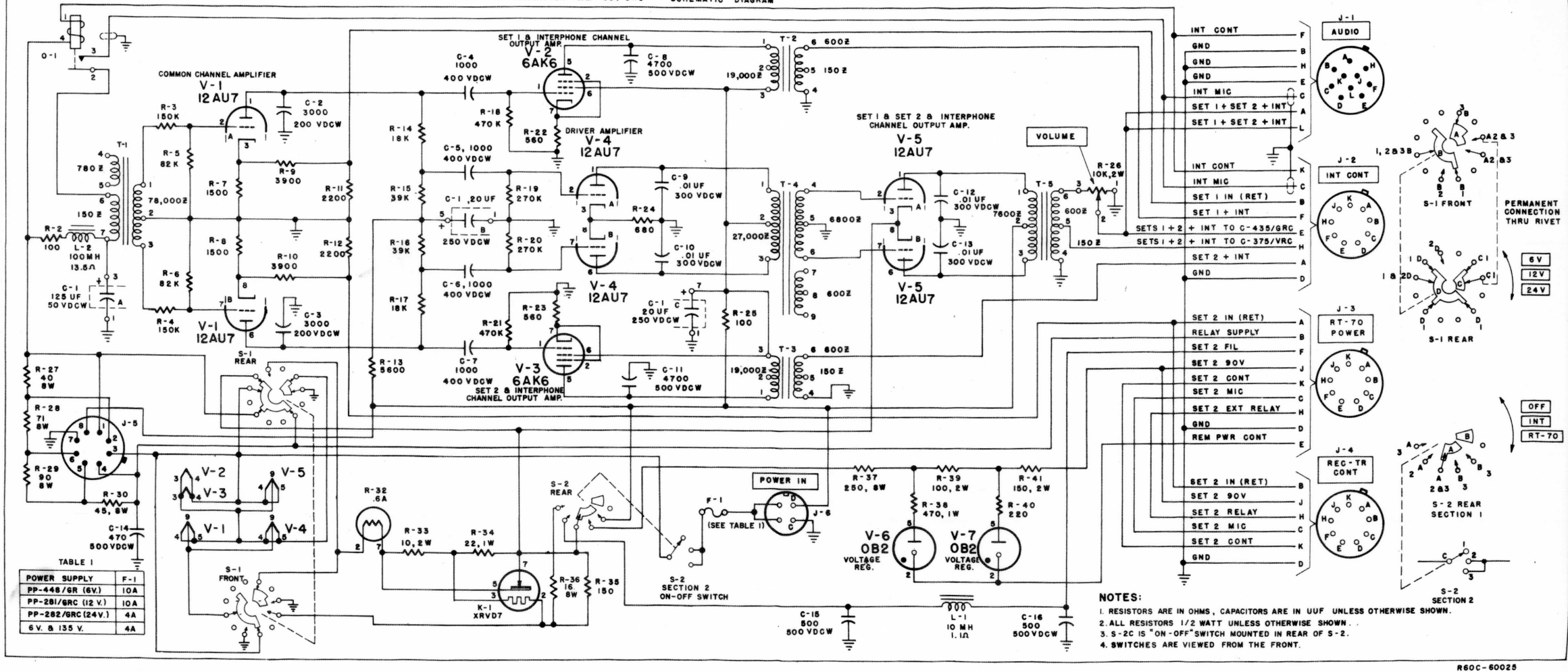

TABLE 1

POWER SUPPLY	F-1
PP-448/GR (6V.)	10A
PP-281/GRC (12 V.)	10A
PP-282/GRC (24V.)	4A
6 V. & 135 V.	4A

NOTES:

1. RESISTORS ARE IN OHMS, CAPACITORS ARE IN UUF UNLESS OTHERWISE SHOWN.
2. ALL RESISTORS 1/2 WATT UNLESS OTHERWISE SHOWN.
3. S-2C IS "ON-OFF" SWITCH MOUNTED IN REAR OF S-2.
4. SWITCHES ARE VIEWED FROM THE FRONT.